INVITATION TO BID

Bidding package No:	**VT-3669/25-XL-DA-VPL**
Title of bidding package:	**OIL DRAIN PUMP FOR BK-10A (Block 09-1)**
Project:	**Block 09-1**
Issued on:	24 / 10 /2025
Bid closing time:	**09:00 AM date 13 / 11 / 2025**
Issued including Decision:	13443/25-HSMT-PTM/BMĐH

Văn bản này được xác thực tại https://eoffice.vietsov.com.vn với số định danh: 13443/25-HSMT-PTM/BMĐH

CONTENTS

Brief description

Abbreviation

Part 1 – BIDDING PROCEDURES

Chapter I. Instructions to bidders

Chapter II. Bidding data sheet

Chapter III. Bid proposal evaluation criteria

Chapter IV. Bidding form

Part 2 – SCOPE OF SUPPLY REQUIREMENTS

Chapter V. Scope of Supply Requirements

Part 3 – CONDITIONS OF CONTRACT AND CONTRACT FORMS

Part 4 – APPENDICES

Văn bản này được xác thực tại https://eoffice.vietsov.com.vn với số định danh: 13443/25-HSMT-PTM/BMĐH

BRIEF DESCRIPTION

Part 1. BIDDING PROCEDURES

Chapter I. Instructions to bidders

This Chapter provides information to help bidder in preparation of Bid Proposal. Information includes rules of preparation, submission of Bid Proposal, bid opening, bid evaluation and contract award. Chapter I contains provisions that are to be used without modification.

Chapter II. Bidding data sheet

This Chapter specifies in detail contents of Chapter I for applying for each bidding package.

Chapter III. Bid Evaluation criteria

This Chapter includes criteria for evaluation of Bid Proposal.

Chapter IV. Bidding forms

This Chapter includes forms that bidder shall complete to form a part of Bid Proposal.

Part 2. SCOPE OF SUPPLY REQUIREMENTS

Chapter V. Scope of Supply Requirements

This Chapter includes scope, progress of goods supply, technical requirements, drawing for description the specification of goods and related services; contents on inspection and testing of goods (if any).

Part 3. TERMS AND CONDITIONS OF CONTRACT AND CONTRACT FORMS

Chapter VI. General Conditions of Contract

This Chapter includes general conditions applied for all contracts of various bidding packages. Chapter VI contains common provisions that are are completed by awarded bidder before contract comes into effect.

Chapter VII. Particular Conditions of Contract

This Chapter includes contract data and specific conditions, which specifies detailed conditions for each contract. Particular conditions of contract are to be modified and supplemented but not to replace general conditions of Contract.

Chapter VIII. Contract forms

This Chapter includes forms which, once completed, shall become integrated part of contract. Templates of contract performance guarantee (Performance Bond) and Advance payment guarantee (if any) are completed by awarded bidder before contract comes into effect.

Part 4. APPENDICES

- Scope of Supply
- Technical requirements
- Technical evaluation criteria
- Other technical documents…. with link for reference (if any).

Văn bản này được xác thực tại https://eoffice.vietsov.com.vn với số định danh: 13443/25-HSMT-PTM/BMĐH

ABBREVIATION

ITB	Instructions to Bid
BDS	Bid data sheet
GCC	General conditions of contract
PCC	Particular conditions of contract
VND	Vietnam Dong
USD	US Dollar
EUR	European currency

Văn bản này được xác thực tại https://eoffice.vietsov.com.vn với số định danh: 13443/25-HSMT-PTM/BMĐH

Part 1. BIDDING PROCEDURES

Chapter I. INSTRUCTIONS TO BIDDERS

1. Scope of bid	1.1. Employer as specified in the Bid Data Sheet (BDS) issues this Invitation to Bid for selection of Bidder to implement bidding package for procurement of goods folowing single-stage one-envelope procedure. 1.2. Title of the bidding package; number, quantity of parts (in case bidding package is divided into many independent parts) belongs to bidding package as specified in BDS.
2. Explanation of terms used in bidding	2.1. The Deadline for bid submission is the deadline for submission bids and is specified in the Invitation to Bid. 2.2. Day refers to Gregorian calendar day, including weekends, holidays, and Tet holidays according to the provisions of labor law. 2.3. Time and day, month on the national bidding network shall be defined time and day, month published the national bidding network (GMT+7).
3. Source of Funds	Source of funding (or method of capital arrangement) for bidding package as specified in **BDS.**
4. Prohibited acts in bidding	4.1. Offering, giving, receiving or taking a bribe. 4.2. Abusing positions or entrusted power to influence or illegally intervene in bidding process in any form. 4.3. Collusive practice, including: a) Reaching, with or without undue influence, an arrangement or agreement which is designed to let one or more parties to prepare bids for all bidders or to withdraw submitted bids so that one of them will win the bid; b) Reaching an arrangement or agreement on refusal to supply goods or services, or subcontract, or reaching other agreements to limit competition so that one party will win the bid; c) A bidder or investor with appropriate qualifications and experience has submitted a bid and meets the requirements laid down in the Invitation to Bid but deliberately refuses to provide additional documents proving their capacity and experience at the Vietsovpetro's request for clarification of the bid or verification of their submitted documents with the aim of facilitating one party's winning of the bid. 4.4. Fraudulent practice, including: a) Forging or falsifying information and/or documents used in bidding; b) Deliberately providing information and documents which are not accurate or objective in bids or proposals with the aim of falsifying the contractor selection result. 4.5. Obstructive practice, including: a) Destroying, deceiving, altering or concealing of evidence or making false statements; threatening, harassing or intimidating any party to prevent the verification or investigation into a corrupt, fraudulent or collusive practice made with a supervision, inspection or audit authority;

Văn bản này được xác thực tại https://eoffice.vietsov.com.vn với số định danh: 13443/25-HSMT-PTM/BMĐH

	b) Obstructing the competent person, employer, Vietsovpetro, bidders in the course of contractor selection; c) Impeding competent authorities' rights of supervision, inspection or audit of bidding activities; d) Deliberately making false complaints, denunciations or petitions with the aim of impeding bidding process; đ) Acts of violation against laws and regulations on cybersecurity and safety intended to intervene or impede the online bidding process. 4.6. Inequality and non-transparency, including: a) A bidder of a package or investment project is also the Vietsovpetro or employer or takes charge of performing tasks of the Vietsovpetro or employer of that package or investment project, violating against the regulations stated in Point 5 ITB b) A person or entity concurrently engages in the preparation and appraisal of Invitation to Bid, or RFP of the same package or investment project; c) A person or entity concurrently engages in the evaluation of bids or proposals and the appraisal of the contractor selection result of the same package or investment project; d) A person who is working for the Vietsovpetro/employer directly engages in the contractor selection, or acts as a member of the expert team or appraising team in charge of appraising the contractor selection result, or is a competent person or head of the Vietsovpetro/employer, for a package or investment project for which his/her family relative, as defined in the Law on enterprises, directly submits a bid or acts as the legal representative of a bidder; đ) A bidder submits a bid for a procurement, construction or non-consulting service package for which the bidder is also acting as a consultant on preparation, verification and appraisal of cost estimate, technical design, building drawings and designs, front-end engineering design (FEED); preparation and appraisal of Invitation to Bid; evaluation of bids; inspection of goods; appraisal of contractor selection result; supervision of contract execution; e) A person acts as a bidder for a package of a project or investment project of the Vietsovpetro or employer for which he/she worked and held the executive or managerial position within 12 months from the date of his/her resignation therefrom; g) A supervision consultant also acts as the inspection consultant of the same package; 4.7. Unauthorized disclosure of the following information and documents on the contractor/investor selection: a) Contents of bidding documents before they are issued as prescribed; b) Contents of Bids, notebooks, minutes of bid evaluation meetings, comments and evaluations for each Bids before publishing contractor selection result;

Văn bản này được xác thực tại https://eoffice.vietsov.com.vn với số định danh: 13443/25-HSMT-PTM/BMĐH

	c) Content of request for clarification of Bid proposals of the Vietsovpetro and responses of bidders during the evaluation process of Bid proposals before publising the bidder selection result; d) Report of the Vietsovpetro, report of the Expert Group, appraisal report, report of consulting bidder, report of relevant professional authorized organization during the bidder selection process before publishing the bidder selection result; đ) The bidder selection result before being published arcording to regulation as prescribed; 4.8. Illegal transfer of awarded contract: a) The contractor transfers to other contractor(s) a workload of task of the package worth more than 10% of package value; or worth less than 10% of package value but more than 02 million USD (after deducting the workload of the subcontractor's responsibility as declared in the contract), calculated on the signed Contract price.
5. Eligibility of bidders	A bidder that is an organization shall be deemed to be eligible if complying the following requirements: a) It is requried to have registration of establishment and operation issued by the competent authority of the country where the bidder is operating. b) It must keep independent accounting records; c) It is not undergoing dissolution process or subject to revocation of enterprise registration certificate, cooperative/cooperative union/ artel registration certificate; is not facing insolvency as prescribed by the law on bankruptcy; d) It must ensure competitiveness in bidding as prescribed in Point BDS; e) It is not being prohibited from participating in bidding; f) It is not liable to criminal prosecution; g) It is not the state of temporary suspension, termination of participation in national bidding network; h) Its name is registered on National bidding network before the grant of approval for contractor selection result as prescribed in BDS.
6. Contents of Invitation to Bid	6.1. The Invitation to Bid consists of Parts 1, 2, 3, 4 accompanied with documents of Bid Proposal amendment as specified in ITB 7 (if any) including as follows: Part 1. Bidding Procedures: - Chapter I. Instructions to Bidders (ITB); - Chapter II. Bidding Data Sheet (BDS); - Chapter III. Bid Proposal Evaluation Criteria; - Chapter IV. Bidding Forms. Part 2. Scope of Supply Requirements: - Chapter V. Scope of Supply Requirements. Part 3. Conditions and Forms of Contract: This part includes the terms, conditions, data and forms that constitute the complete contract. Part 4. Appendices

Văn bản này được xác thực tại https://eoffice.vietsov.com.vn với số định danh: 13443/25-HSMT-PTM/BMĐH

	6.2. Vietsovpetro is not responsible for the preciseness, completeness of the Invitation to Bid, explanation for clarification documents or amendment of Invitation to Bid as prescribed in ITB 7 if these documents are not provided by Vietsovpetro. In case of any contradiction, documents issued by Vietsovpetro shall prevail. 6.3. The bidder shall examine all instructions, forms, supply requirements and other requirements in the Invitation to Bid for preparation Bid Proposal including all information or documentation as required by the Invitation to Bid.
7. Clarification, Amendment of Invitation to Bid	7.1. The amendment of the Invitation to Bid shall be made as prescribed in **BDS** prior to the deadline for submission of bid proposal by issuing the written documentation for amendment in accordance with the methods as prescribed in **BDS**. To give bidders reasonable time in preparing their bid proposal, Vietsovpetro may, at its discretion, extend the deadline for the submission of bid proposals. 7.2. Any bidder who needs clarification of the ITB shall send a written request to Vietsovpetro in a minimum period of time as presribed in the **BDS** prior to date of Deadline for bid submission in order that Viesovpetro shall take consideration. After receiving the written request for clarification by the deadline, Vietsovpetro shall make a written clarification response in a minimum period of time as prescribed in **BDS**, that specifying clarification content request without specifying the name of the requesting bidder, and send it to every bidder who have received the ITB from the Vietsovpetro. If the clarification leads to amendment ITB, Vietsovpetro shall amend the ITB in accordance with ITB 7.1. 7.3. If necessary Vietsovpetro hold pre-bidding conference to discuss the contents in Bidding Document in which the bidders are unclear as stiupulated in **BDS**. Vietsovpetro shall send an invitation to the pre-bidding conference to all contractors who have received the Invitation to Bid and post it on the System. The discussion shall be formally recorded as minutes of clarification which shall be sent to all bidders who have bought or acquired Invitation to Bid from Vietsovpetro. 7.4. In case the Invitation to Bid is required to be modified after the pre-tender conference, Vietsovpetro shall issue a written document for amendment as specified in ITB 7.1, minutes of pre-bidding conference is not the amendment of Invitation to Bid. 7.5. No participation in pre-bidding conference or without a confirmation letter that bidder having particiated in pre-bidding conference is not the reason to reject the Bid proposals' bidder.
8. Cost of bidding	The bidder shall bear all costs associated with the preparation and submission of its Bid Proposal. Vietsovpetro shall not be liable for those cost under any circumstances.
9. Language of Bid Proposal	The bid proposal, as well as all correspondence and documents relating to the bid proposal exchanged by the bidder and Vietsovpetro, shall be written in English. Any supporting documents in bid proposal can be written in other languages and concurrently attached with translation in English. In case of no translation, if necessary, Vietsovpetro may ask bidder for supplementation of documents.

Văn bản này được xác thực tại https://eoffice.vietsov.com.vn với số định danh: 13443/25-HSMT-PTM/BMĐH

10. Documents comprising the bid proposal	The Bid Proposal shall comprise of the following: 10.1. Application for bidding in accordance with ITB 11; 10.2. Consortium agreement in case the bidder is Consortium in accordance with Template No.3, Chapter IV – Bidding forms; 10.3. Bid Bond, in accordance with ITB 18; 10.4. Proof documents for eligibility of bidder in accordance with ITB 5; 10.5. Proof documents for eligibility of signatory under the application for bidding, in accordance with ITB 20.3; 10.6. Proof documents for capacity and experience of bidder, in accordance with ITB 16; 10.7. Technical proposals and proof document for adequacy of goods and related services, in accordance with ITB 15; 10.8. Price proposals and price schedules with full information, in accordance with ITB 11, 13; 10.9. Proposals of technical alternatives, in accordance with ITB 12 (if any); 10.10 Other contents as specified in **BDS**.
11. Application for bidding form and price schedules	The application for bidding form and respective price schedules shall be prepared using the relevant forms furnished in Chapter IV, Bidding Forms.
12. Proposals of technical alternatives	12.1. In case Invitation to Bid stipulates in **BDS** for probability of technical alternatives, then those technical alternatives shall be considered. 12.2. Technical alternatives are only considered when main solution meets requirements and bidder is ranked first. In this case, bidder shall provide all information necessary for evaluation of the alternatives by Vietsovpetro, including: notes, drawings, technical specifications, progress of supply, costs and other relevant information. The evaluation of technical alternatives in accordance with Section 5, Chapter III.
13. Biding prices and discounts	13.1.Bidding price stated in the Application for bidding and in the bidding price tables with discounts must comply with the regulations as specified in this Section: a) The bidding prices means the price stated in Application for bidding, including all costs for implementation of bidding package (not including discounts). b) In case the bidding packages is not devided into independent parts, on condition that bidder offers discount, this can be offered directly in Application for Bidding or put in separate letter for discount. Bidder has to specify the content of discount and details of discount allocation into specific items in columns of "List of goods", "Services description". In case details are not provided, the discount is assumed to apply uniformly for all items in the columns of "List of goods", "Services description". Letter for discount (if any) can be submitted with Bid Proposal or separately provided that Vietsovpetro receive prior to Deadline for bid submission. c) Bidder shall submit Bid Proposal for all work described in ITB 1.1 and offer unit prices, extended amount for work specified in columns of "List

Văn bản này được xác thực tại https://eoffice.vietsov.com.vn với số định danh: 13443/25-HSMT-PTM/BMĐH

	of goods", "Services description" in accordance with respective template prescribed in Chapter IV – Bidding forms. In case columns "Unit price" and "Extended amount" are not offered or offered "0", it is assumed that bidder allocates prices of these goods and services into others prices of those in bidding package, bidder is responsible to provide goods, services in accordance with requirements of Invitation to Bid and not receive payment from Vietsovptero during implementation of contract. Bidder is required to offer prices in each Price schedules as prescribed in **BDS**. 13.2. In case bidding package is divided into independent parts and bidder is allowed bidding in each part specified in BDS, bidder is able to bid for one or many parts of bidding package. Bidder has to bid all work of such part which the bidder attends. Should the bidder offer discount, bidder shall specify details and prices of discount in each part as per ITB 1.2. 13.3. The bidder shall be responsible for the bidding price quoted to perform and complete the work in accordance with the requirements as stated in the Invitation to Bid. In case the biddier offer a low unit price in abnormal manner which affecting to the quality of the bidding package, the Vietsovpetro may require the bidder to clarify the feasibility of such abnormal unit price. 13.4. Bidder's bidding price quoted shall include all taxes, fees and charges (if any) in response to tax rates, expenses, fees at the time of 28 days prior to the stipulated deadline for bid submission. In case bidders announce bidding prices not including taxes, fees, charges (if any), bidders' Bid Proposal shall be rejected. 13.5. Bidders offer the bidding price as stipulated in **BDS.**
14. Currencies of Bid and Payment	14.1 The currency of the bid shall be offered in *VND/ USD/ EUR.* Cost incurred inside Vietnam shall be offered in VND. Cost incurred outside Vietnam shall be offered in *VND/ USD/ EUR*. Bidders have to offer by only one currency for a specific work. In case bidding price is offered in foreign currency, bidder has to prove that the respective work has been using foreign currency. 14.2 The currency of payment for work items shall correspond with the currency of bid for those items. Domestic costs are only paid in VND. 14.3 The currency for conversion of different bidding prices from various currencies into unique currency for evaluation and comparison is: VND/USD applying the selling rate stated by Vietcombank on the date when the bid is closed. If all bidding prices are in foreign currency, then bid evaluation and comparison shall be done in USD. In the event that one of bidding prices is in VND, then bid evaluation and comparison shall be done in VND. 14.4 Without prejudice to any terms mentioned above and relevant applicable laws, contract currency for domestic bidders shall be in VND, applying the selling rate stated by Vietcombank on the date when the bid is closed.
15. Documents establishing the conformity of the Goods and	15.1. To establish the eligibility of the goods and related services in accordance with Invitation to Bid, the bidder shall furnish as part of its Bid Proposal the documentary evidence that the goods conform to the technical specifications and standards specified in Chapter V.

Văn bản này được xác thực tại https://eoffice.vietsov.com.vn với số định danh: 13443/25-HSMT-PTM/BMĐH

Related Services	15.2. The term "Goods" is construed including but not limited to machinery, equipment, raw materials, fuel, materials, supplies, accessories; consumables; medical supplies used for medical establishment. 15.3 The term "origin" shall mean as country or territory where produces whole goods or implements final basic processing in case many countries or territories take part in production process of those goods. 15.4 The term "Related Services" including but not limited to the Services such as: warranty, maintenance, overhaul, repair, supply of spare parts or supply of other after sales services like training, technology transfer… 15.5. The documentary evidence responsiveness of the goods and related services may be in the form of documents, drawings, data, and shall consist of a detailed item by item description of the essential technical and performance characteristics of the goods and related services, demonstrating substantial responsiveness of the goods and related services to the technical specification, and if applicable, a statement of deviations and exceptions to the provisions of the Chapter V. 15.6. The bidder shall also provide a list giving full particulars, current prices of spare parts, special tools, etc., necessary for the proper and continuing functioning of the goods during the period specified in the **BDS** following commencement of the use of the goods. 15.7. Standards for manufacturing, production process of material and equipment, as well as references to brand names or catalogue numbers specified by Vietsovpetro in the Chapter V, are intended to be descriptive only and not restrictive to bidder. The bidder may offer other standards of quality, brand names, catalogue numbers, provided that it demonstrates, to Vietsovpetro's satisfaction, that the substitutions ensure substantial equivalence or are superior to those specified in the Chapter V.
16. Documents establishing the capacity and experiences of the bidder	16.1. The bidder shall provide necessary information in templates in Chapter IV – Bidding Forms in order to demonstrate capacity and experiences for performance of contract as specified in Chapter III – Bid Proposal evaluation criteria. The bidder shall prepare original documents for verification with information stated in bidder's Bid proposal if Vietsovpetro requires. 16.2. The documentary evidence of the bidder's capacity to perform the contract if its bid proposal is awared as specified in **BDS**.
17. Period of validity of Bid Proposal	17.1. Bid Proposal shall remain valid not shorter than the period specified in the **BDS**. 17.2. In exceptional circumstances, prior to the expiration of the bid proposal's validity period, Vietsovpetro may request bidders to extend the period of validity of their Bid Proposal. The Bid Bond as also requested shall be extended for 30 days beyond the deadline of the extended validity period. If a bidder refuses to extend its Bid Proposal validity as required, the Bid Proposal shall not be further considered and the Bid Bond shall be returned to bidder. The bidder have accepted Vietsovpetro's extension request shall not be

Văn bản này được xác thực tại https://eoffice.vietsov.com.vn với số định danh: 13443/25-HSMT-PTM/BMĐH

	permitted to modify any contents of its Bid Proposal. The extension request and acceptance or non-acceptance shall be in writing.
18.Bid Guarantee	18.1. When attending the bid, prior to deadline for bid submission, the bidder shall implement bid guarantee and attach it to Bid proposal under the following forms: i) a form unconditional guarantee issued by a bank or financial institution which is legally operating in Vietnam or foreign bank branches established under Vietnamese law; ii) submit a certificate of insurance guarantee issued by a domestic non-life insurance enterprise, or branch of a foreign non-life insurance enterprise established under the Vietnamese law. iii) pay a deposit or bank transfer to VSP's account as specified in **BDS** 18.2. In case the validity of Bid proposal is extended as specified in ITB 17.2, the Bid bond's validity shall be accrodingly extended. In case of consortium bidder, all partners of consortium shall implement the same form of Bid bond. In case of Consortium, the Bid Bond shall comply with one of the following: a) Each Consortium partner shall provide a separate Bid Bond; however, the aggregate amount of Bid Bond submitted by all Consortium partners is not less than the required amount specified in ITB 18.2. If the Bid Bond of any Consortium partner is determined to be invalid, the bid of the Consortium shall not be considered and evaluated further. If any Consortium partner is in breach of the rules resulting in without return of Bid Bond in accordance with point b ITB 18.5, then Bid bond of all Consortium partners shall not be returned. b) All partners of the Consortium shall nominate one partner to arrange a single Bid Bond for itself and all other partners in the Consortium. In this case, the Bid Bond shall be in the name of the Consortium or the name of the partner who arranges the Bid Bond for the entire Consortium provided that the total amount is not less than the required amount in BDS of ITB 18.2. If any Consortium partner is in breach of the rules resulting in without return of the Bid Bond in accordance with ITB 18.5, the Bid Bond shall not be returned. 18.2. Amount, currency and valid period of the Bid Bond shall be as specified in the **BDS**. 18.3. The Bid Bond shall be considered illegitimate in one of following cases: having lower value, with shorter valid period as specified in ITB 18.2, incorrectly states the name of the beneficiary, not original and without legitimate signature, signed before Vietsovpetro issues the Invitation to Bid or accompanied with adverse condition for Vietsovpetro (including not fully committed with content of the Bid Bond Forms – 04A, 04B, 04C in Chapter IV). In case of using a letter of guarantee or certificate of insurance, the letter of guarantee or certificate of insurance must be provided, signed and stamped (if applied) by one of the following: a lawful representative of a domestic credit institution, a branch of a foreign bank established under Vietnamese law, a domestic non-life insurance enterprise, a branch of foreign non-life insurance enterprise established under Vietnamese law. In case of using a letter of guarantee (of deposit/transfer to Vietsovpetro's account), the letter must be signed and stamped by the legal representative of the contractor.

Văn bản này được xác thực tại https://eoffice.vietsov.com.vn với số định danh: 13443/25-HSMT-PTM/BMĐH

	18.4. Unsuccessful bidder shall be returned or released the Bid Bond in the maximum duration specified in the **BDS** since the date for notification of result of selecting bidder. For successful bidder, the Bid Bond shall be returned or released after the bidder furnishes the contract performance guarantee. 18.5. The Bid Bond shall not be returned in one of following cases: a) After the deadline for submission of bids and during the validity period of the bid, the bidder withdraws their Bid proposals or gives a written refusal to perform one or some tasks proposed in their Bid proposals in accordance with the requirements laid down in the Invitation to Bid; b) The bidder performs any of the prohibited acts specified in Point 4 ITB or commits violations of the bidding law resulting in bid cancellation as prescribed in Point 32 ITB; c) The successful bidder fails to furnish the required performance security as prescribed Point 37 ITB; The first ranked bidder is invited to negotiate the Contract. Within seven (07) days from the date of receipt of the invitation to negotiate the Contract from Vietsovpetro, the bidder does not come to negotiate or refuses to negotiate the Contract or offers conditions different from the content in the Bid Proposals or withdrawing commitments in the Bid Proposals resulting to unsuccessful Contract negotiations, the Bid bond shall be not returned to bidder, except in cases of force majeure; d) The bidder fails or refuses to complete the Contract within twenty (20) days from the date of receipt of notification of Bid award from Vietsovpetro, except in cases of force majeure. e) The bidder refuses to sign the Contract within ten (10) days from the date of completion of the Contract, except in cases of force majeure. 18.6. In case the Invitation to Bid is divided into independent parts, bidder may submit the bid bond in either of the two ways as follows: a) A bid bond for all parts that bidder participate in the bidding (the value of bid bond will be equal to the total values of the parts that bidder takes part in). Where the value of bid bond submitted by the bidder is less than the total of values, Vietsovpetro is entitled to decide the application of such bid bond to the parts that bidder takes part in; b) Separated bid bonds for each part that bidder takes part in the bidding. Where the bidder's breach results in a failure to refund the bid bond as stipulated in section ITB 18.5, the failure to refund the value of bid bond shall be calculated on the part violated by the bidder.
19.Deadline for bid submission	19.1. The deadline for bid submission is the time specified in the **BDS**. 19.2. Vietsovpetro may at its discretion, extend the deadline for the submission of Bid Proposal by amending the Invitation to Bid in accordance with ITB 8, in which case all rights and obligations of Vietsovpetro and bidders previously subject to the deadline shall thereafter be subject to the new deadline as extended. 19.3 The bidder submits directly or delivers the Bid Proposal to Vietsovpetro adresss provided that it arrives before deadline for submission of bid specified in the **BDS**. Vietsovpetro receive Bid Proposal of all bidders before deadline for submission of bid, including even if bidder has not bought or received the Invitation to Bid from Vietsovpetro. In such case, the bidder shall pay an amount equal to the selling price of the Invitation to Bid to Vietsovpetro

Văn bản này được xác thực tại https://eoffice.vietsov.com.vn với số định danh: 13443/25-HSMT-PTM/BMĐH

	account prior to the Bid Proposal is received and before the deadline for bid submission.
20. Submission, Withdrawal, substitution, and amendment of Bid Proposal	20.1. The bidder shall prepare Bid Proposal comprising: one original as specified in ITB 10 and some copies with amount mentioned in the **BDS**. The cover of dossier shall be marked clearly "ORIGINAL OF BID PROPOSAL", "COPY OF BID PROPOSAL". In case of amendment, alternative of Bid Proposal, the bidder shall prepare one original and some copies of dossier with amount specified in the **BDS**. The cover of dossier shall be marked clearly "ORIGINAL OF AMENDED BID PROPOSAL", "COPY OF AMENDED BID PROPOSAL", "ORIGINAL OF ALTERNATIVE", "COPY OF ALTERNATIVE". In case of technical alternative in the Bid Proposal specified in ITB 12, the bidder shall prepare one original and some copies with amount mentioned in **BDS**. The cover of dossier shall be marked clearly "ORIGINAL OF TECHNICAL ALTERNATIVE", "COPY OF TECHNICAL ALTERNATIVE OPTION". 20.2. Bidders shall be responsible for the appropriateness of the copies compared to the original. In case of deviation between original and copy but without changing the bidder ranking, the original shall be used for evaluation. In case of deviation between original and copy leading to different results in evaluation of original and the copy, and resulting change in the bidder ranking, the Bid Proposal of that bidder shall be rejected. 20.3. The original of Bid Proposal shall be typed, printed with inerasable ink, with continuous page numbers. The application for bidding form letter, letter of discount (if any), supplementary documents, clarifying the Bid Proposal, price offer list and other forms in Chapter IV – Bidding forms shall be signed and stamped by the bidder's legitimate representative or the bidder's legitimate attorney (if any), in case of attorney, letter of attorney specified in Template 02, Chapter IV – Bidding forms or certified copy of company charter, decision on establishment of branch or other documents to demonstrate power of attorney shall be submitted with the Bid Proposal. 20.4. In case of Consortium bidders, Bid Proposal shall be signed by legal representative of all partners in Consortium or legal partner representating Consortium bidders according to Consortium agreement. In order that all partnerss of Consortium to be legally bound, Consortium agreement must be signed by legal representatives of all partners of Consortium. 20.5. Any words added, written between lines, erased, overwritten shall only be deemed legitimate if having signature nearby or in that page of signatory on the application for bidding letter. 20.6 The envelope of Bid Proposal comprises of original and copies, duly marking "BID PROPOSAL". In case of amendment, alternative of Bid Proposal, then the amended, alternative document (including original and copies) shall be placed in separated envelopes other than the envelope for Bid Proposal, clearly marking "AMENDMENT OF BID PROPOSAL", "ALTERNATIVE BID PROPOSAL".

Văn bản này được xác thực tại https://eoffice.vietsov.com.vn với số định danh: 13443/25-HSMT-PTM/BMĐH

	In case the bidder proposes an alternative technical plan, the entire alternative technical plan, including technical proposals and price proposals, must be contained in separate envlopes from the Bid Proposal envelop, the outside must clearly state "PROPOSED ALTERNATIVE TECHNICAL OPTION". The envelopes: for Bid Proposal; amended Bid Proposal, proposed alternative technical options (if any) must be sealed. Sealing method is according to the bidders' own regulations. 20.7. The envelopes shall: a) bear the name and address of the bidder; b) be addressed to Vietsovpetro in accordance with **BDS**; c) bear title of bidding package in accordance with ITB 1.2; d) bear a warning "not to open before the time and date for bid opening". 20.8. The bidder shall be responsible for aftermath or disadvantages if is not in accordance with this Invitation to Bid such as not sealing or losing seal of Bid Proposal during delivery to Vietsovpetro, not marking right information on envelopes of Bid Proposal as specified in ITB 20.6 and ITB 20.7. Vietsovpetro shall not be responsible for confidentiality of information in Bid Proposal if the bidders do not comply with above requirements. 20.9. Vietsovpetro shall not consider any Bid Proposals submitted after the Deadline for bid submission. Any Bid Proposals received by Vietsovpetro after the Deadline for bid submission shall be declared late submission, be rejected and be returned unopened to the Bidder. 20.10. After submitting the Bid Proposals, the Bidders may amend, replace or withdraw the Bid Proposals by sending a written notice signed by the bidder's legal representative, in case of attorney, a power of attorney letter must be enclosed as prescribed in ITB 20.3. Dossier for amendment or replacement of Bid Proposal must be enclosed with a written notification of the corresponding amendment, replacement and must ensure the following conditions: a) Being prepared by the Bidders and being submitted to the Vietsovpetro in accordance with ITB 20, the dossier containing the notification must be clearly stated "AMENDMENT OF BID PROPOSAL" or "SUBSITUTION OF BID PROPOSAL" or "WITHDRAWAL OF BID PROPOSAL "; b) Being received by Vietsovpetro before the Deadline for bid submission as stipulated in ITB 19. 20.11. The Bid Proposals which the bidder requests to withdraw in accordance with ITB 20.10 shall be returned unopened to the bidder. 20.12. The Bidder is not allowed to modify, replace or withdraw the Bid Proposal after the Deadline for bid submission until the expiration of the Bid Proposal's validity as stated in the application for bidding form letter or until the expiration of the extended validity of the Bid Proposal.
21.Bid opening	21.1. Except in the cases specified in ITB 20, Vietsovpetro shall publicly open and read out, clearly information in accordance with ITB 21.3 of all Bid Proposal received before the deadline for submission of bids. The bid opening shall take place publicly at time and place specified in the **BDS** in the presence of bidders and representatives of related organizations. The bid

Văn bản này được xác thực tại https://eoffice.vietsov.com.vn với số định danh: 13443/25-HSMT-PTM/BMĐH

	opening does not depend on presence or absence of bidders' representatives attending the bid. 21.2. In case bidder requests withdrawal or substitution of Bid Proposal, Vietsovpetro shall firstly open and read out clearly information in envelope of which outer notification marks "WITHDRAWAL OF BID PROPOSAL", the envelope of Bid Proposal of bidder with request for withdrawal shall remain sealed and be returned unopened to Bidder. Vietosovpetro shall not accept the Bidders' withdrawal of the Bid Proposal and still open such the Bid Proposal if the written notice of "Withdrawal of Bid Proposal" does not include documents providing that the person signing such documents is the bidder's legal representative and must be publicly announced during the bid opening. Next, Vietsovpetro shall open, read out clearly information in envelope of which outer notification marks "SUBSITUTION OF BID PROPOSAL" and this shall be replaced with the previous. This previous shall not be opened and be returned unopened to bidder. Vietsovpetro shall not accept the bidder to replace the Bid Proposal if the written notice of Bid Proposal replacement is not accompanied by documents proving that the person signing the document is the bidder's legal representative and must be made public during the bid opening. For envelope with notification marked "SUBSITUTION OF BID PROPOSAL", any attached notification document accompanied with amended Bid Proposal shall be opened, read out clearly. Vietsovpetro shall not accept the bidder to amend the Bid Proposal if the written notice of Bid Proposal's amendment does not include documents proving that the person signing the document is the bidder's legal representative. Only Bid Proposal opened and read out at the bid opening then shall be considered further and evaluated. 21.3 All the Bid Proposals shall be opened one at a time following the alphabetical sequence of the bidders' names and sequence below: a) Examine the seals; b) Open original of Bid Proposal, amendment of Bid Proposal (if any) and read out clearly at least the following information: name of bidder, quantity of originals and copies, bidding price in letter of bid, bidding price in summarized price list, discount (if any), validity of Bid Proposal, date of contract performance, value, validity of Bid Bond and other necessary information. In case bidding package is divided into many independent parts, then bidding prices and discount for each part shall be read out. Only discount read out in bid opening shall be further considered and evaluated; c) Representatives of Vietsovpetro shall countersign in original of letter of bid, Bid Bond, summarized price list, letter of attorney of bidder's legal representative (if any), letter of discount (if any), Consortium agreement (if any). Vietsovpetro shall not reject any Bid Proposal at the bid opening, except for late submission Bid Propsals as specified in ITB 20. 21.4. Vietsovpetro shall prepare a record of the bid opening that shall include information specified in ITB 21.3. The record shall be signed by representatives of Vietsovpetro and bidders attending bid opening. The omission of a bidder's signature on the record shall not invalidate the contents and effect of the record. The record shall be distributed to all bidders attending the bid.

Văn bản này được xác thực tại https://eoffice.vietsov.com.vn với số định danh: 13443/25-HSMT-PTM/BMĐH

22.Confidentiality	22.1. Information relating to the evaluation of bids and recommendation of contract award shall not be disclosed to bidders or any other persons not officially concerned with the bidder selection process until publication of result of bidder selection. Under no circumstances, is the information in Bid Proposal revealed to any other bidders, except for the information that need disclosing during the bid opening. 22.2. Except for the case of enquiries for clarification of Bid Proposal and comparing documents, bidder is not allowed to contact with Vietsovpetro for issues related to bidder's Bid Proposal and other relevant issues of bidding package during the time from bid opening until the result of tendered selection is published.
23.Clarification of Bid Proposal	23.1. After bid opening, the bidder shall be responsible to clarify the Bid Proposal if required by Vietsovpetro, including eligibility, capacity and experiences of the Bidder. In terms of technical, financial proposal in bidder's Bid Proposal, the clarification shall comply with the principle of not changing the basic content of the submitted Bid Proposal and not changing the offed bidding price. 23.2. During the evaluation process, clarification of Bid proposal between Bidders and Vietsovetro is perform directly in written. 23.3. Clarification of Bid Proposals is only performed between the Vietsovpetro and Bidder whose Bid Proposals need to be clarified. In terms of clarification contents that directly affect evaluation of eligibility, capacity, experiences, technical requirement, financial issues, if period of clarification exceeds deadline and bidder does not submit documentation for clarification or submitted documentation does not comply with requirements of clarification from Vietsovpetro, Vietsovpetro shall evaluate based on the Bid Proposal submitted before deadline for bid submission. Vietsovpetro shall give the Bidder a reasonable period of time to clarify the Bid Proposal. 23.4. In case after deadline for submission of bids, the bidder knowing that the Bid Proposal it has submitted falls short of documents establishing its eligibility, similar contracts, production capacity, financial reports, tax declaration and payment obligations, documents on personnel, specific equipment proposed in its Bid Proposal may provide such evidence to the Procuring entity within a period of time specified in the BDS. The Procuring entity shall receive, consider and evaluate the bidder's additional and clarifying documents, which shall be considered as part of the Bid Proposal. 23.5. In case of any inconsistencies in the Bid Proposal's content or on the condition that the content is unclear, Vietsovpetro request clarification toward the bidder based on compliance as specified in ITB 23.1. 23.6. In case of doubt about the authenticity of documents provided by the Bidder, Vietsovpetro shall verify with organizations and individuals related to the content of the documents. 23.7. In case the Invitation to Bid requires the commitment, Contract Principles for equipment rental, main material supply, warranty, upkeep and maintenance, but such documents are not enclosed in the Bid Proposals, Vietsovpetro shall request Bidders to clarify their Bid Proposals and supplement documents within an appropriate period of time but not less than 03 working days as a basis for evaluation of Bid Proposals.
24.Deviations, Imposing	During the evaluation of bid proposal, the following definitions apply:

Văn bản này được xác thực tại https://eoffice.vietsov.com.vn với số định danh: 13443/25-HSMT-PTM/BMĐH

Conditions and Omissions	24.1. "Deviation" is a difference from the requirements specified in the Invitation to Bid; 24.2. "Imposing Conditions" is the setting of limiting conditions or withholding from complete acceptance of the requirements specified in the Invitation to Bid; 24.3. "Omission" is the Bidder's failure to submit part or all of the information or documentation required in the Invitation to Bid.
25.Determination of responsiveness	25.1. Vietsovpetro's determination of a responsiveness of Bid Proposal is to be based on the contents of the Bid Proposal itself, as defined in ITB 10. 25.2. A substantially responsive Bid Proposal is one that meets the requirements of the Invitation to Bid without material deviations, conditions, or omissions. A material deviation, reservation, or omission is one that: a) If accepted, would affect in any substantial way the scope, quality, or performance of the goods and related services; limit in any substantial way, inconsistent with the Invitation to Bid, Vietsovpetro's rights or the bidder's obligations under the contract; b) If rectified, would unfairly affect the competitive position of other bidders presenting substantially responsive Bid proposal that meet the requirement of the Invitation to Bid. 25.3. Vietsovpetro shall examine the technical aspects of the Bid Proposal submitted in accordance with ITB 15 and ITB 16, in particular, to confirm that all requirements of the Invitation to Bid have been complied without any material deviation or reservation, or omission. 25.4. If the Bid Proposal is not substantially responsive to the requirements of Bidding Document, it shall be rejected; not being allowed to deviations, reservation conditions or omission of basic content in such Bid Proposal with the purpose of making Bid Proposal to be met substantially responsive to the requirements of Bidding Document.
26.Nonmaterial mistake	26.1. Provided that a Bid Proposal is substantially responsive, Vietsovpetro may waive any mistakes in the bid proposal that not to be a material deviation, reservation or omission. 26.2. Provided that a bid proposal is substantially responsive, Vietsovpetro may request that the bidder submits the necessary information or documentation, within a reasonable period of time, to rectify inappropriate points or nonmaterial mistake in the bid related to documentation requirements. The request for provsion of information and documentation to rectify such mistakes shall not be related to any aspect of the bidding price. Failure of the bidder to comply with the request may result in the rejection of its Bid Proposal. 26.3 Provided that a bid proposal is substantially responsive, Vietsovpetro shall rectify quantifiable nonmaterial mistakes related to the bidding price; the bidding price shall be adjusted to reflect the price of a missing or non-conforming item or component; this adjustment is for comparison purposes only.
27.Sub-contractor	27.1. Sub-contractors are organizations, individuals signing contracts with the bidders to perform related services. 27.2. Requirements of Subcontractors are specified in **BDS**. 27.3. Sub-contracting will not change the bidder's responsibilities. The bidders shall be responsible for the workload, quality, progress and other

Văn bản này được xác thực tại https://eoffice.vietsov.com.vn với số định danh: 13443/25-HSMT-PTM/BMĐH

	responsibilities for the parts of the contract carried out by the subcontractors. Sub-contractors' capacity and experiences shall not be considered in evaluation of the Bidder's Bid proposal. The bidder itself must comply with capacity criteria (no consideration of sub-contractors' capacity and experiences). 27.4. The bidder may sign contracts with sub-contractors according to the list of sub-contractors stated in the Bid Proposal or signing contracts with sub-contractors approved by Vietsovpetro to participate in performing the work. 27.5. The bidders is not allowed to utilize the sub-contractors to carry out the tasks other than the tasks of the subcontractors mentioned in the Bid Proposal; the replacement or addition of sub-contractors other than the list of sub-contractors prescribed in the Bid Proposal shall only be carried out when there is a valid and arpprorpiate reason and is approved by Vietsovpetro; in case sub-contractors are utilized to carry out the taks other than the tasks listed in the Bid Proposal that using a sub-contractor with a value of 10% or higher (after deducting the work part of the sub-contractor's responsibility) calculated on the contract price signed, as an act of "bid transfer".
28. Bid preferences in the selection of bidder	28.1. Rules of bid preferences: Bidders shall be granted preferential treatment when supplying goods of which costs for domestic production occupy 25% or higher. 28.2. Bid preferences are applied during evaluation process for comparing and rating Bid Proposal: Goods are eligible for bid preferences provided that bidders prove that domestic production costs account for above 25% of total price. Percentage (%) of domestic production cost of goods is calculated according to the following formula: **D (%) = G*/G (%)** Where: - G*: Domestic production cost calculated by quoted price of goods defined in the Bid Proposal which subtracts tax values and external costs, inclusive of fees and charges (if any); - G: Quoted price of goods defined in the Bid Proposal subtracting tax values; - D: Percentage (%) of domestic production cost of goods, D gains the rate of 25%, which can enable goods to receive the bid preferences as regulated in this clause. 28.3. Bid preferences calculation is specified in the **BDS**. 28.4. Bidder must declare information about the eligible types of goods for bid preferences according to Forms 15A, 15B and 15C Chapter IV that is on the basis of consideration and evaluation of bid preferences. In case bidders does not declare so, the Bidder's goods are considered not eligible for bid preferences. 28.5. In case goods do not receive bid preferences, evaluation and determination of bid preferences shall not be applied. 28.6. In case of bidders ranking equally, priority shall be given to those with:

Văn bản này được xác thực tại https://eoffice.vietsov.com.vn với số định danh: 13443/25-HSMT-PTM/BMĐH

	- Goods originating from the Socialist Republic of Vietnam and the Russia Federation. - Services/Jobs that employ workers from the Socialist Republic of Vietnam and the Russian Federation.
29.Bid Proposal evaluation	29.1. Vietsovpetro shall apply evaluation criteria listed in this clause and methods of evaluation are specified in the **BDS**. Any other criteria and methods of evaluation shall not be allowed. 29.2. Vietsovpetro shall evaluate directly on the bid proposals submitted by the bidder. 29.3. Verify and evaluate eligibility of Bid Proposal: a) The verification and evaluation of eligibility of Bid Proposal as specified in clause 1, Chapter III –Bid Proposal Evaluation criteria; b) Any bidders who have eligibility Bid Proposal shall be further considered and evaluated with respect to capacity and experiences. 29.4. Evaluation of capacity and experiences: a) Capacity and experiences are evaluated as specified in clause 2, Chapter III – Bid Proposal Evaluation criteria; b) Bidders with satisfactory capacity and experiences shall be considered and evaluated to examine their technical capability. 29.5. Technical and price-based evaluation: a) Evaluation of technical capability must adhere to the evaluation standards and methods prescribed in Section 3, Chapter III – Bid Proposal Evaluation criteria; b) Bidders who satisfy technical requirements shall be considered to evaluate the price specified in Section 4, Chapter III – Bid Proposal Evaluation criteria. 29.6. After price-based evaluation, Vietsovpetro shall make and approve ranking list of bidders. The bidder ranked at the first position in the bidder's ranking list shall be eligible for the contract negotiation. Ranking of bidders shall be made as prescribed in the **BDS**. 29.7. In case the Invitation to Bid is divided into independent parts and bidder is allowed bidding in each part prescribed in ITB 1.2, bid evaluation is carried out with those respective parts of the bidder as prescribed in Section 6, Chapter III – Bid Proposal Evaluation criteria. 29.8. Principle of Bid proposal's evaluation: a) Vietsovpetro evaluate directly based on the bid proposals submitted by the bidder. In case the information committed, declared in the Bid proposal is not truthful, leading to false results of evaluating Bid proposal of the bidder, bidder shall be considered to have committed fraudulent; b) In case there is inconsistency between information of similar contract and supporting documents proving information of such similar contract, Vietsovpetro request bidder to clarify the Bid proposal. In case the contracts declared, enclosed in the Bid proposal that not meeting the requirements of Invitation to Bid or the Bidder does not declare or incompletely declares the similar contracts, Vietsovpetro request the bidder to clarify and supplement the another contract to meet the requirements of the Invitation to Bid within an appropriate period of time but not less than 03 working days. In case the bidder does not have a contract met the requirements of the Invitation to Bid, the bidder shall be disqualified; d) In case the key personnel and key equipment (if any) proposed by the contractor in the Bid proposal not meeting the requirements, Vietsovpetro

Văn bản này được xác thực tại https://eoffice.vietsov.com.vn với số định danh: 13443/25-HSMT-PTM/BMĐH

	allow the bidder to supplement or replace. Bidders are only allowed to add or replace each personnel position, equipment once within an appropriate period of time but not less than 03 working days. In case the Bidder does not have the replacement of personnel and equipment that meet the requirements of the Invitation to Bid, the bidder will be disqualified. Under any circumstances, on condition that the Bidder dishonestly declares personnel and equipment, the Bidder is not allowed to substitute other personnel or equipment, the Bidder's Bid proposal shall be rejected and the Bidder shall be considered having committed fraudulent according to regulations with legislation on bidding or other relevant legislation and shall be subject to be handled according to regulations. e) For the origin of the goods, in case there is any inconsistency between the declared information and attached documents, Vietsovpetro request clarification of the Bid proposal; f) For contents other than those mentioned in Points a, b, c and d of this Clause, in case there is inconsistency between the information in the original Bid proposal and the copy of the Bid proposal, the information in the original Bid proposal is the basis for review and evaluation; g) At the financial assessment step, in case the Bidder does not declare information in the bid preferences's form for domestically produced goods (for Goods procurement bidding packages) in order that Vietsovpetro have a basis for calculating bid preferences, then Bidder will not receive the bid preferences;
30.Contract negotiation (NOT APPLICABLE)	Contract negotiation shall be stipulated in **BDS**. 30.1. Contract negotiation shall be based on the followings: a) Report on evaluation of the Bid Proposal; b) Bid Proposal and bidder's records of clarification of bidding package (if any); c) Invitation to Bid. 30.2. Principles of the contract negotiation: a) Not negotiating on the contents the bidder offered in accordance with the requirements of the Invitation to Bid. b) While evaluating Bid Proposal and negotiating contract, if realizing the scope of supply/ work, workloads specified in Chapter V – Scope of Supply are insufficient compared with the design documentation, Vietsovpetro shall request bidder to add supplement scope for this insufficient part, on the basis of the quoted price; if the Bid Proposal has not provided the unit price, Vietsovpetro shall consider and decide on applying the unit price approved estimated price for these scope of work/ inadequate workloads compared to the design documentation or the unit price quoted by other bidders who have passed the technical evaluation if this unit price is lower than the approved unit price in the estimated bidding packge; c) When negotiating a contract for the deficient deviation, if the Bidder's bid proposal does not have a unit price corresponding to the deviation, the lowest bid unit price among other bidders' bid proposals that meet the technical requirements must be taken or taking the unit price in the approved estimate if this is the only bidder who passes the

Văn bản này được xác thực tại https://eoffice.vietsov.com.vn với số định danh: 13443/25-HSMT-PTM/BMĐH

	technical evaluation step as a basis for negotiating that deficient deviation. 30.3. Contents of contract negotiation: a) Unspecified, inappropriate and inconsistent contents between Invitation to Bid and Bid Proposal, between different contents in the Invitation to Bid may lead to incidents, disputes or impact on the contractual obligations of contracting parties; b) Deviations that have been found by the Bidder and Bidder's recommendations (if any), including proposal of amendment or technical alternatives which Bidder is allowed to provide according to relevant bidding regulations; c) Any issue that arises during the selection of Bidder (if any) in the aim of completing detailed contents of the bidding package; d) Nonmaterial omissions specified in ITB 30; đ) Other necessary issues. 30.4. During contract negotiation, negotiating parties must proceed to draft and complete the official agreement, detailed terms and conditions and annexes that determine detailed list of scope of supply, price list and progress of supply. 30.5. If the negotiation fails, Vietsovpetro shall consider, decide to invite the bidder who is ranked at the next positions for contract negotiation; if the successive negotiations also fail, Vietsovpetro shall report to the Investor to consider, decide the bidding cancellation as regulated in point a, ITB 32.1
31. Conditions for recommendation as the awarded bidder	Bidder shall be considered for recommendation as the winning bidder upon satisfying the following conditions: 31.1. Having Eligibility Bid Proposal as prescribed in Section 1, Chapter III; 31.2. Having capacity and experiences satisfying requirements as prescribed in Section 2, Chapter III; 31.3. Having technical proposals satisfying requirements as prescribed in Section 3, Chapter III; 31.4. Having deficient deviation not exceeding 10% of bidding price; 31.5. Meeting requirements specified in the **BDS**; 31.6. The bidder has the proposed price award (including taxes, fees, charges (if any) not exceeding the approved bidding package price. If the approved estimated budget of bidding package is lower than or higher than the approved bidding package price, this estimate shall replace the bidding package price as basis for consideration for recommendation as the winning bidder.
32. Bidding cancellation	32.1. Vietsovptro shall notify the bidding cancellation in following cases: a) All Bid Proposals fail to satisfy the requirements of the Invitation to Bid; b) Change of the objectives, scope of procurement resulting in changes in volume of work and evaluation criteria stated in the Invitation to Bid at Vietsovpetro's decision; c) The Invitation to Bid fails to comply with legislation on bidding or other relevant legislation that lead to the failure of the selected bidder to meet requirements for performing bidding package;

Văn bản này được xác thực tại https://eoffice.vietsov.com.vn với số định danh: 13443/25-HSMT-PTM/BMĐH

	d) The award bidder commits prohibited acts specified in section 4 prohibited acts - Chapter I Instructions to Bidders. e) Organizations and individuals other than the awarded bidder commit prohibited acts specified in section 4 prohibited acts - Chapter I Instructions to Bidders leading to deviations in bidder selection results. 32.2. Organizations and individuals infringing law on bidding that lead to bidding cancellation as prescribed in point c, d, e in ITB 32.1 is undertaken to compensate expenses for related parties and be handled as prescribed by law. 32.3. In case of bidding cancellation specified in this section, Vietsovpetro shall return or release Bid Bond to bidders who has submitted the original Bid Bond within 05 working days, except the bidder violates the regulation as specified in point d and point đ, ITB 32.1.
33.Notice of bidder selection result	33.1. Vietsovpetro shall publish notice of bidder selection results within 05 working days from the date of approval of bidder selection results. Notice of bidder selection result shall include following contents: a) Information of the bidding package: - Number of Invitation to Bidder; - Name of the bidding package; - Bidding package price or approved estimate (if any); - Name of Investor; - Form of bidder selection; - Type of contract; - Time to implement the bidding package; - Time of contract performance. b) Information of the awarded bidder: - Tax code; - Contractor name; - Bidding price; - Bidding price after discount (if any); - Technical scores (if any); - Evaluation price (if any); - Awarded bidding price; - Time to implement the bidding package. c) For each type of goods and equipment in the bidding package, the Investor must publish the following information: - Goods name; - Wattage; - Features and technical specifications; models, part numbers, labels; - Origin; - Awarded of bidding unit price. d) List of unselected bidders and brief reasons of each bidder for not being selected. 33.2. In case of bidding cancellation as prescribed in point a, ITB 32.1, in the notice of bidder selection results and on the national bidding network must be clearly stated the reason for cancellation of bidding.
34.Change in volume of	34.1. At the time of awarding contract, Vietsovpetro are entitled to increase or decrease the volume of services stated in Chapter IV provided that such change not exceeding the rate specified in the **BDS** and there is not any

Văn bản này được xác thực tại https://eoffice.vietsov.com.vn với số định danh: 13443/25-HSMT-PTM/BMĐH

goods and services	change in the unit price or other terms and conditions of the Bid Proposals and Invitation to Bid. The rate of increase and decrease in volume shall not exceed 10%. 34.2. Additional purchase option: Before the contract expires, the Investor has the right to purchase an additional volume of goods or services in the bidding package other than the volume stated in Chapter IV provided that not exceeding the rate specified in the **BDS**.
35.Notice of Bid Proposal acceptance and contract award	After publishing the notice of bidder selection results, Vietsovpetro send a notice of acceptance of the Bid proposals and award the contract, including requirements on measures of contract performance guarantee, completion time, and contract signing. VND according to the provisions in Form as prescribed in Part 4 for the awarded bidder. Notice of acceptance of bid proposals and contract award are part of the contract documentation. In case the awarded bidder fails to complete, sign the contract or submit the contract performance guarantee within the deadline stated in the notice of bid proposal's acceptance and contract award, the bidder shall be disqualified and shall not be refunded the value of Bid bond as prescribed in Section 18.5 ITB. The period of time stated in the notice of bid proposal acceptance is calculated from the date Vietsovpetro sending this acceptance notice to the awarded bidder on the nation bidding network.
36.Conditions for signing contract	36.1. At time of signing contract, Bid Proposal of the selected bidder are still valid. 36.2. At time of signing contract, the selected bidder must ensure to meet requirements on technical and financial capability for implementation as prescribed in the Invitation to Bid. If the bidder no longer meets basic requirements of technical and financial capability prescribed in the Invitation to Bid, Vietsovpetro shall refuse to sign contract with the bidder. Vietsovpetro shall therefore cancel previous decision on approval of bidder selection result and contract award, and shall invite the bidder who is ranked at the next position for comparing documentation and contract negotiation (if required). 36.3. Vietsovpetro shall ensure conditions on funding for advance payment, payment funding and other necessary conditions for carrying out the bidding package on the schedule.
37.Contract performance guarantee	37.1. Before signing a contract or before the contract comes into effect, the bidder shall provide contract performance guarantee as specified in Part 3. In case of applying a form of contract performance guarantee, the form specified in Part 3 or another form approved by Vietsovpetro shall be complied. 37.2. The bidder shall not be entitled for the returning of the contract performance guarantee in the following cases: a) The bidder refuses to perform the contract after the date the contract comes into force; b) The bidder violates agreements in contract; c) Performing the contract behind schedule due to bidder's fault but refusing to extend the validity of the contract performance guarantee.

Văn bản này được xác thực tại https://eoffice.vietsov.com.vn với số định danh: 13443/25-HSMT-PTM/BMĐH

38. Handling of Complaints in Bidding	38.1. When bidder's legal rights and interests are affected, the bidders, agencies and organizations may file any complaint to Vietsovpetro with respect to procurement process, bidder selection result according to the regulations of Vietsovpetro. 38.2. In case of petition to Vietsovpetro, the bidder shall send the petition to the address specified in the **BDS**.
39. Monitoring, supervising of Bidder selection process	When detecting violated behavior or content inconsistent with the provisions of bidding law, the bidder is responsible for notifying the organization, individual performing the monitoring task and supervision as prescribed in the **BDS**.
40. The Employer (Vietsovpetro's) responsibility	In the event that the project is not approved by the competent authority, the Employer has the right to cancel the bidding process and shall not be responsible for any costs incurred the bidders in relation to their participation in the bidding

Văn bản này được xác thực tại https://eoffice.vietsov.com.vn với số định danh: 13443/25-HSMT-PTM/BMĐH

Chapter II. BIDDING DATA SHEET

ITB 1.1	Name of Investor: **Vietsovpetro.**
ITB 1.2	Title of bidding package: **Oil Drain Pump for BK-10A (Block 09-1) (Bidding package no. VT-3669/25-XL-DA-VPL)** **Quantity and part number of parts in bidding package: Vietsovpetro will perform evaluation and selection for Whole package.** Year of production: See Attachment 01 of PART 4. Scope of Supply: See Attachment 01 of PART 4. Technical requirement see Attachment 01 of PART IV. Technical Evaluation Criteria see Attachment 02 of PART IV.
ITB 3	Source of funding (or method of capital arrangement): Block 09-1.
ITB 5 (d)	Competitiveness in the bidding must be ensured by following rules: - Bidders participating in bidding do not have a shareholding or equity contribution representing more than 30% with: Vietsovpetro, except in the case of: (i) The bidder is an affiliate or subsidiary of a state-owned corporation or group whose main production and business lines are consistent with the nature of the bid package of that state-owned corporation or group. (ii) The bidder is a parent company, subsidiary, or affiliate of a state-owned corporation or group whose main production and business lines are suitable for products and services under the bid package, and this bid package belongs to its subsidiary or affiliate. - The bidder do not either have a shareholding or equity contribution relationship with consultants or have a shareholding or equity contribution representing more than 20% of equity owned by a third party being an entity or a natural person, specifically as follows: + Consulting on preparation for technical design: Not applicable; + Consulting on verification of bid price: Not applicable; + Consulting on supervision of contract execution and inspection: Not applicable; + Consulting on preparation for the BD: Not applicable; + Consulting on appraisal of the BD: Not applicable; + Consulting on evaluation Bid Proposals: Not applicable; + Consulting on appraisal of bidder selection results: Not applicable; + Project management consulting, contract management, other consulting services whose work is directly related to the bid package: Not applicable; - The bidder does not belong to the same agency or organization directly managing the consultants (mentioned above)[1]. - Public sector entities and employers, procuring entities that have the same direct governing authority, and equity contribution when participating in bidding for each other's bid packages shall not have to satisfy the regulations on legal and financial independence between the bidder and the employer and the procuring entity.

[1]Only evaluate this content for bidders that are public sector entities.

Văn bản này được xác thực tại https://eoffice.vietsov.com.vn với số định danh: 13443/25-HSMT-PTM/BMĐH

	- Public sector entities and enterprises that have the same direct governing authority, and equity contribution when participating in bidding for each other's bid packages shall not have to satisfy the regulations on legal and financial independence between the bidder and the employer and the procuring entity. - The ratio of shares, equity contributions between the parties is determined at the deadline for submission of bids and according to the ratio stated in the business registration certificate, establishment decision, and other documents of equivalent value. In case the bidder participates in the bidding as a joint venture or the consultant is selected as a joint venture, the equity ownership ratio of other organizations and individuals in the joint venture is determined according to the following formula: $$\text{Ownership ratio} = \sum_{i=1}^{n} X_i \times Y_i$$ Of which: $X_{i:}$ Equity ownership ratio of other organizations and individuals in the i-th joint venture member; $Y_{i:}$ Percentage (%) of the work volume of the i-th joint venture member in the joint venture agreement; n: Number of members participating in the joint venture.
ITB 5 (h)	Bidder's name is registered on National bidding network before the grant of approval for contractor selection result as prescribed: - Bidders have to register procurement information on the National bidding network: **To be applied** - Bidders are to provide confirmation of information registration on the national bidding network system in according to the Circulars issued by Ministry of Planning & Investment for providing provisions on posting information about biding, on the roadmap for applying online Contractor selection, and managing the use of the value of bidding guarantee, ensuring the performance of non-refundable contracts: Detailed instructions of the National bidding network system are on the website: http://muasamcong.mpi.gov.vn.
ITB 7.1	The amendment of Invitation to Bid shall be published in National bidding network at least **03 working days** prior to the Deadline for bid submission.
ITB 7.2	Requests for clarification should be received by Vietsovpetro at least **05 working days** prior to the Deadline for bid submissions. Vietsovpetro shall shall clarify the request of clarification at least **02 working days** prior to Deadline for bid submissions.
ITB 7.3	Pre-bidding conference: No
ITB 8	Payment for the Invitation to Bid: Interested bidders can buy Invitation to Bid with non-refundable cost of VND 500,000.00/set (in word: Five hundred thousand Vietnam Dong/set). Payment for Invitation to Bid shall be made by Telegraphic Transfer to the following Vietsovpetro's account:

Văn bản này được xác thực tại https://eoffice.vietsov.com.vn với số định danh: 13443/25-HSMT-PTM/BMĐH

	Account No. 008.100.000001.1 Beneficiary: Vietsovpetro VIETCOMBANK, Vung Tau Branch Please indicate: Bidder Name, payment for Bidding package No. […]
ITB 10.10	The Bidder shall submit the following additional documents in its bid proposal: Scope of supply, scope and work and Technical Documentation as required Technical Requirement (Section Part 2 Chapter V: Scope of supply, Scope of works and Technical documents, etc. in ITB).
ITB 12.1	Bidder is allowed to submit Technical alternative. The bidder is required to clearly state the **main offer** and the **alternative offer** in the bidding proposal. Technical alternatives are only considered when main solution meets requirements and bidder is ranked first. In this case, bidder shall provide all information necessary for evaluation of the alternatives by Vietsovpetro, including notes, drawings, technical specifications, progress of supply and other relevant information.
ITB 13.2	The parts of bidding package: Following ITB 1.2
ITB 13.5	In the detailed price quotation table, bidder shall offer prices according to the following requirements: **For foreign bidders:** The Bidders are requested to offer price on delivery term: **CFR Vietsovpetro port**, Ho Chi Minh City, S.R. Viet Nam in accordance with Incoterms accompanied with appropriate amendments - if necessary as Bidding form No.12A, Chapter IV- Bidding form and provide "Incoterms 2020". In case goods are accompanied with services, commissioning…. Bidders have to clearly state that whether the offered price includes Foreign Contractor Withholding Tax (FCWT) as Bidding form No.13. If the offered price has not included, Vietsovpetro will calculate and add FCWT into the offered price for comparison and evaluation *(FCWT tax rate is: 1.01% for goods; 15.79% for services; 12.24% for services included in goods).* Vietsovpetro shall do necessary procedures for tax exemption of goods. **For Vietnamese Bidders:** The Bidders are requested to offer price **on delivery to Vietsovpetro warehouse**, Rach Dua Ward, Ho Chi Minh City, S.R. Vietnam **including all taxes, fees and charges** (if any) arisen inside Vietnam and shall be taken into consideration exemption of import tax and VAT for imported goods from using List of exempted goods available for Vietsovpetro in Block 09-1 as Bidding form No. 12A and 12B, Chapter IV- Bidding form.
ITB 15.6	Expected operating duration of Goods (for the purpose of requirement of spare parts, specialized tools): Not applicable.
ITB 16.2	The documentary evidence of the Bidder's capacity to perform the contract if the bidder win the bid including: Manufacturer's License for sale or the Certificate of Partnership or similar documents: as per Technical requirement, Chapter V in Invitation to Bid.
ITB 17.1	The Bid proposal shall be valid for: **≥ 90 days** from the deadline for bid submission.
ITB 18.2	Contents of Bid Bond: **The amount and currency of the Bid Bond shall be: 666,00 USD / 17.000.000 VND.**

Văn bản này được xác thực tại https://eoffice.vietsov.com.vn với số định danh: 13443/25-HSMT-PTM/BMĐH

	The Bid Bond shall be valid for: ≥ **120 days** from the Deadline for bid submission. In case the Bidder provides the Bid Bond through Deposit/Telegraphic Transfer to the following Vietsovpetro's account: Account: (VND) 008.100.000001.1; (USD) 0081370000029 Beneficiary: Vietsovpetro VIETCOMBANK, Vung Tau Branch
ITB 18.4	The Bid Bond of unsuccessful Bidders shall be returned or released in maximum 14 days from the date of Notification of Bidder selection Result.
ITB 19.1	The **Deadline for bid submission** at: ***See Notice of Bid Invitation and as specified on the national bidding system.***
ITB 20.1	In addition to original of Bid Proposal, the Bidders are requested to submit: + **Technical Proposal part**: **01 original** and **02 copies** + **Financial Proposal part**: **01 original** *(Technical Proposal part and Financial Proposal part shall be sealed in separate envelops)* **+ Copy of soft file: 01 USB** of scanned PDF file of Technical Proposal and **01 USB** of native excel file and scanned PDF file of Financial Proposal. + All of the Proposals shall be sealed and marked as Chapter I point 21.. In case of modification or substitution of Bid Proposal or Technical alternative, the bidders must submit the equal number of copies of modification, substitution or Technical alternative.
ITB 20.7 (a)	Bidders shall submit their Bid Proposals to: Recipients: Vietsovpetro Address: 105 Le Loi Str., Vung Tau Ward, Ho Chi Minh City, S.R. Vietnam
ITB 21.1	The Bid proposal shall be opened publicly at: ***See Notice of Bid Invitation and as specified on the national bidding system*** at the following address: Vietsovpetro, 105 Le Loi Str., Vung Tau Ward, Ho Chi Minh City, S.R. Vietnam
ITB 23.4	Bidders themselves can provide such evidence to the Procuring entity within **03** days from the deadline for submission of bids.
ITB 27.2	Total value of sub-contractor(s) shall not exceed: Not applicable. Specialized sub-contractor: Not applicable.
ITB 28.3	Calculation of preferential treatment: Goods that do not receive bid preferences must add a monetary amount accounting for 7.5% of bidding price after rectification of errors, adjustment of deviations and deduction of discounts (if any) of these goods to the bidding price after rectification of errors, adjustment of deviations and deduction of discounts (if any) of bidders for comparison and ranking.
ITB 29.1	Bid proposal evaluation methods: a. Evaluation of the bidder's capacity and experience: using Pass/Fail criteria b. Technical evaluation: to apply evaluation method using Pass/Fail and score system criteria in accordance with evaluation criteria stipulated in Section III, Chapter III, Bid Proposal Evaluation Criteria c. The price evaluation: to apply lowest price method **for Whole package** in accordance with evaluation criteria stipulated in Section V, Chapter III, Bid Proposal Evaluation Criteria.

Văn bản này được xác thực tại https://eoffice.vietsov.com.vn với số định danh: 13443/25-HSMT-PTM/BMĐH

ITB 29.6	Ranking of bidders: the bidder who has the lowest price **for Whole package** after rectification of errors, adjustment of deviation and deduction of discounts (if any) is ranked the first.
ITB 30	Contract negotiation: **Not applicable**
ITB 31.5	The bidder has the lowest price **for Whole package** after rectification of errors, adjustment of deviation and deduction of discounts (if any).
ITB 34.1	The maximum percentage of work volume may be increased is: Not applicable The maximum percentage of work volume may be decreased is: Not applicable
ITB 34.2	Additional purchase option: Not applicable The maximum of additional purchase option: Not applicable
ITB 38.2	Vietsovpetro's address: 105 Le Loi Str., Vung Tau Ward, Ho Chi Minh City, S.R. Vietnam, Tel: (84 254) 3 839 871, Fax: (84 254) 3 839 857
ITB 39	Address of organization, individual in charge of supervision: Mr. Vu Mai Khanh - General Director of Vietsovpetro 105 Le Loi, Vung Tau Ward, Ho Chi Minh City, S.R. Viet Nam, Fax: 84-254-3839857

Văn bản này được xác thực tại https://eoffice.vietsov.com.vn với số định danh: 13443/25-HSMT-PTM/BMĐH

CHAPTER III: BID PROPOSAL EVALUATION CRITERIA

Section 1: Verification and evaluation the eligibility of Bid Proposal

1.1 Verification the Bid Proposal:

a) Verify the number of original and copies of the bid proposal;

b) Verify the documents comprising the original Bid proposal including: administrative documents, legal documents, Bidder's capacity and experience documents, technical proposal as stipulated in Invitation to Bid, in which there are: Application for Bidding, Consortium Agreement (if any), Power of Attorney for signing Application for Bidding (if any); Bid Bond/ Deposit; documentary evidence establishing the Bidder's eligibility to bid; documentary evidence Bidder's capacity and experience; technical proposal; price proposal and any other relevant documents of Bid Proposal as stipulated in ITB 10;

c) Verify the consistency of contents between the original and copies for detailed evaluation process of bidding package.

1.2 Evaluation the eligibility of Bid Proposal

A Bid proposal is considered eligibility when it fully meets the following requirements:

a) The Bidder submits the original of Bid proposal.

b) The Application for Bidding is signed and stamped (if any) by the legitimate representative of the bidder as required by Invitation to Bid. For consortium, the Application for Bidding is signed and stamped (if any) by the legitimate representatives of each member of the consortium or the authorized leader member of the consortium sign the Application for Bidding according to responsibilities in written agreement of consortium.

c) Bidding prices in Application for Bidding must be detailed, fixed, indicated by numbers, words and in accordance with total bidding prices mentioned in Summary of bidding price table. Bidders are required not to propose different bidding prices or conditions that put Vietsovpetro in disadvantage.

d) The validity period of the Bid proposal must meet the requirements stipulated in ITB 17.1.

e) The Bid Bond/Deposit must satisfy all the requirements as stipulated in ITB 18.3.

f) The bidder is not named in 2 or more Bid proposals as a main bidder (independent bidder or a member of consortium) in one bidding package. In case the bidding package is divided into many independent parts, the bidder is not named in 2 or more Bid proposals as the main bidder for the parts that bidder participates.

g) For consortium, written agreement of consortium is signed and stamped (if any) by the legitimate representative of each member of the consortium and the consortium agreement must specify the detail scope of work and estimated respective percentage that each member will implement as Bidding Form No.3, Chapter IV, Bidding Form.

h) The bidder is eligible as stipulated ITB 5.

Bidders who submit eligible bid proposals shall be considered and evaluated on their capacity and experience.

Section 2: Capacity and experience evaluation criteria

Standards of competence and experience are mandated and listed in Table No. 01 (for bidders who are Non-manufacturers of goods within the scope of the bid package) or Table No. 02 (for bidders who are manufacturers of goods within the scope of the bid package). A bidder's evaluation of competence and experience is subjected to whether it meets all standards. A subcontractor's competence and experience will not be taken into consideration when evaluating a bid proposal. The contractor itself must meet the evaluation standards of competence and experience.

Văn bản này được xác thực tại https://eoffice.vietsov.com.vn với số định danh: 13443/25-HSMT-PTM/BMĐH

In case the currency used in similar contracts or one of the following - Investor's payment confirmation for past contracts for the supply of goods, tax declarations, documents proving the bidder's competence and experience - is not VND: in the bid proposal, the bidder must convert them to VND as a basis for evaluation. The conversion is subject to the exchange rate of *Vietcombank's selling rate* at the date of signing a similar contract.

In case the Bidder participating in bidding is the parent company (for example, Corporation) assigning a subsidiary to perform part of the work in the bid package, the contractor must declare specifically which part using Form No. 11C Chapter IV. The evaluation of experience in fulfilling similar contracts is based on the value and volume of work that the parent company and subsidiary delivered in the bidding package.

For Consortium, capacity and experience will be defined by the aggregated capacity and experience of each member of Consortium, but it must be assured that each member of Consortium must satisfy the requirement of capacity and experience for the volume of work implemented by him; if any of the members in Consortium do not satisfy the capacity and experience criteria, the Consortium will be evaluated as fail to meet the requirement on capacity and experience.

Sub-contractors' capacity and experience will not be considered in the evaluation of the Bid proposal of main Bidder (unless the Invitation to Bid allows to use specialized sub-contractor). The main bidders themselves must satisfy criteria on capacity and experience (not considered the sub-contractors' capacity and experience).

In case application of pre-qualification, if there are changes in capacity and experience when submitting the bid proposal in comparison with the information in the evaluated pre-qualification documents, the bidders must update their capacity and experience; in case there is no change in bidders' capacity and experience, the bidders must send a written commitment that they still satisfy the bidding package's requirements.

If there is no pre-qualification, the evaluation of capacity and experience will be carried out in accordance with the following evaluation criteria, the bidders are considered "pass" the capacity and experience requirements if they satisfy all the criteria.

2.1 Criteria for evaluation of capacity and experience

The evaluation of capacity and experience will be carried out as in following table:

CRITERIA TABLE FOR EVALUATION OF BIDDER'S CAPACITY AND EXPERIENCE

(For Bidders who are Non-manufacturers of goods under the scope of the bid package)

	Criteria on capacity and experience		Compliance Requirements			Documents
No.	Description	Requirement	Single Entity	Consortium		Submission Requirements
				All Members Combined	Each Member	
1	Historical Contract Non-Performance(1) due to Bidder's fault	From *01 January 2022* to the bid submission deadline, non-performance[1] of a contract did not occur due to Bidder's fault	Must meet requirement	not applicable	must meet requirement	Form 09
2	Tax obligations fulfilment	Has fulfilled tax obligations[2] of the latest fiscal year to the Deadline for Bid submission	Must meet requirement	not applicable	must meet requirement	Form 10 Commitment along with the Application for Bidding

Note:

[1] Non performance contracts due to Bidder's fault shall include all contracts where:

Văn bản này được xác thực tại https://eoffice.vietsov.com.vn với số định danh: 13443/25-HSMT-PTM/BMĐH

- Non performance contracts, as concluded by employer, and were not objected by the Bidder,

- Non performance, as concluded by the employer, and were so objected by the Bidder but fully settled against the Bidder by Arbitration or Court.

Non performance shall not include contracts where employer decision was overruled by the dispute resolution mechanism. Non performance must be based on all information on fully settled disputes or litigation, i.e. dispute or litigation that has been resolved in accordance with the dispute resolution mechanism under the respective contract or applicable law and where all appeal instances available to the Bidder have been exhausted.

[2] Bidders provide documents proving that they have fulfilled their tax declaration and payment obligations of the latest fiscal year to the time of bid closing to comparison during negotiations.

Criteria on capacity and experience			Compliance Requirements			Documents
No	**Description**	**Requirement**	**Single Entity**	**Consortium**		**Submission Requirements**
				All Members Combined	**Each Member**	
3	Financial Capacity					
3.1	Financial Performance	Submission of financial statements of the last **03 years** to demonstrate the current soundness of the Bidder's financial position. The Bidder's net worth for the last fiscal year, (calculated as the difference between total assets and total liabilities) should be positive.	Must meet requirement	not applicable	must meet requirement	Form 10
3.2	Average Annual business activities Turnover (excluding VAT)	Minimum average annual turnover (excluding VAT) of following value within the last **03 years** (to the deadline for bid submission)[1]**:** **≥ 66.700,00 USD/ 1.750.000.000 VND** (In case the Bidder established less than 3 years, the value of Average annual business activity turnover will be sum total value of business activity turnover and devide to total number of years have activities)	must meet requirement	must meet requirement	not applicable	Form 10

Notes:

[1] In case of Consortium, The Evaluation of the turnover criteria will be total turnover of all members for compare and evaluation.

Criteria on capacity and experience			Compliance Requirements			Documents
No	**Description**	**Requirement**	**Single Entity**	**Consortium**		**Submission Requirements**
				All Members Combined	**Each Member**	
4	**Experience on implementing Contracts of**	Participation in at least **01 contract** (supplying material/ equipment in oil and gas industry or other	must meet requirement	must meet requirement	must meet requirement	Form 07A

Văn bản này được xác thực tại https://eoffice.vietsov.com.vn với số định danh: 13443/25-HSMT-PTM/BMĐH

	supplying similar goods	industries) as described hereunder that has been **successfully completed**[1] as main Bidder (individually or member of Consortium) or sub-contractor[2] within the last **05 years** (to the deadline for bid submission). The minimum value of the contract is: **≥ 31.200,00 USD/ 820.000.000 VND.**			(equivalent to the volume of work implemented)	

Notes:

[1] "Successfully completed" means completion of all (100%) of contract scope of work.

[2] For contract implemented by bidder as member of Consortium or sub-contractor, only the amount of work implemented by Bidder itself will be considered.

Criteria on capacity and experience			**Compliance Requirements**			**Documents**
No	**Description**	**Requirement**	**Single Entity**	**Consortium**		**Submission Requirements**
				All Members Combined	**Each Member**	
5	The ability of performing warranty, maintenance, repair, overhaul and provision of spare parts and other after-sale services [1] *(To be evaluated in the Technical evaluation stage)*	The bidder must be represented by an Agent (or Representative) who is available to carry out the Bidders' obligations such as warranty, maintenance, repair and provision of spare parts by one of following: - The bidder commits its capability in fulfilling obligations of warranty, maintenance, repair, supply of spare parts or providing after-sales services as required by the Invitation to Bid. *(as per required in the Technical requirement)* - The bidder signs a principle contract with an entity capable of fulfilling the obligations of warranty, maintenance, repair, supply of spare parts or providing after-sales services as required by the Invitation to Bid. *(as per required in the Technical requirement).*	must meet requirement	must meet requirement	must meet requirement (equivalent to the volume of work implemented)	

CRITERIA TABLE FOR EVALUATION OF BIDDER'S CAPACITY AND EXPERIENCE

*(For Bidders who are manufacturers of goods under the scope of the bid package – **NOT APPLICABLE**)*

Văn bản này được xác thực tại https://eoffice.vietsov.com.vn với số định danh: 13443/25-HSMT-PTM/BMĐH

2.2 Evaluation Criteria for Key personnel *(Not applicable*)

2.3 Sub-contractors and Specialized Sub-contractors *(Not applicable*)

Section 3: Technical evaluation criteria (see Part 2, Chapter V)

Section 4: Price evaluation criteria

Lowest price method: ***(Applicable)***

To be evaluated by the lowest price method as the following steps:

Determination of lowest price as following steps:

Step 1: Determination of bidding price including all taxes, fees, charges (if any) arisen inside Vietnam and shall be taken into consideration exemption of import tax and VAT for imported goods from using List of exempted goods available for Vietsovpetro in Block 09-1;

Step 2: Rectification of errors (apply in accordance with Note (1));

Step 3: Adjustment of deviations (apply in accordance with Note (2));

Step 4: Determination of bidding price after rectification of errors, adjustment of deviations, discount deduction (if any);

Step 5: Conversion of bidding price into a single currency (if any);

Step 6: Determination of preferential treatment value (if any) as stipulated in ITB 28;

Step 7: Ranking the bidders: The Bid Proposal which has the **lowest bidding price for Whole package** after rectification of errors, adjustment of deviations, discount deduction (if any), conversion of bidding price into a single currency, addition preferential treatment value (if any), including all taxes, fees, charges (if any) arisen inside Vietnam and shall be taken into consideration exemption of import tax and VAT for imported goods from using List of exempted goods available for Vietsovpetro in Block 09-1 shall be ranked the first.

The following content will be considered in the evaluation and ranking stage of contractors:

During the Bid evaluation stage, for proposal of goods originating from countries affected by armed conflict, in state of war, sanctioned or embargoed, and the importation of those may be interrupted and affect the contract performance and delivery schedule, Bidder must provide explanations and committions on the ability to deliver goods for Vietsovpetro to consider and evaluate.

Based on the actual situation at that time, Vietsovpetro has the sole and exclusive right to review and decide to reject the bids, or not to continue the evaluation, if in the opinion of Vietsovpetro there is any risk to the contract performance and delivery schedule. In that case, the Vietsovpetro at its sole and absolute discretion will have the right to consider and remove these Bidders from the ranking list.

Notes:

(1) Rectification of errors

Provided that the bid proposal substantially satisfies Invitation to Bid, Vietsovpetro shall rectify arithmetical errors and other errors on the following basis:

a) Arithmetical errors include mistakes from calculation such as: addition, subtraction, multiplication, division when calculating bidding price. If there is a discrepancy between the unit price and the total price, the unit price shall prevail and the total price shall be corrected; If there is unusual differences in unit price due to decimal errors (10 times, 100 times, 1000 times), the total price should be used as a legal basis for correction; when the bidder fills without price or "0" in the column of unit price and total price, price of this item shall be deemed to be allocated among the prices for the other items of work of the package and Bidder will not be paid for by Vietsovpetro during contract performance.

b) Other errors:

Văn bản này được xác thực tại https://eoffice.vietsov.com.vn với số định danh: 13443/25-HSMT-PTM/BMĐH

- If the Total price column is filled without the corresponding unit price, the unit price shall be determined by dividing the total price by the quantity; if the unit price is filled in, but the total price is missing, the total price shall be determined by multiplying the quantity by the unit price; if one of the items has the unit price and total price filled in, but the quantity is missing, the quantity shall be determined by dividing the total price by the unit price of that particular item. In case the aforesaid quantity that has been additionally defined is different from the quantity mentioned in the Invitation to Bid, that value difference is the deviation in the scope of supply, which shall be adjusted under regulations specified in Step 3;

-Mistake in Unit must be corrected to meet the requirements specified in the Invitation to Bid;

-Mistakes in using comas (instead of periods) and vice versa shall also be corrected in accordance with the written in Vietnamese customary. If Vietsovpetro determines the obvious mistake in placing of comas and periods, the total price shall prevail and the unit price shall be corrected.

-If there is an error in a total corresponding to the addition of subtotals, the subtotals shall prevail and the total shall be corrected;

-If there is a discrepancy between words and numbers, the amount in words shall used as a legal basis for correction. If the amount expressed in words is incorrect, then the number after rectification of error as stipulated in this article should be used as a legal basis for correction.

(2) Adjustment of deviation:

a) In case of deviation in the scope of supply compared to the Invitation to Bid, what is deficient shall be added, and what is redundant shall be subtracted according to respective unit price in the Bid proposal of bidder that has deviation;

In case of deficient deviation (lack of items of work in comparison with the scope of supply, lack of inland transportation cost to Vietsovpetro warehouse/ Vietsovpetro port in case Bidder does not offer delivery term to Vietsovpetro warehouse/ Vietsovpetro port), if there is no respective unit price in the Bid proposal with deficient deviation, the adjustment of deviation will be as follows:

- **Lack of items of work in comparison with the scope of supply:**

The highest unit price offered for such item of Bid proposals which pass the Technical evaluation shall be used as legal basis for adjustment of deviation. In case the Bid proposals passed the Technical evaluation has no unit price, unit price in the value of bidding package shall be used as legal basis for adjustment of deviation. In case not having value of bidding package, unit price for calculating price of the bidding package shall be used as legal basis for adjustment of deviation.

In case only one bidder passes the Technical evaluation, adjustment of deviation shall be made based on respective unit price in the Bid proposal of this bidder; In case this Bid proposal has no respective unit price, unit price in value of bidding package shall be used. In case not having value of bidding package, unit price for calculating price of the bidding package shall be used as legal basis for adjustment of deviation.

- Lack of inland transportation cost to Vietsovpetro warehouse/ Vietsovpetro port:

In case Bidder does not offer delivery term to Vietsovpetro warehouse/ Vietsovpetro port and not having value/ unit price for inland transportation cost to Vietsovpetro warehouse/ Vietsovpetro port, unit price in the value of bidding package shall be used as legal basis for adjustment of deviation. In case of not having unit price in the value of bidding package, the following rates shall be used as legal basis for adjustment of deviation:

**For [goods such as pipes and metal]: The inland transportation cost = 10.66 USD/ton*

**For [other goods]: The inland transportation cost = 0.25% x Total proposed bid price.*

b) In case bidder has discount letter, rectification of errors and adjustment of deviation shall be made based on bidding price without discount. Percentage (%) of deficient deviation shall be determined on basis of comparison of bidding price in Application for Bidding.

Văn bản này được xác thực tại https://eoffice.vietsov.com.vn với số định danh: 13443/25-HSMT-PTM/BMĐH

Section 5: Technical alternative

Bidder is allowed to submit Technical alternative and requested to identify clearly which is "**The Main offer"** and which is "**The alternative offer**" in the Proposal.

Note: Technical alternatives are only considered when main solution meets requirements and bidder is ranked first. In this case, bidder shall provide all information necessary for evaluation of the alternatives by Vietsovpetro, including notes, drawings, technical specifications, progress of supply and other relevant information.

Section 6: Bidding package with multiple independent parts (Not applicable)

If the bidding package is divided into multiple independent parts as stipulated in ITB 1.2, implement as follows:

1. The evaluation and approval of the winning of bid will be carried out on the basis that the total proposed bid winning prices of the bidding package are lowest (for lowest price method); the total evaluated prices are lowest (for evaluated price method); the total proposed bid winning prices shall not exceed the approved value of bidding package but are not compared to the estimated value of each part.
2. There is one contract if only one bidder wins all the parts of the bidding package. There are many contracts if many bidders win the different parts of the bidding package.

Section 7: The right to unilaterally terminate contract negotiations with the first-ranked contractor in in contract negotiation satge.

For the proposal of goods originating from countries affected by armed conflict, in state of war, sanctioned or embargoed, and the importation of the those may be interupted and affect the contract performance and delivery schedule, explanations and commitments on the ability to deliver goods must be provided by the Bidder for Vietsovpetro to consider and evaluate.

Based on the actual situation at that time, Vietsovpetro will have the sole and exclusive right to review and decide to reject the proposals of those goods, or not to continue the evaluation, if in the opinion of Vietsovpetro there is any risk to the contract performance and delivery schedule. In that case, Vietsovpetro at its sole and absolute discretion will have the right to stop contract negotiation, and the next ranked bidder will be invited to negotiate the contract.

Văn bản này được xác thực tại https://eoffice.vietsov.com.vn với số định danh: 13443/25-HSMT-PTM/BMĐH

CHAPTER IV: BIDDING FORM

No	Bidding Form	Perfor-mance	Responsibility for performance	
			Vietsovpetro	Bidder
1	Form 01. Application for bidding form	Submission with Bid Proposal		**X**
2	Form 02. Power of Attorney			**X**
3	Form 03. Consortium Agreement			**X**
4	Form 04A. Guarantee for Bid Participation *(Bid Bond), applicable to independent bidders*			**X**
5	Form 04B. Guarantee for Bid Participation *(Bid Bond), applicable to consortium bidders*			**X**
6	Form 04C. Form of Deposit for bid participation			**X**
7	Form 05. Bidder's information form			**X**
8	Form 06. Information form for consortium bidders			**X**
9	Form 07A. Similar contract performed by bidder *(applicable to commercial bidders)*			**X**
10	Form 07B. Declaration of goods production capacity *(applicable to bidders who are manufacturers – NOT APPLICABLE)*			**X**
11	Form 08A. Proposed Key Personnel			**X**
11	Form 08B. Profession skill curriculum vitae of key personnel			**X**
12	Form 08C. Professional Experience			**X**
13	Form 09. Historical Contract Non-Performance for the supply of goods due to fault of the bidder in the past.			**X**
14	Form 10. Bidder's Financial Status			**X**
15	Form 11A. Scope of work using sub-contractors			**X**
16	Form 11B. List of specialized sub-contractors			**X**
17	Form 11C. List of subsidiaries and member companies delivering work in the bidding package			**X**
18	Form 12. Summary of bidding prices (Financial Proposal)			**X**
19	Form 12A. Bidding price schedule of goods *(manufactured, processed outside Vietnam)*			**X**
20	Form 12B. Bidding price schedule of goods *(domestically manufactured, processed or goods manufactured, processed outside Vietnam but already imported and being offered in Vietnam)*			**X**
21	Form 13. Bidding price schedule for related services			**X**
22	Form 14A. N/A			**X**
23	Form 14B. N/A			**X**
24	Form 15A. Declaration of goods with bid preferential treatments			**X**
25	Form 15B. Costs of goods manufactured domestically with bid preferential treatments *(in case of declaration for cost of import)*			**X**
26	Form 15C. Costs of goods manufactured domestically with bid preferential treatments *(in case of declaration for cost of manufacturing in Vietnam)*			**X**

Văn bản này được xác thực tại https://eoffice.vietsov.com.vn với số định danh: 13443/25-HSMT-PTM/BMĐH

FORM 01

APPLICATION FOR BIDDING [1]

Date: ……. (*Date of signing application for bidding*)
Name of bidding package:…….. (*Name Package according to Bid Announcement*)
Name of project: …… (*Name project*)
Bid invitation No. :……(*In case of limited tendering*)
Attention to: _____ (*full name and address of employer*)

After studying the Invitation to Bid and the documents for Amendment of the Invitation to Bid [*insert the code of the amendment documents, if any]* that we have received, we *[insert the name of the bidder*] commit to execute [*name of bidding package*] as required by the Invitation to Bid at the total amount of [*specify in number, in words, and currency of bid proposal*] [2] and the summary of bidding price.
In addition, we voluntarily offer a discount with amount: ____ *[specify in number, in words, and currency of bid proposal]*.
The bidding price after application of discount is: ____ *[specify in number, in words, and currency of bid proposal]*.[3]
Validity of the Proposal[4]: ____ [*write the validity period from the deadline for submission of bids in accordance with the BDS]* days, from the deadline for submission of bids.
Bid Security: ___ *[State the value in figures, in words and in currency of the bid security]*
Validity of Bid Security: ____ *[insert validity period from deadline for submission of bids]*
Time for contract implementation: …… (*Total time to perform all work required in Bidding package*)[5]

We commit:

1. We are not in the process of carrying out dissolution procedures or having its business registration certificate, cooperative registration certificate, cooperative union registration certificate, or cooperative group registration certificate revoked, not in a case of insolvency according to the provisions of the law on bankruptcy (not in the process of ceasing operations or having its business household registration certificate revoked for Bidders that are household businesses).
2. We do not violate regulations on ensuring fair competition in bidding.
3. We have fulfilled the tax liabilities of the most recent fiscal year prior to the deadline for submission of bids.
4. We are not being under suspension from participating in bidding according to the provisions of the law on bidding.
5. We are not being prosecuted for criminal liability (the household owner is not being prosecuted for criminal liability in case the bidder is a business household).
6. We do not proceed any practices of corruption, bribe, collusion, obstruction and other violated provisions of the law on procurement when participating this package.
7. The information declared in the bid is truthful.
8. In case of winning the bid, the Proposal and clarification, supplemental documents of the Proposal constitute the agreement of responsibilities between the two parties until the contract is signed.
9. If our bid is accepted, we shall furnish a performance security as specified in IBT 37.1 of the Bidding document.

Legitimate representative of the bidder[6]
(Specify name, title, sign and stamp)

Notes:

Văn bản này được xác thực tại https://eoffice.vietsov.com.vn với số định danh: 13443/25-HSMT-PTM/BMĐH

[1] Application for bidding must be filled with sufficient and accurate information of Vietsovpetro, Bidder, the validity duration of Bid proposal, signed and stamped by legitimate representative of the bidder.

[2] Bidding prices in Application for bidding must be specific, fixed, indicated by numbers, words and in accordance with total bidding prices mentioned in price list. Bidders are required not to propose different bidding prices or conditions that put Vietsovpetro in disadvantage. In case of multiple parts, the Bidder must write the total bidding price of each parts and total bidding price of all parts that bidder participates.

[3] Specify discount for the whole bidding package or for one or many works, items (specify detailed discounted works, items)

[4] The validity of Bid proposal shall be counted from the date of Deadline for bid submission to the last date of validity period as stipulated in the Invitation to Bid. From the time of Deadline for bid submission until 24:00 of the date which has the deadline for bid submission is considered as one day.

[5] Duration of contract implementation in Application for bidding must be in accordance with Technical proposal and completion schedule specified in the Bid Proposal.

[6] If legitimate representative of bidder authorizes the subordinate to sign the application for bidding, the bidder must submit Power of Attorney according to Form No.2 of this Chapter; if the company's Charter/regulations or other related documents have the assignment of responsibilities to subordinates to sign application for bidding, the bid proposal must include these documents (no Power Of Attorney is required in accordance with Form No.2 of this Chapter).

For consortium, the application for bidding must be signed by the legitimate representative of each member of the consortium, except in Consortium agreement (as in Form No.3 of this chapter), the members of Consortium agree to authorize the leader member of the consortium to sign the Application for bidding. If each member of consortium has its own authorization, apply as for independent bidders. If the bidder wins the bidding package, the bidder must present to the Employer the notarized/certified copy of these documents before signing the contract. If the information declared is not accurate, the bidder is considered violation of ITB 4.

Văn bản này được xác thực tại https://eoffice.vietsov.com.vn với số định danh: 13443/25-HSMT-PTM/BMĐH

FORM 02

POWER OF ATTORNEY [1]

Date_____/_____/20_____ At (*name of place*)……:
I,.....[*insert Name, ID/passport number, position of Legitimate representative of the bidder*], the Legitimate representative of _____[*insert the bidder name*] at_____ [*insert address*]
To issue this Power of Attorney to :

Mr/Mrs_____
ID/Passport number_____
Position_____
To do, execute and perform the following acts and things during the process of participating the Bidding package _____(*Name of Bidding Package*) of Project_____(Name of project) held by Vietsovpetro**:**

[-Sign the Application for bidding form;
-Sign the Consortium agreement (if any);
-Sign all documents, correspondences to Vietsovpetro during the bidding process, including the written requests to clarify Invitation to Bid, written clarification of Bid proposal, or written requests to withdraw, modify or substitute the bid proposal;
-Negotiate and finalize contract with Vietsovpetro;
-Sign the Bidder's arising claims (if any);
-Sign contract with Vietsovpetro (if awarded the Bidding package)] [2];

The Attorney shall lawfully perform acts within the scope of Power of Attorney as the legitimate representative of _____(*name of bidder*).
The Mandator, [*name of Legitimate representative of the bidder*] () will be completely responsible for acts performed by the Attorney,_____[*name of the Attorney*] in the scope of Power of Attorney.
This Power of Attorney is valid for the period from_____to_____[3] and will be made in ____ originals, _____ of which will be retained by Mandator; _____of which will be retained by Attorney and the rest will be retained by Vietsovpetro. All original copies hereof are identical and legally equal.

Attorney	Mandator
(*Signature*)	(*Signature*)
(Name, position and stamp (if any))	*(Name, position and stamp (if any) of Legitimate representative of the bidder)*

Note:

[1].The original of this Power of Attorney must be submitted to Vietsovpetro together with the application for bidding as stipulated in ITB 20.3. Legitimate representative of bidder gives the power of attorney to the deputy, subordinate, branch's manager, chief of bidder's representative office to perform one or more above mentioned listed acts. The stamp used in case of power of attorney can belong to the bidder or to the entity of Attorney. The Attorney can not subsequently give this authorization to another.

[2].The scope of Power of Attorney may include one or more above mentioned listed acts.

[3].Specify the date the power of attorney come into force and expiry date, in accordance with the bidding process.

Văn bản này được xác thực tại https://eoffice.vietsov.com.vn với số định danh: 13443/25-HSMT-PTM/BMĐH

FORM 03

CONSORTIUM AGREEMENT [1]

_____, day ___month ___year _____

Bidding package: _____ [*name of bidding package*]

Under the project: _____ [*name of project*]

- Based on the Invitation to Bid _____[*name of bidding package*] date ___ month ___ year _____ [*date recorded on the Invitation to Bid*];

We, the representatives of the parties sign the Consortium Agreement, including:

Names of Consortium members _____ [*name of each consortium member*]

Represented by Mr./Ms.: _____

Position: _____

Address: _____

Tel: _____

Fax: _____

E-mail: _____

Account: _____

Tax code: _____

Power of Attorney No.____ date___ month ___ year _____(*in case of authorization*).

The parties (hereinafter referred to as members) agreed to sign this Consortium Agreement with the following contents:

Article 1. General principles

1. The members voluntarily establish a Consortium to participate in the bidding package _____ [*name of bidding package*] under the project _____ [*name the project*].

2. The members agree the name of the Consortium for any transactions related to this package as: _____ [*name of the Consortium as Agreement*].

3. The members commit that there is not any member to arbitrarily join independently in this bidding package or join consortium with other members to participate in this bidding package. In case of winning the bid, all members of the Consortium shall sign the Contract and there is not any member to have the right to refuse performance of the responsibilities and obligations stipulated in the Agreement. In case a member of the Consortium refuses to fulfill their own responsibilities as agreed or violates the provisions of the signed contract, such member shall be handled as follows:

- Compensating for damages to the parties in the consortium;
- Working with members of the Consortium to compensate for all damages to the Vietsovpetro in accordance with the provisions stipulated in the Contract (corresponding to the proportion of each member specified in Article 2 of this Agreement);
- Other forms of handling ____ *[Specify other forms of handling]*.

Article 2. Assignment of responsibilities

Consortium members agree to assign responsibilities for implementation of the bidding package _____ [*write name of bidding package*] under the project _____ [*write name of project*], for each member as follows:

1. Leader of the consortium:

Văn bản này được xác thực tại https://eoffice.vietsov.com.vn với số định danh: 13443/25-HSMT-PTM/BMĐH

The parties agree to authorize to _____ [*Write name of a party*] as a leader of the consortium, representing the Consortium in the following part of work [2:]

- Signing the application of bidding;

- Signing all documents, correspondences to Vietsovpetro during the bidding process, including the written requests to clarify Invitation to Bid, written clarification of Bid proposal, or written requests to withdraw, modify or substitute the bid proposal;

- Performing Bid Bond on behalf of Consortium;

- Participating in the process of negotiation and finalization of the Contract;
- Performing Performance Bond for the entire Consortium in case the Consortium wins the bid;

- Signing the Bidder's arising claims (if any);
- Performing all obligations of the Consortium which are not specified in the Table of Responsibility between the Consortium members in item 2 as follows;

- Performing other works except for signing Contract _____ [specify the detail content of other jobs (if any)].

2. The members of the Consortium agree to assign the responsibility of members as following table [3]:

No.	**Name**	**Content of assigned work**	**Respective percentage to total bidding price**	**Amount by percentage to total bidding price**
(1)	*(2)*	*(3)*	*(4)*	*(5)*
1	Name of the first member (Leader of the Consortium)	- Work 1:_____ - Work 2:_____ - Work 3:_____ ……..	_____%	____ *VND/USD*
2	Name of the second member	- Work 1:_____ - Work 2:_____ - Work 3 _____	_____%	____ *VND/USD*
....	.....	....		
Total		**All work of bidding package**	**100%**	____ *VND/USD*

3. The payment method for the Consortium in case of winning the bid and signing a contract with the Investor ... is as follows:

- The Investor shall make direct payment to each member of the Consortium in accordance with the payment schedule specified in the Contract with the distributed amount corresponding to the proportion of workload agreed by the Consortium members and shown in column (4) of the Table of Responsibility in item 2 of this Consortium Agreement.

- Each member of the Consortium shall issue a Legal Invoice in accordance with the amount of the work performed by such Consortium member pursuant to the progress of each payment specified in the Contract.

Article 3. Validity of Consortium Agreement

1. This Consortium Agreement valid from its signing date.

2. This Consortium Agreement shall be determined to be invalid in the following cases:

- In case the Consortium wins the bid, this Consortium Agreement is an integral part of the contract signed with the Investor …and shall only be terminated when the parties fulfill their responsibilities and obligations and complete the liquidation of the contract;

- The parties agree to terminate;

Văn bản này được xác thực tại https://eoffice.vietsov.com.vn với số định danh: 13443/25-HSMT-PTM/BMĐH

- The Consortium does not win the bid;

- Cancellation of bidding package under the project as notified by the Vietsovpetro.

Consortium Agreement is made in ____ copies, each party keeps ____ copy, each having equal legal force and authenticity.

LEGAL REPRESENTATIVE OF CONSORTIUM LEADER
[Full name, title, signature and stamp]

LEGAL REPRESENTATIVE OF CONSORTIUM MEMBERS
[Full name of each member, title, signature and stamp]

Note:

[1] Depending on the size and nature of bidding package, the content of agreement as in this form can be amended appropriately. If the bidding package is divided into multiple independent parts, the consortium agreement must specify clearly the name, reference number of parts that the consortium participates, specify mutual responsibility and separate responsibility of each member in accordance with respective parts that bidder participates.
[2] The scope of authorization may include one or more above mentioned listed acts

[3] Bidder must specify the detail work and the estimated percentage of respective value that each member will implement, mutual responsibility and separate responsibility of each member, including head member of the Consortium.

Văn bản này được xác thực tại https://eoffice.vietsov.com.vn với số định danh: 13443/25-HSMT-PTM/BMĐH

FORM 04A

GUARANTEE FOR BID PARTICIPATION [1]

(applied for independent bidder)

Bảo lãnh dự thầu

Bên thụ hưởng: ____ *[ghi tên và địa chỉ của Bên mời thầu]*

Ngày phát hành bảo lãnh: ___ *[ghi ngày phát hành bảo lãnh]*

BẢO LÃNH DỰ THẦU SỐ: ___ *[ghi số trích yếu của Bảo lãnh dự thầu]*

Bên bảo lãnh: _____ *[ghi tên và địa chỉ nơi phát hành, nếu những thông tin này chưa được thể hiện ở phần tiêu đề trên giấy in]*

Chúng tôi được thông báo rằng ____ *[ghi tên nhà thầu]* (sau đây gọi là "Bên yêu cầu bảo lãnh") sẽ tham dự thầu để thực hiện gói thầu ____ *[ghi tên gói thầu]* thuộc dự án ____ *[ghi tên dự án]* theo Thư mời thầu/thông báo mời thầu số ____ *[ghi số trích yếu của Thư mời thầu/thông báo mời thầu]*.

Chúng tôi cam kết với Bên thụ hưởng rằng chúng tôi bảo lãnh cho nhà thầu tham dự thầu gói thầu này bằng một khoản tiền là ____ *[ghi rõ giá trị bằng số, bằng chữ và đồng tiền sử dụng]*.

Bảo lãnh này có hiệu lực trong ____[2] ngày, kể từ ngày __ tháng __ năm ___[3].

Theo yêu cầu của Bên yêu cầu bảo lãnh, chúng tôi, với tư cách là Bên bảo lãnh, cam kết không hủy ngang và vô điều kiện thanh toán cho Bên thụ hưởng một khoản tiền hay các khoản tiền không vượt quá tổng số tiền là ____ *[ghi bằng chữ] [ghi bằng số]* trong vòng 05 ngày làm việc kể từ ngày nhận được văn bản thông báo nhà thầu vi phạm từ Bên thụ hưởng trong đó nêu rõ mà không cần chứng minh:

1. Nhà thầu rút hồ sơ dự thầu sau thời điểm đóng thầu và trong thời gian có hiệu lực của hồ sơ dự thầu;
2. Nhà thầu vi phạm pháp luật về đấu thầu dẫn đến phải hủy thầu theo quy định tại Mục 32 – Chỉ dẫn đối với nhà thầu;
3. Nhà thầu không tiến hành hoặc từ chối tiến hành thương thảo hợp đồng trong thời hạn 5 ngày làm việc, kể từ ngày nhận được thông báo mời đến thương thảo hợp đồng của Bên mời thầu; hoặc Nhà thầu tiến hành thương thảo hợp đồng nhưng rút lại các cam kết trong HSDT dẫn đến việc thương thảo hợp đồng không thành công, trừ trường hợp bất khả kháng;
4. Nhà thầu không tiến hành hoặc từ chối tiến hành hoàn thiện hợp đồng trong thời hạn 20 ngày, kể từ ngày nhận được thông báo trúng thầu của Bên mời thầu hoặc đã hoàn thiện hợp đồng nhưng từ chối ký hợp đồng, trừ trường hợp bất khả kháng;
5. Nhà thầu không thực hiện biện pháp bảo đảm thực hiện hợp đồng theo quy định tại Mục 37.1 - Chỉ dẫn đối với nhà thầu.

Số tiền bảo lãnh nêu trên sẽ được thanh toán ngay bởi Bên bảo lãnh cho Bên thụ hưởng cho dù có sự tranh cãi hoặc phản đối nào của Bên yêu cầu bảo lãnh hoặc của Bên bảo lãnh hoặc của bất kì bên thứ ba nào khác, và bất kể có hay không sự tranh chấp giữa Bên yêu cầu bảo lãnh và Bên thụ hưởng về hoặc liên quan tới Gói thầu hoặc về bất cứ vấn đề khác và cho dù những tranh chấp này, nếu có, đã được giải quyết, dàn xếp, kiện tụng hoặc phân xử bằng bất kỳ hình thức nào.

Nếu Bên yêu cầu bảo lãnh được lựa chọn: bảo lãnh này sẽ hết hiệu lực ngay sau khi Bên yêu cầu bảo lãnh ký kết hợp đồng và nộp Bảo lãnh thực hiện hợp đồng cho Bên thụ hưởng theo thỏa thuận trong hợp đồng đó.

Nếu Bên yêu cầu bảo lãnh không được lựa chọn: bảo lãnh này sẽ hết hiệu lực ngay sau khi chúng tôi nhận được bản chụp văn bản thông báo kết quả lựa chọn nhà thầu từ Bên thụ hưởng gửi cho Bên yêu cầu bảo lãnh; trong vòng 30 ngày sau khi hết thời hạn hiệu lực của hồ sơ dự thầu.

Bất cứ yêu cầu bồi thường nào theo bảo lãnh này đều phải được gửi đến văn phòng chúng tôi trước hoặc trong ngày đó.

Đại diện hợp pháp của ngân hàng

[ghi tên, chức danh, ký tên và đóng dấu]

Văn bản này được xác thực tại https://eoffice.vietsov.com.vn với số định danh: 13443/25-HSMT-PTM/BMĐH

BID BOND

Beneficiary: JOINT VENTURE VIETSOVPETRO
105 LE LOI STR, VUNGTAU CITY, S.R. VIETNAM.
(Hereinafter referred to as the Beneficiary)

Date:_____ *[Insert date of issue]*
BID GUARANTEE No.:_____ *[Insert guarantee reference number]*
Guarantor: _____ *[Insert name and address of place of issue, unless indicated in the letterhead]*

We have been informed that ……*[insert name of the Bidder.]* (hereinafter called "the Applicant") will participate bid for execution of the bidding package____ *[name of the bidding package]* under project____ *[name of the project]* according to Bid Invitation letter No/Bid Announcement No.____. *[insert No. of Bid Invitation letter/ Bid Announcement No]*.

We [*name of the bank],* hereinafter referred to as "the bank", pledge Beneficiary to guarantee for the bidder to participate in bidding for this bidding package with an amount of [*specify the value in number, in words, and the currency in use]*.

This guarantee is effective for ……[2] days, from the date……month…..year [3]

At the request of the Applicant, we, as Guarantor, hereby unconditionally and irrevocably undertake to pay the Beneficiary any sum or sums not exceeding in total an amount of *[insert amount in figures, insert amount in words]* within 05 working days upon our receipt of written notice from Beneficiary stating without requiring proof that bidder violates the regulations as follows:

1. Bidder has withdrawn its Bid proposal after Deadline for Bid submission and during the validity period of bid proposal;
2. Bidder violating Law on Bidding leads to cancellation of Bid in accordance with ITB 32;
3. Bidder fails or refuses to conduct contract negotiations within 05 working days from the date receipt of notification for negotiation of contracts by Vietsovpetro; or Bidder conducts contract negotiations but withdraws its Bid proposal leading to failed contract negotiations, except for force majeure;
4. Bidder fails or refuses to conduct contract finalization within 20 working days from the receipt date of Bid Award Notification from Vietsovpetro or bidder finalized contract but refuses to sign contract, except for force majeure;
5. Bidder does not conduct performance bond in accordance with ITB 37.1;

The said guarantee amount shall be paid by Guarantor forthwith to Beneficiary notwithstanding any contestation or protest by Guarantor or Applicant or by any third party, and irrespective of whether or not there is any dispute between Applicant and Beneficiary in respect of or relating to the Bidding package or in respect of any other matter and irrespective of whether or not such said dispute, if any, has been settled, resolved, litigated, or adjudicated upon otherwise howsoever.

If Applicant is selected as successful bidder: This guarantee will expire immediately if the Applicant signs contract and submit Performance Bond to Beneficiary in accordance with agreement in contract.

If Applicant is not selected as successful bidder: This Guarantee will expire immediately after we receive a copy of the Beneficiary's notification to the Applicant about the result of the Bidder selection; within 30 days after the validity period of bid proposal.

Any demand for payment under this guarantee must be received by us at the office indicated above on or before that date.

Legitimate representative of the bank
(Specify name, title, sign and stamp)

Note:
[1] Apply if Bid Guarantee is in form of Letter of Guarantee from financial institution or foreign bank's branches which is legally operating in Vietnam
[2] Insert as stipulated in BDS 18.2
[3] Insert Deadline for bid submission as stipulated in BDS 19.1

Văn bản này được xác thực tại https://eoffice.vietsov.com.vn với số định danh: 13443/25-HSMT-PTM/BMĐH

Form No. 04B

GUARANTEE FOR BID PARTICIPATION [1]
(applied for consortium bidders)
BẢO LÃNH DỰ THẦU

Bên thụ hưởng: ____ *[ghi tên và địa chỉ của Bên mời thầu]*
Ngày phát hành bảo lãnh: ____ *[ghi ngày phát hành bảo lãnh]*
BẢO LÃNH DỰ THẦU số: _____ *[ghi số trích yếu của Bảo lãnh dự thầu]*
Bên bảo lãnh: ____ *[ghi tên và địa chỉ nơi phát hành, nếu những thông tin này chưa được thể hiện ở phần tiêu đề trên giấy in]*

Chúng tôi được thông báo rằng ___ [*ghi tên nhà thầu]* (sau đây gọi là "Bên yêu cầu bảo lãnh") sẽ tham dự thầu để thực hiện gói thầu ____ [*ghi tên gói thầu]* thuộc dự án _____ *[ghi tên dự án*] theo Thư mời thầu/thông báo mời thầu số _____ *[ghi số trích yếu Thư mời thầu/thông báo mời thầu]*.

Chúng tôi cam kết với Bên thụ hưởng rằng chúng tôi bảo lãnh cho nhà thầu tham dự thầu gói thầu này bằng một khoản tiền là ____ [ghi rõ giá trị bằng số, bằng chữ và đồng tiền sử dụng].

Bảo lãnh này có hiệu lực trong _____ ngày, kể từ ngày ___ tháng ___ năm ____
Theo yêu cầu của Bên yêu cầu bảo lãnh, chúng tôi, với tư cách là Bên bảo lãnh, cam kết không hủy ngang và vô điều kiện thanh toán cho Bên thụ hưởng một khoản tiền hay các khoản tiền không vượt quá tổng số tiền là ____ *[ghi bằng số và chữ]* trong vòng 05 ngày làm việc kể từ ngày nhận được văn bản thông báo nhà thầu vi phạm từ Bên thụ hưởng trong đó nêu rõ mà không cần chứng minh:

1. Nhà thầu rút hồ sơ dự thầu sau thời điểm đóng thầu và trong thời gian có hiệu lực của hồ sơ dự thầu;
2. Nhà thầu vi phạm pháp luật về đấu thầu dẫn đến phải hủy thầu theo quy định tại Mục 32 – Chỉ dẫn đối với nhà thầu;
3. Nhà thầu không tiến hành hoặc từ chối tiến hành thương thảo hợp đồng trong thời hạn 5 ngày làm việc, kể từ ngày nhận được thông báo mời đến thương thảo hợp đồng của Bên mời thầu; hoặc Nhà thầu tiến hành thương thảo hợp đồng nhưng rút lại các cam kết trong HSDT dẫn đến việc thương thảo hợp đồng không thành công, trừ trường hợp bất khả kháng;
4. Nhà thầu không tiến hành hoặc từ chối tiến hành hoàn thiện hợp đồng trong thời hạn 20 ngày, kể từ ngày nhận được thông báo trúng thầu của Bên mời thầu hoặc đã hoàn thiện hợp đồng nhưng từ chối ký hợp đồng, trừ trường hợp bất khả kháng;
5. Nhà thầu không thực hiện biện pháp bảo đảm thực hiện hợp đồng theo quy định tại Mục 37.1 - Chỉ dẫn đối với nhà thầu.

Nếu bất kỳ thành viên nào trong liên danh ___ *[ghi đầy đủ tên của nhà thầu liên danh]* vi phạm quy định của pháp luật dẫn đến không được hoàn trả bảo đảm dự thầu theo quy định tại Mục 19.5 - Chỉ dẫn nhà thầu của hồ sơ mời thầu thì bảo đảm dự thầu của tất cả thành viên trong liên danh sẽ không được hoàn trả.
Số tiền bảo lãnh nêu trên sẽ được thanh toán ngay bởi Bên bảo lãnh cho Bên thụ hưởng cho dù có sự tranh cãi hoặc phản đối nào của Bên yêu cầu bảo lãnh hoặc của Bên bảo lãnh hoặc của bất kì bên thứ ba nào khác, và bất kể có hay không sự tranh chấp giữa Bên yêu cầu bảo lãnh và Bên thụ hưởng về hoặc liên quan tới Gói thầu hoặc về bất cứ vấn đề khác và cho dù những tranh chấp này, nếu có, đã được giải quyết, dàn xếp, kiện tụng hoặc phân xử bằng bất kỳ hình thức nào.
Nếu Bên yêu cầu bảo lãnh được lựa chọn: bảo lãnh này sẽ hết hiệu lực ngay sau khi Bên yêu cầu bảo lãnh ký kết hợp đồng và nộp Bảo lãnh thực hiện hợp đồng cho Bên thụ hưởng theo thỏa thuận trong hợp đồng đó.
Nếu Bên yêu cầu bảo lãnh không được lựa chọn: bảo lãnh này sẽ hết hiệu lực ngay sau khi chúng tôi nhận được bản chụp văn bản thông báo kết quả lựa chọn nhà thầu từ Bên thụ hưởng gửi cho Bên yêu cầu bảo lãnh; trong vòng 30 ngày sau khi hết thời hạn hiệu lực của hồ sơ dự thầu.
Bất cứ yêu cầu bồi thường nào theo bảo lãnh này đều phải được đến tới văn phòng chúng tôi trước hoặc trong ngày đó.

Đại diện hợp pháp của ngân hàng
[ghi tên, chức danh, ký tên và đóng dấu]

Văn bản này được xác thực tại https://eoffice.vietsov.com.vn với số định danh: 13443/25-HSMT-PTM/BMĐH

BID BOND

Beneficiary: JOINT VENTURE VIETSOVPETRO
105 LE LOI STR, VUNGTAU CITY, S.R. VIETNAM.
(Hereinafter referred to as the Beneficiary)

Date:_____*[Insert date of issue]*

BID GUARANTEE No.:_____ *[Insert guarantee reference number]*

Guarantor:_____*[Insert name and address of place of issue, unless indicated in the letterhead]*

We have been informed that ……*[insert name of the Bidder.]*[2] (hereinafter called "the Applicant") will participate bid for execution of the bidding package_ *[name of the bidding package]* under project *[name of the project]* according to Bid Invitation letter No. *[name No. of Bid Invitation letter]*.

We [*name of the bank],* hereinafter referred to as "the bank", pledge Beneficiary to guarantee for the bidder to participate in bidding for this bidding package with an amount of [*specify the value in number, in words, and the currency in use]*.

This guarantee is effective for ……[3].days, from the date……month… year [4]
At the request of the Applicant, we as Guarantor, hereby unconditionally and irrevocably undertake to pay the Beneficiary any sum or sums not exceeding in total an amount of_ *[insert amount in figures, insert amount in words]* within 05 working days upon our receipt of written notice from Beneficiary stating without requiring proof that bidder violates the regulations as follows:

1. Bidder has withdrawn its Bid proposal after Deadline for Bid submission and during the validity period of bid proposal;
2. Bidder violating Law on Bidding leads to cancellation of Bid in accordance with ITB 32;
3. Bidder fails or refuses to conduct contract negotiations within 05 working days from the date receipt of notification for negotiation of contracts by Vietsovpetro; or Bidder conducts contract negotiations but withdraws its Bid proposal leading to failed contract negotiations, except for force majeure;
4. Bidder fails or refuses to conduct contract finalization within 20 working days from the receipt date of Bid Award Notification from Vietsovpetro or bidder finalized contract but refuses to sign contract, except for force majeure;
5. Bidder does not conduct performance bond in accordance with ITB 37.1;

If any member of consortium___*[insert name of consortium]* violates the Law, that leads to the Bid Bond not to be returned as specified in Point 15.4 - Instructions to Bidders of Invitation for Bids, then the Bid Bond of all consortium members shall not be returned.

The said guarantee amount shall be paid by Guarantor forthwith to Beneficiary notwithstanding any contestation or protest by Guarantor or Applicant or by any third party, and irrespective of whether or not there is any dispute between Applicant and Beneficiary in respect of or relating to the Bidding package or in respect of any other matter and irrespective of whether or not such said dispute, if any, has been settled, resolved, litigated, or adjudicated upon otherwise howsoever.

This guarantee will expire: (a) if the Applicant is the successful Bidder, upon our receipt of copies of the contract agreement signed by the Applicant and the performance security issued to the Beneficiary upon the instruction of the Applicant; or (b) if the Applicant is not the successful Bidder, upon the earlier of our receipt of a copy of the Beneficiary's notification to the Applicant of the name of the successful bidder within 30 days after the expiration of Bid Proposal.

Any demand for payment under this Bid Bond must be received by us at the office on or before that date.

Legal representative of Bank

[name, position, signature and stamp]

Văn bản này được xác thực tại https://eoffice.vietsov.com.vn với số định danh: 13443/25-HSMT-PTM/BMĐH

Note:

[1] Applying in case the bid security (bank security) is a letter of guarantee of credit institutions or foreign banks' branches which are established under Vietnamese law. The bank is recommended to use this Bid security (bid bond) form, in case of applying for other different forms that violates one of following regulations: bid security has lower value than required, the validity period of bid security is shorter than regulation prescribed in ITB 18.2, invalid name of Beneficiary, not original and without valid signature or with the disadvantageous conditions to Vietsovpetro, bid security shall be invalid.

[2] Bidders' name can be one of following cases:

- Name of consortium participates in bid, for instance consortium bidder A + B participates in bid, name of bidders shall be written "Consortium bidder A + B";
- Name of the member undertakes implementation of bid security for the entire consortium or for other partners in consortium, for instance consortium A + B + C participates in bid, case of the consortium agreement appointed bidder A performing bid security for whole consortium, the name of bidder shall be "Bidder A (on behalf of consortium bidder A + B + C), in case the consortium agreement appointed bidder B performing bid security for bidder B and C, then name of bidder shall be written as "Bidder B (for the behalf of bidder B and C)";
- Name of consortium's member perform separate the bid security;

[3] Insert as prescribed in point 18.2 Bidding Data Sheet (BDS).

[4] Insert date deadline for bid submission in accordance with BDS 19.1

Văn bản này được xác thực tại https://eoffice.vietsov.com.vn với số định danh: 13443/25-HSMT-PTM/BMĐH

FORM 04C

FORM OF DEPOSIT FOR BID PARTICIPATION

Date: ……. (*Date of signing application for bidding*)
Name of bidding package:…….. (*Name Package according to Bid Announcement*)
Name of project: …… (*Name project*)
Bid invitation No. :……(*In case of limited tendering*)
Attention to: _____ (*full name and address of employer*)

With reference to the above mentioned bidding package, we *[insert the name of the bidder*] hereby would like to confirm as follows:

1. In lieu of the submission of Bid Bond issued by a bank, *[insert the name of the bidder*] shall implement bid guarantee for [*name of bidding package*] in the form of transfer to Vietsovpetro's bank account a deposit amount equivalent to the Bid Bond amount specified in the ITB, i.e [*specify in number, in words, and currency of deposit*]
2. Bidder confirm that Bidder shall comply all conditions as stipulated in Bid bond form of ITB. (*In the event that Bidder confirms not to comply all conditions in the Bid bond's form in ITB, Bidder's bidding proposal shall not be evaluated)*
3. After [*insert the required bid bond validity period*] days from the bid closing date ……., Vietsovpetro shall transfer deposit amount above to *[insert the name of the bidder*]'s account. *[insert the name of the bidder*] shall be responsible for all the bank fees in connection with this transfer.
4. Vietsovpetro's bank account:

   Beneficiary's name: Vietsovpetro

   Beneficiary's Bank: Joint Stock Commercial Bank for Foreign Trade of Vietnam – Vungtau Branch

   Account Number: 008.100.00000.11 (VND)

Legitimate representative of the bidder
[name, position, signature and stamp]

Notes:

Along with this letter, bidder must enclose the Payment order or appropriate document evidencing that bidder executed the payment to Vietsovpetro account.

Văn bản này được xác thực tại https://eoffice.vietsov.com.vn với số định danh: 13443/25-HSMT-PTM/BMĐH

FORM 05

BIDDER'S INFORMATION FORM

Date: _____
NCB No. and title:_____

Bidder's name:____*[specify Bidder's name]*
In case of consortium, insert name of each partner in consortium
Place of business registration:_____ *(indicate province/city of Constitution)*
Year of business founding / incorporation __ *[year of company founding]*
Bidder's legal address *(in country of registration)*
Bidder's legitimate representative information:
Name:
Address:
Telephone/fax numbers:
E-mail address:

a. Attached are copies of original documents: Articles of Incorporation, Business Registration, Decision of Establishment or equivalent documents of constitution or association issued by authority of country where Bidder is operating.
b. Included the organizational chart.

Legitimate representative of the bidder
[name, position, signature and stamp]

Note:
(1) In case of consortium Bidder, each consortium member must declare this form.

Văn bản này được xác thực tại https://eoffice.vietsov.com.vn với số định danh: 13443/25-HSMT-PTM/BMĐH

FORM 06

INFORMATION FORM FOR CONSORTIUM BIDDER's MEMBERS

Date:_____
Bid package No. and titles:____

Consortium Bidder's name:
Consortium member's name:
Consortium member's country of registration:
Consortium member's year of foundation:
Consortium member's legal address in country of registration:
Consortium member's legitimate representative information:
Name:
Address:
Telephone/fax numbers:
E-mail address:

1. Attached are copies of original documents of: Business Registration of Company, Certificate of Investment, Decision of Establishment, etc.
2. Included is the organizational chart.

Legitimate representative of the bidder
[name, position, signature and stamp]

Note:
(1) In case of consortium Bidder, each consortium member must declare this form.

Văn bản này được xác thực tại https://eoffice.vietsov.com.vn với số định danh: 13443/25-HSMT-PTM/BMĐH

FORM 07A

SIMILAR CONTRACT PERFORMED BY BIDDER[1]

(applicable to commercial bidders)

Date __ month __ year __

Bidder's name: ____ *[full name of bidder]*
Descriptions of each contract should contain following information:

Name and contract number	*[Full contract name and number]*		
Contract signing date	*[Date, month, year]*		
Completion date	*[Date, month, year]*		
Contract Value(3)	*[Total signed contract value and the original currency]*		Equivalent to ____ VND
If the bidder is a consortium member, provide a summary of the work undertaken and its value	*[Summary of the work]*	*[Value of the work undertaken (amount in original currency and %]*	Equivalent to ___ VND
Project or Procurement name	*[Full name of the project/procurement estimate whose contract is being declared]*		
Name of Investor:	*[Full name of the Investor in the contract being declared]*		
Address: Telephone/fax: Email:	*[Full current address of the Investor]* *[Phone number, fax number including country code, area code]* *[Email address]*		
Describe similarities in accordance with Section 2.1 of Chapter III(2)			
1. Type of goods	*[Correct type]*		
2. Fulfilled contract value (3)	*[Actual contract value fulfilled based on acceptance value, contract liquidation]*		
3. Scale	*[Scale according to the contract]*		
4. Other characteristics	*[Other characteristics, if needed]*		

Legitimate representative of the bidder
[name, position, signature and stamp]

Note:
The contractor shall carefully study the Invitation to Bid and proposes similar contracts to ensure the requirements of the Invitation to Bid are complied.

1. In case of consortium, each member must declare according to this Form.
2. Bidders only declare the similar content with the requirements of the bidding package.
3. In case the contract value is not in VND, it shall be converted to VND at the exchange rate specified in Section 2 of Chapter III as a basis for evaluation.

Văn bản này được xác thực tại https://eoffice.vietsov.com.vn với số định danh: 13443/25-HSMT-PTM/BMĐH

FORM 07B

DECLARATION OF GOODS PRODUCTION CAPACITY
*(applicable to bidders who are manufacturers – **NOT APPLICABLE**)*

Văn bản này được xác thực tại https://eoffice.vietsov.com.vn với số định danh: 13443/25-HSMT-PTM/BMĐH

FORM 08A
(Not applicable)

PROPOSED KEY PERSONEL

The Bidder shall declare its key personnel as required in Section 2 of Chapter III and shall demonstrate its capability to mobilize these people to deliver the bidding package. Key personnel may be on the contractor's payroll or mobilized by the bidder. In case the key personnel declared by the bidder in its bid proposal does not meet the requirements or the contractor cannot demonstrate mobilization capability (including cases where said personnel has been mobilized for another contract with overlapping execution timeline), Vietsovpetro shall allow the bider to make addition or replacement. The bidder is allowed to make addition or replacement once for each position for a suitable period of time not less than 03 working days. In case the bidder does not have a replacement comlying the Invitation to Bid's requiments, the contractor shall be disqualified. In all cases, if the bidder declares personnel in a dishonest manner, making replacement shall not be allowed, the bid proposal shall be disqualified and the bidder shall be considered fraudulent according to the provisions of legislation on bidding or other relevant legislation and penalized accordingly.

1	Job position *[detailed job position in the bidding package]*
	Name *[name of key personnel]*
2	Job position *[detailed job position in the bidding package]*
	Name *[name of key personnel]*
3	Job position
	Name
4	Job position
	Name
5	Job position
	Name
—	Job position
	Name

Legitimate representative of the bidder
[name, position, signature and stamp]

Văn bản này được xác thực tại https://eoffice.vietsov.com.vn với số định danh: 13443/25-HSMT-PTM/BMĐH

FORM 08B
(Not applicable)

PROFESSIONAL CURRICULUM VITAE OF KEY PERSONNEL

The Bidder must supply all required information below and attach certified copies of original related documents.

Position		
Personnel Information	Name	Date of Birth
	Professional Qualification	
Current Job	Employer's name	
	Employer's address	
	Telephone no:	Contact person (Deputy / HR officer)
	Fax	E-mail
	Title	Number of years of experience with the present employer

Legitimate representative of the bidder
[name, position, signature and stamp]

Văn bản này được xác thực tại https://eoffice.vietsov.com.vn với số định danh: 13443/25-HSMT-PTM/BMĐH

FORM 08C
(Not applicable)

PROFESSIONAL EXPERIENCE

Summarize professional experience in reverse chronological order. Specify professional and management experience related to the bidding package

from	To	Company/Project/Position/Related professional and management experience

Legitimate representative of the bidder
[name, position, signature and stamp]

Văn bản này được xác thực tại https://eoffice.vietsov.com.vn với số định danh: 13443/25-HSMT-PTM/BMĐH

FORM 09

HISTORICAL CONTRACT NON-PERFORMANCE FOR THE SUPPLY OF GOODS NOT FULFILLED DUE TO FAULT OF THE CONTRACTOR IN THE PAST (1)

Name of contractor: _____

Date: _____

Name of member of the consortium contractor (if any):_____

Contracts for the supply of goods not fulfilled due to fault of the contractor in the past in accordance with Clause 2.1 Section 2 Chapter III			
☐ No contract Supply of goods not fulfilled through bidder's fault as of January 1, *[...]* in accordance with Criterion 1 in the Evaluation Standards for Competence and Experience under Clause 2.1, Section 2, Chapter III. ☐ There is a contract Supply of goods not fulfilled through bidder's fault as of January 1, *[...]* in accordance with the Evaluation Standards for Competence and Experience under Clause 2.1 Section 2 of Chapter III.			
Year	**Scope of work not fulfilled**	**Contract description**	**Total contract value** (value, currency, exchange rate, equivalent value in VND)
		Contract Description: _____ Name of Investor: _____ Address:_____ Causes of non-fulfillment of the contract: _____	

Legitimate representative of the bidder
[name, position, signature and stamp]

Notes:

(1) The Bidder must accurately and truthfully declare contracts for the supply of goods that were not fulfilled through fault of the Bidder in the past. In case Vietsovpetro discovers that the bidder has a contract for the supply of goods that is not fulfilled due to fault of the bidder in the past which was not declared, the bidder is deemed to have committed fraud and its bid proposal shall be disqualified. For a consortium bidder, each member of the consortium must declare using this form.

Văn bản này được xác thực tại https://eoffice.vietsov.com.vn với số định danh: 13443/25-HSMT-PTM/BMĐH

FORM 10

BIDDER'S HISTORICAL FINANCIAL PERFORMANCE[1]

Bidder's name:_____
Date:_____
Name of Consortium member (if any):_____

	Financial Data for Previous **05** Years[2] [VND/USD]		
	Year 1	**Year 2**	**Year 3**
Information from balance sheet			
Total assets			
Total liabilities			
Net worth			
Current assets			
Current liabilities			
Working capital			
Information from Income Statement			
Total turnover			
Average annual turnover from business activities[3]			
Profits before taxes			
Profits after taxes			

Attached are copies of financial statements (balance sheets, including all related notes and income statements) for the last **03** years[4], as indicated above, complying with the following conditions:

- All such documents reflect the financial situation of the legal entity or entities comprising the Bidder and not the Bidder's parent companies, subsidiaries or affiliates.
- Historic financial statements must be audited in accordance with the applicable laws and regulations.
- Historic financial statements must be complete, including all notes to the financial statements.
- Historic financial statements must correspond to accounting periods already completed and audited. Attached with notarized copies one of following original documents:

- Tax finalization inspection report.
- Declaration form of self tax finalization report (VAT and CIT) confirmed by the Tax department/ District tax department at the time of submitting the declaration form.
- Proper documentation in which the bidder has declared the electronic tax finalization.
- Confirmation in writing from tax department/ district tax department (confirmed the cumulative payment for full year) about complying paying tax duty.
- Audited report
- Other documents

Legitimate representative of the bidder
[name, position, signature and stamp]

Note:

(1) In case of Consortium Bidder then each member of Consortium Bidder must declare according to this Form.

(2), (4) The period stated here should be the same as the period indicated under Criterion 2.1of Chapter III (Bid Evaluation Criteria).

(3) To determine average annual turnover from business activities, the Bidder will divide total turnover from business activities in years to number of years based on supplied information.

Văn bản này được xác thực tại https://eoffice.vietsov.com.vn với số định danh: 13443/25-HSMT-PTM/BMĐH

FORM 11A
(Not applicable)

SCOPE OF WORK USING SUB-CONTRACTORS[1]

No.	Name of sub-contractor[2]	Scope of work[3]	Amount of work[4]	Value estiamated[5]	Contract or agreement document with sub-contractor[6]
1					
2					
3					
4					
...					

Legitimate representative of the bidder
[name, position, signature and stamp]

Note:
[1] Applying this form in case of using sub-contractors.
[2] Bidder specifies the sub-contractor's names. In case at the moment at participating in bid, the sub-contractors have not yet been identified, bidders do not have to provide information in this column, but it should be declared in the column "Scope of work". After that, if bidder is being successful, since the sub-contractors mobilized for implementing the work have to be approved by the Vietsovpetro.
[3] Bidder specifies name and work description for the sub-contractor.
[4] Bidder specifies the scope of work for the sub-contractor.
[5] Bidder specifies the value of work percentage which the sub-contractor undertakes compared to the bidding price.
[6] Bidder specifies the contracts number or agreement documents, the bidder should submit the original or notarized copy of these documents.

Văn bản này được xác thực tại https://eoffice.vietsov.com.vn với số định danh: 13443/25-HSMT-PTM/BMĐH

FORM 11B
(Not applicable)

LIST OF SPECIALIZED SUB-CONTRACTORS[1]

Bidder must provide the proof evidence which meets requirements prescribed at Point 2.3 Chapter III, Bid Proposal Evaluation criteria.

STT No	Name of specialized subcontractor[2]	Scope of work[3]	Amount of work[4]	Percentage value estimated[5]	Contract or agreement document with specialized sub-contractor[6]
1					
2					
3					
4					
...					

Legitimate representative of the bidder
[name, position, signature and stamp]

Note:

[1] Applying this form in case of using sub-contractor.
[2] Bidder specifies the specialized sub-contractor's name.
[3] Vietsovpetro specifies names and work description that are implemented by the specialized sub-contractor.
[4] Bidder specifies the scope of work assigned to the specialized sub-contractor.
[5] Bidder specifies the value of work in percentage which the specialized sub-contractor undertakes to perform, compared to the bidding price.
[6] Bidder specifies the contract numbers or agreement documents, the bidder should submit the original or notarized copy of these documents.

Văn bản này được xác thực tại https://eoffice.vietsov.com.vn với số định danh: 13443/25-HSMT-PTM/BMĐH

Form 11C

LIST OF SUBSIDIARIES AND MEMBER COMPANIES DELIVERING WORK IN THE BID PACKAGE [(1)]

No.	Name of subsidiary/ member company[(2)]	Scope of work[(3)]	Value (% out of bid value)[(4)]	Notes
1				
2				
...				

Legitimate representative of the bidder
[name, position, signature and stamp]

Notes:

(1) In the case the contractor participating in bidding, being a parent company (for example, the Corporation), mobilizes its subsidiary or member company to deliver part of the work in the bid package, it must be specifically declared in this table. The evaluation of experience and competence of the bidder is based on the value and volume of work delivered by the parent company, subsidiary and member company in the bidding package. In case the bidder participating in bidding is not the parent company, this Form shall not apply.

(2) Specify the name of the subsidiary or member company.

(3) Specify the work delivered by the subsidiary or member company.

(4) Specify how many % the value of work delivered by the subsidiary or member company accounts for in the total bid proposal value.

Văn bản này được xác thực tại https://eoffice.vietsov.com.vn với số định danh: 13443/25-HSMT-PTM/BMĐH

FORM 12

SUMMARY OF BIDDING PRICE

Stt	Content	Bid price
1	Goods manufactured, processed outside Vietnam	(M_1)
2	Goods domestically manufactured, processed or goods manufactured, processed outside Vietnam, but already imported and being offered in Vietnam	(M_2)
3	Related services **(Not Applicable)**	
	Total bidding price **(Transfer to Application for Biding form)**	**(M_1) + (M_2)**

Legal representatives of bidder
(name, position, signature and stamp)

Văn bản này được xác thực tại https://eoffice.vietsov.com.vn với số định danh: 13443/25-HSMT-PTM/BMĐH

FORM 12A

BIDDING PRICE SCHEDULE OF GOODS MANUFACTURED, PROCESSED OUTSIDE VIETNAM

1	2	3	4	5	6	7	8	9
Line item	**Description of goods**	**Part number/ model of goods**	**MNF**	**CO**	**Unit**	**Required quantity**	**Unit price**	**Extended Price per line item (Col. 7x8)**
1	.....							
2	.....							
	.....							
*	***Total bidding price of goods including taxes, fees, charges (if any) arisen inside Vietnam and shall be taken into consideration exemption of import tax and VAT for imported goods from using List of exempted goods available for Vietsovpetro in Block 09-1.*** ***(Transfer to the Summary of Bidding Price Form)*** ***Note:*** ***- Request to describe all the works and the Goods following requirements in Scope of supply indicated in Technical requirement (attached).*** ***- Request to breakdown value for each line item and for all items in Scope of supply.***							**M1**

Legal representatives of bidder
(*name, position, signature and stamp*)

Note:
Col. (1) (2) (6) (7): In accordance with List of goods stipulated in Part 2 Chapter V – Scope of Supply; Bidder offers in Col. (3) (4) (5) (8) (9) (10) (11) (12)

For Vietnamese Bidders: The Bidders are requested to offer price on delivery to **Vietsovpetro warehouse, Rach Dua Ward, Ho Chi Minh City, S.R. Viet Nam**, including taxes, fees, charges (if any) arisen inside Vietnam and shall be taken into consideration exemption of import tax and VAT for imported goods from using List of exempted goods available for Vietsovpetro in Block 09-1.

For Foreign Bidders: the Bidders are requested to offer price on delivery term: CFR Vietsovpetro Port, Ho Chi Minh City, S.R. Viet Nam, Incoterm 2020. Bidders must clearly state in the offered price, as followings:

- Bidder intends to use inland transportation to delivery the goods from any discharge port in Vietnam to Vietsovpetro port: Yes/No
- If Bidder declares its attention to use inland transportation to deliver the goods from discharge port in Vietnam to Vietsovpetro port, Vietsovpetro will calculate and add FCWT into the offered price for comparison and evaluation.
- If Bidder declares NOT to use inland transportation to transport the goods to Vietsovpetro port, or makes no statement in this regard, Vietsovpetro will not calculate and add FCWT into the offered price for evaluation. Bidder shall acknowledge that, if any inland transportation is used during performance of Contract (if awarded to Bidder), Bidder will be subject to FCWT according to the applicable regulations of S.R Vietnam. FCWT incurred will be deducted from payment by Vietsovpetro.

When participating in bidding, all bidders have to take responsibility of researching, calculating and offering sufficient tax, fees, charges (if any) in response to tax rates, expenses, fees at the time 28 days prior to the stipulated deadline for bid submission.
In case the bidder announces the bidding price not including taxes, fees, charges then the Bid Proposal of the bidder will be rejected.

Văn bản này được xác thực tại https://eoffice.vietsov.com.vn với số định danh: 13443/25-HSMT-PTM/BMĐH

FORM 12B

BIDDING PRICE SCHEDULE OF GOODS DOMESTICALLY MANUFACTURED, PROCESSED OR GOODS MANUFACTURED, PROCESSED OUTSIDE VIETNAM, BUT ALREADY IMPORTED AND BEING OFFERED IN VIETNAM

1	2	3	4	5	6	7	8
Line item	**Description of goods**	**Unit**	**Required quantity**	**MNF, Country of origin , Part number, model of goods**	**Unit price**	**Extended Price per line item (Col. 4x6)**	**Taxes, fees, charges (if any)**
1	*Goods 1*					A1	T1
2	*Goods 2*					A2	T2
n	*Goods n*					An	Tn
Total bidding price of goods not including taxes, fees, charges (if any)						**A=A1+A2+ ...+An**	
Total value of taxes, fees, charges (if any)							**T=T1+T2+ ...+Tn**
Total bidding price of goods including taxes, fees, charges (if any) (Transfer to the Summary of Bidding Price Form)						**M_2=A+T**	

Legal representatives of bidder
(name, position, signature and stamp)

Notes:

Detailed T1, T2, Tn (type, calculation).

Col. (1), (2), (3), (4): In accordance with List of Goods as stipulated in **Part 4** – Scope of supply Requirement.

The bidder offers at Col. (5) (6) (7) (8). The bidder offers unit price at col (6), including necessary expenses to supply goods in response to requirements of Vietsovpetro, not including tax, fees, charges (if any) offered at col (8).

Col. (8) includes all tax, fees, charges (if any). When participating in bidding, bidders have to take responsibility of researching, calculating and offering sufficient tax, fees, charges (if any) in response to tax rates, expenses, fees at the time 28 days prior to the stipulated deadline for bid submission. In case the bidder announces the bidding price not including taxes, fees, charges then the Bid Proposal of the bidder will be rejected.

Văn bản này được xác thực tại https://eoffice.vietsov.com.vn với số định danh: 13443/25-HSMT-PTM/BMĐH

FORM 13

BIDDING PRICE SCHEDULE OF RELATED SERVICES
(NOT APPLICABLE)

Văn bản này được xác thực tại https://eoffice.vietsov.com.vn với số định danh: 13443/25-HSMT-PTM/BMĐH

FORM 15A

DECLARATION OF PREFERENTIAL GOODS (1)

No.	Item	Origin *[name of country, origin, marks and numbers, model/PN, manufacturer]*	Goods with domestic production cost of 25% or higher		Domestic cost declaration	
			Yes	No	Form 15B	Form 15C
	(I)	(2)	(3)	(4)	(5)	(6)
1	*Goods 1*		□	□	□	□
2	*Goods 2*		□	□	□	□
...	*...*					
n	*Goods n*		□	□	□	□

Legitimate representative of the bidder
[name, position, signature and stamp]

Notes:

(1), (2): The bidder fills consistently with Form No. 15B or Form No. 15C

(3), (4): The bidder checks the correct box for each goods.

(5), (6): For goods with a domestic production cost of 25% or higher, the contractor either declares the cost of domestic production using Form 15B (declaration of cost of import) or Form 15C (declaration of production cost in Vietnam).

Văn bản này được xác thực tại https://eoffice.vietsov.com.vn với số định danh: 13443/25-HSMT-PTM/BMĐH

FORM 15B

DECLARATION OF DOMESTIC PRODUCTION COSTS FOR PREFERENTIAL GOODS

(in the case of declaring cost of import)

No.	Item	Offered price in Bid proposal	Taxes	Cost of import	Cost of domestic production	Cost of domestic production (%)
		(I)	(II)	(III)	G* = (I) – (II) – (III)	D(%)=G*/G where đó G = (I) – (II)
	(1)	(2)	(3)	(4)	(5)	(6)
1	*Goods 1*					
2	*Goods 2*					
...	...					
n	*Goods n*					

Legitimate representative of the bidder
[name, position, signature and stamp]

Notes:

(1): The bidder fills in the checked goods in column (3) and (5) of Form No. 15A.

(2): The bidder fills in the unit price offered (including all taxes, fees, charges (if any).

(3), (4): The bidder self-declares.

(5), (6): The bidder fills.

Văn bản này được xác thực tại https://eoffice.vietsov.com.vn với số định danh: 13443/25-HSMT-PTM/BMĐH

FORM 15C

DECLARATION OF DOMESTIC PRODUCTION COST FOR PREFERENTIAL GOODS [(1)]
(in the case of declaring production costs in Vietnam)

STT No.	Tên hàng hóa Item	Offered price in Bid proposal	Taxes [(2)]	Cost of domestic production	Cost of domestic production (%)
		(I)	(II)	G*	D(%)=G*/G where G = (I) – (II)
	(1)	(2)	(3)	(4)	(5)
1	*Goods 1*				
2	*Goods 2*				
...	...				
n	*Goods n*				

Legitimate representative of the bidder
[name, position, signature and stamp]

Ghi chú Note:

(1): The bidder fills in the checked goods in column (3) and (6) of Form No. 15A.

(2): The bidder fills in the unit price offered (including all taxes, fees, charges (if any)..

(3), (4): The bidder self-declares.

(5): The bidder fills;

Văn bản này được xác thực tại https://eoffice.vietsov.com.vn với số định danh: 13443/25-HSMT-PTM/BMĐH

PART 2. SCOPE OF SUPPLY REQUIREMENTS

Chapter V. Scope of Supply Requirements

(Refers to attachment in Part 4.Appendices)

Văn bản này được xác thực tại https://eoffice.vietsov.com.vn với số định danh: 13443/25-HSMT-PTM/BMĐH

PART 3. CONDITIONS OF CONTRACT AND CONTRACT FORMS

FORM 16. Letter of Proposal Acceptance and Contract Award

FORM 17. Contract form

Văn bản này được xác thực tại https://eoffice.vietsov.com.vn với số định danh: 13443/25-HSMT-PTM/BMĐH

FORM 16

LETTER OF PROPOSAL ACCEPTANCE AND CONTRACT AWARD

_____,day ____ month ___ year ____

To: _____ *[name and address of awarded Contractor, hereinafter referred to as "Contractor"]*

Subj: Notification of Proposal Acceptance and Contract Award

Dear Sir/Madam,

In accordance with the Letter of Invitation to Tender (ITB No. …….) regarding tender process, we would like to notify that you are the tender winner for the items listed hereunder (scope of supply) based on the following basic terms and conditions:

- Scope of Supply: ……..
- Total price: ……...
- Delivery time: ……..
- Payment condition: TT / LC.

As soon as possible but not later than 07 working days from the date signing this Purchase Order, you should open the Performance Bond which is issued by banks / branches legally operated in Vietnam with amount 08% (eight percent) of Purchase Order and send to Vietsovpetro. The validity of the Guarantee is equal to the delivery time plus 60 calendar days.

Please acknowledge the receipt of this letter and send us your acceptance / comments as soon as possible but not later than 02 working days from the date of this letter.
Looking forwards to receiving your favorable reply.

LEGAL REPRESENTATIVE OF THE EMPLOYER
[Full name, title, signature and stamp]

Văn bản này được xác thực tại https://eoffice.vietsov.com.vn với số định danh: 13443/25-HSMT-PTM/BMĐH

CONTRACT FORM

GENERAL CONDITIONS OF CONTRACT (GCC)

1. Definitions.

As used in this Contract:

1.1 Company means Vietsovpetro, as specified in the Purchase Order;

1.2 "Purchase Order" means the documented Agreement between the Company and the Contractor, including all attached appendices and documents; herein called PO.

1.3 "Contractor" means the bidder who has been awarded PO by the Company (either Independent or Consortium Contractor) and is specified in the PO;

1.4 "Subcontractor" means a person, or entity, Contractor whose name is proposed in the list of subcontractors by the Contractor in the Proposal or who carries out any part of work proposed by the Contractor in the Bid Proposal. Subcontractor enters into the PO with the Contractor to perform part of work, as specified in the Proposal and accepted by the Company;

1.5 "PO Documents" means the documents listed in the PO, including any amendments, addendums thereto;

1.6 "PO Price" means the total price as specified in the PO for supplying Goods (and Related Services). PO Price include all taxes, fees and charges (if any).

1.7 "Date" means calendar day; "Year" means 365 days;

1.8 "Goods" means all of the machinery, equipment, commodities, spare parts, raw materials, consumer goods, medical material used at medical facilities;

1.9 "Related Services" means the services such as warranty, maintenance, overhaul, repair, supply of spare parts and/or other after-sale services including training, technology transfer;

1.10 "Completion" means the fulfillment of the Related Services by the Contractor in accordance with the terms and conditions set forth in the Contract;

1.11 "The Project Site" means the place named in the PO.

2. Order of precedence

The documents forming the Contract is arranged in the following order of precedence:

2.1 PO, including all Appendix;

2.2 Letter of Proposal Acceptance and Contract Award;

2.3 Bidding Result Approval;

2.4 General Conditions of Contract (GCC);

2.5 Proposal and Clarifications (if any);

2.6 Invitation for Bid and Bulletins (if any);

2.7 Any other document listed in the PO.

3. Governing law and Language

The Contract shall be governed by and interpreted in accordance with the laws of the Socialist Republic of Vietnam. The Contract shall be written in English.

4. Notice

4.1 Any notice from one Party to another relating to the PO shall be conducted in writing, to addresses specified in the PO. The term "in writing" means communicated in written form with proof of receipt.

4.2 A notice from one Party shall be considered as effective from the date the other Party receives it or from the effective date as specified in the notice, whichever comes later.

Văn bản này được xác thực tại https://eoffice.vietsov.com.vn với số định danh: 13443/25-HSMT-PTM/BMĐH

5. Performance Bond

5.1 Performance Bond shall be submitted to the Company no later than the date specified in Letter of Proposal Acceptance and Contract Award. Performance Bond shall be issued in one of following forms:

a) Submit a performance bond issued by a legally domestic bank or foreign bank's branch established under Vietnamese law;

b) Submit the certificate of guarantee insurance from a domestic non-life insurance enterprise or a branch of a foreign non-life insurance enterprise established under Vietnamese law.

The Performance Bond specified in Point a and b of this Clause is an unconditional guarantee (paid upon request), according to the form specified in the PO or another form approved by the Company.

5.2 Validity and formality is specified in the PO.

5.3. The Performance Bond will be paid to the Company to compensate for any loss arising from the Contractor's failure to fulfill their contractual obligations.

5.4 The return of Performance Bond is specified in the PO.

6. Subcontractor

6.1 The Contractor is allowed to sign contracts with Subcontractors in the List of proposed subcontractors specified in the Contract to perform part of work stated in the Proposal. The use of subcontractors shall not relieve the Contractor from any of his obligations. The Contractor shall take full responsibilities for work load, quality, progress and other responsibilities for work performed by Subcontractors.

The changing, supplement of subcontractors onto List of subcontractors or the change of subcontractor content stated in the Proposal shall be only conducted with reasonable grounds and Company's approval.

6.2 Contractor is not allowed to use subcontractors for other work which are not stated in the Bid Proposal.

6.3 Other requirements for subcontractor are specified in the PO.

7. Settlement of Disputes

7.1 The Company and the Contractor shall make every effort to resolve amicably by negotiation any disagreement or dispute arising between them.

7.2 If the dispute has not been resolved by such mutual negotiation within the specified duration in the PO from the date on which dispute arose, then either party may ask to commence arbitration under the dispute resolution mechanism, as specified in the PO.

8. Scope of Supply

Goods (and Related Services) shall be supplied as specified in Appendix No. 01 – Scope of Supply, which is considered as an integral part of this PO, including types of goods (and Related Services) supplied by the Contractor and their unit prices.

9. Delivery Schedule of Goods, Completion Date of Related Services (if any) and Documentations

Delivery Schedule of Goods, Completion Date of Related Services (if any) must be performed according to the provisions of the PO. The Contractor must provide invoice and other documents as described in the PO.

10. Contractor's Responsibilities

Contractor shall supply all Goods (and Related Services) (if any) in accordance with the Scope of Supply in accordance with GCC Clause 8, and follow the Delivery Schedule of Goods (and Completion Date of Related Services), as per GCC Clause 9.

Văn bản này được xác thực tại https://eoffice.vietsov.com.vn với số định danh: 13443/25-HSMT-PTM/BMĐH

11. Type of Contract and Contract Price

Type of contract: is specified in the PO.

Contract Price specified in the PO covers all expenses for complete supplying Goods (and Related Services) stated in the Price schedule of the PO.

12. Tax Adjustment

12.1 The Contractor shall be responsible for all costs of taxes, fees and charges incurred until the goods are delivered to the Company.

12.2 In case the Contractor is eligible for tax, fee and charge exemption or reduction, the Company shall use its best efforts to enable the Contractor to apply tax, fee and charge exemption or reduction policies.

12.3 Tax adjustment are carried out in accordance with the PO.

13. Advance Payment

13.1 The Company shall make advance payment to the Contractor with an amount stated in the Contract upon provision of Advance Payment Guarantee by the Contractor, with the value equal to the advance payment. The Advance Payment Guarantee shall be issued by a bank or credit organizations legally operating in Vietnam and shall remain effective until the advance payment has been repaid; the value of the Advance Payment Guarantee shall be progressively reduced by the amounts repaid by the Contractor. Interest shall not be applied on the advance payment.

13.2 The Contractor is to use the advance payment only for the purpose of executing the Contract. The Contractor has to prove that advance payment has been used for the right purpose by providing copies of invoices or other relevant documents to the Company. The Contractor shall be deprived of advance payment if advance payment is not used correctly.

14. Payment

14.1 Payments are made in accordance with the PO.

14.2 The payment currency shall be VND/USD/EUR in accordance with the PO.

15. Copyright

Copyright in all drawings, documents and records containing information and data submitted by the Contractor to the Company remains vested in the Contractor. Where such drawings, documents and records are provided to the Company directly or through the Contractor by a third party, copyright in such drawings, documents and records shall remain vested in that third party.

16. Use of documentations and information relating to Contract

16.1. The Company and the Contractor shall keep confidential any documents, data or other information relating to the contract provided directly or indirectly by one party to the other party, and shall not disclose such documents, data or information to a third party without the prior written consent of the other party, whether such documents, data or information are provided before, during or after the fulfillment or termination of the contract. The Contractor may transfer to a subcontractor appropriate documents, data and information provided by the Company for the subcontractor to perform its work under the contract; in this case, the subcontractor shall have an undertaking to the Contractor to keep such documents, data or information confidential.

16.2. The Company shall not use the documents, data and other information received from the Contractor for any purpose other than the contract. The Contractor shall not use the documents, data and other information received from the Company for any purpose other than the performance of the contract.

16.3. The obligations of the Company and the Contractor specified in under GCC Sub-Clauses 16.1 and 16.2 shall not apply to information that:

Văn bản này được xác thực tại https://eoffice.vietsov.com.vn với số định danh: 13443/25-HSMT-PTM/BMĐH

a) Information that the Company or Contractor needs to provide to the competent authority;

b) Information that has been or will be published through no fault of the Company or Contractor;

c) Information owned by one party at the time of publication and not previously provided directly or indirectly by the other party;

d) Information that a party lawfully receives from a third party that is not under an obligation to keep the information confidential.

16.4. The provisions of GCC Clause 16 shall not in any way modify any confidentiality commitments made by a party prior to the date of signing the contract relating to the provision of goods and services.

16.5. The provisions of GCC Clause 16 shall continue in effect after fulfillment or termination of the contract for any reason.

17. Technical Specifications and Standards

Goods (and Related Services) supplied under this Contract shall conform to the technical specifications and standards mentioned in Appendix No. 01 - Scope of Supply; and when no applicable specification or standard is mentioned, the applicable specification or standard shall be equivalent or superior to the official standards currently applied in the Goods' country of origin.

18. Packing

The Contractor shall provide such packing of the Goods as is required in the PO and is suitable with each type of transportation means during transit to their final destination. The packing shall be sufficient to prevent the Goods from damage or deterioration due to rough handling and other environmental impacts. Packing case size and weights shall take into consideration the conditions of transportation such as distance, type of transport mean, infrastructure, etc. from origin to specified destination.

19. Insurance

Goods supplied in the Contract shall be fully insured to cover losses or damages occurred in production process, transportation, stocking and delivery as described in the PO.

20. Transportation and Incidental Services

Conditions about Transportation and Incidental Services are specified in the PO.

21. Goods Inspections and Testing

The Contractor must test and take inspection of Goods and related services relevant to the provisions of the Contract and bear all testing and inspection costs according to the provisions of the Contract.

22. Damages

Damages are specified in the PO.

23. Warranty

The Contractor warrants that all the Goods supplied under Contract are new, unused, and the quality is in accordance with manufacture standard, unless otherwise provided in the Contract. The Contractor further warrants that the Goods shall be free from defects that cause problems under normal use.

Warranty period and place for the Goods is specified in Article 9 of the PO.

24. Force Majeure

24.1 For purposes of this Clause, "Force Majeure" means events beyond the control and foreseeability of the parties, such as wars, revolutions, fires, natural disaster, floods, epidemics, quarantine restrictions.

Văn bản này được xác thực tại https://eoffice.vietsov.com.vn với số định danh: 13443/25-HSMT-PTM/BMĐH

If a Force Majeure situation arises, the affected party shall promptly notify the other party in writing of such condition and the cause thereof. The affected party also has to give given by authorised organisation in the place of event.

During the Force Majeure, Contractor shall continue to perform its obligations under the Contract as far as is reasonably practical, and shall seek all reasonable alternative means for performance not prevented by the Force Majeure event. In this case, the Company shall consider reimbursing the Contractor necessary and reasonable additional and necessary costs beared by the Contractor.

24.2 Neither the party shall be liable for forfeiture of its Performance, liquidated damages, or if and to the extent that its delay in performance or other failure to perform its obligations under the Contract is the result of an event of Force Majeure.

In case dispute arising due to Force Majeure shall be resolved according to GCC Clause 7.

25. Amendment, Addendum of Contract

25.1 Amendments to the Contract shall be applied in the following cases:

(a) Changes in drawings, designs, or technical requirements, where Goods to be furnished under the Contract are to be specifically manufactured for the Company;

(b) Changes in method of goods transportation or packing;

(c) The place of delivery;

(d) Changes of related services;

~~(e)~~ The schedule of delivery.

25.2. In case the amendment, addendum to the work content of the contract specified in Clause 25.1 GCC change the cost or implement time of any terms in the contract, price or delivery time and the completion date of the relevant service must be make corresponding adjustments and the two parties will amend the contract. The Contractor's request to adjust the contract's price, delivery time or completion date must be made within 28 days from the date the Contractor receives the Company's request to amend the scope of work.

25.3. In case the Contractor provides goods with a new version of the same manufacturer, the same origin, with technical requirements, configuration, parameters... equivalent or better than the version that the Contractor proposed in their proposals, the Contractor must notify the Company in writing for the Company's consideration. In this case, based on usage needs, the Company could accept the Contractor's proposal provided that the unit price and other terms and conditions of the contract remain unchanged.

25.4. In case of performing related services that has not stated in the contract, the Company and Contractor will negotiate to ensure the unit price is consistent with the market price.

25.5. The Company and the Contractor will negotiate to sign a contract's amendment in case of amendments. All transactions during the implementation of the Contract are made in writing by the Parties and sent by post or by fax number to the registered address or fax number of each Party specified in the Contract and email to the email address according to the form in Appendix 4 (A, B) attached.

In case the Contractor's proposal is accepted by the Company and it makes the reduce of the contract price, the Company shall pay the Contractor with the rate that specified in the Contract to the price reduction value. And if it makes the increase of the contract price, the Company shall pay the Contractor the arising value.

26. Amendment in Delivery Schedule

26.1. During the contract implementation time, in case of unfavorable conditions arise that prevents the Contractor or subcontractor from providing goods and performing related services as prescribed in Clause 9 GCC, The Contractor must promptly notify the Company in writing about the delay, reason, and duration of delay. Based on the Contractor's notice, the Company must

Văn bản này được xác thực tại https://eoffice.vietsov.com.vn với số định danh: 13443/25-HSMT-PTM/BMĐH

quickly consider the situation and extend the contract. In case the Company agrees to extend the contract, the two parties will negotiate to sign amendments, supplement the contract.

26.2. Except the force majeure specified in Clause 24 GCC, if the Contractor delivers the Goods or completes related services lately, he is obliged to compensate the Company as prescribed in Clause 22 GCC.

27. Contract Termination

27.1. Contract Termination due to faults:

a) The Company may terminate partial or all of the Contract without prejudice to other remedies for breach of contract by informing the Contractor by letter about the breachs in the contract in the following cases:

(i) The Contractor cannot deliver the goods or part of the goods within the shipment time as specified in the contract, or within the extension period as specified in Clause 26 GCC;

(ii) The Contractor does not perform any other obligations under the contract;

(iii) The Company show that the Contractor violated one of the prohibited acts specified in Article 16 of the Bidding Law during the bidding process or contract implementation;

b) In case the Company terminates partial or all of the contract according to Point a of this Clause, the Company may purchase similar goods and related services that have not been performed according to the terms and conditions and methods. The Contractor shall be responsible for compensating the Company for arising costs from purchasing of such similar goods and services. However, the Contractor must continue to perform the part of the contract that was not terminated.

27.2. Contract Termination due to insolvency

In case the Contractor goes bankruptcy or becomes insolvency, the Company may terminate the contract at any time by sending notice to the Contractor. In such case, the Contract shall terminate and the Contractor shall not be entitled to compensation provided that termination shall not fact or prejudice any rights of action or remedy of the Company at any time.

28. Patent indemnity

28.1. The Contractor shall, subject to the Company's compliance with GCC Sub-Clause 28.2, indemnify and hold harmless the Company and its employees and officers from and against any and all suits, actions or administrative proceedings, claims, demands, losses, damages, costs, and expenses of any nature, including attorney's fees and expenses, which the Company may suffer as a result of any infringement or alleged infringement of any patent, utility model, registered design, trademark, copyright, or other intellectual property right registered or otherwise existing at the date of the contract by reason of:

a) The installation of goods by the Contractor or the use of goods in Vietnam;

b) The sale of the products produced by goods.

Such indemnity shall not cover any use of goods or any part thereof other than for the purpose indicated by or to be reasonably inferred from the contract, neither any infringement resulting from the use of goods or any part thereof, or any products produced thereby in association or combination with any other equipment, plant, or materials not supplied by the bidder, pursuant to the contract.

28.2. If any proceedings are brought or any claim is made against the Company arising out of the matters referred to in GCC Sub-Clause 28.1, the Company shall promptly give the Contractor a notice thereof, and the Contractor may at its own expense and in the Company's name conduct such proceedings or claim and any negotiations for the settlement of any such proceedings or claim.

28.3. If the Contractor fails to notify the Company within 28 days after receipt of such notice, that it intends to conduct any such proceedings or claim, then the Company shall be free to conduct the same on its own behalf.

Văn bản này được xác thực tại https://eoffice.vietsov.com.vn với số định danh: 13443/25-HSMT-PTM/BMĐH

28.4. The Company shall, at the Contractor's request, afford all available assistance to the Contractor in conducting such proceedings or claim, and shall be reimbursed by the Contractor for all reasonable expenses incurred in so doing.

28.5. The Company shall indemnify and hold harmless the Contractor and its employees, officers, and subcontractors from and against any and all suits, actions or administrative proceedings, claims, demands, losses, damages, costs, and expenses of any nature, including attorney's fees and expenses, which the Contractor may suffer as a result of any infringement or alleged infringement of any patent, utility model, registered design, trademark, copyright, or other intellectual property right registered or otherwise existing at the date of the contract arising out of or in connection with any design, data, drawing, specification, or other documents or materials provided or designed by or on behalf of the Company.

29. Change in laws and regulations

Unless otherwise specified in the contract, if after the date of 28 days prior to deadline for submission of bids, any law or regulation is promulgated, abrogated, or changed Vietnam that subsequently affects the Delivery Date and/or the contract Price, then such Delivery Date and/or Contract Price shall be correspondingly increased or decreased, to the extent that the Contractor has thereby been affected in the performance of any of its obligations under the contract. Notwithstanding the foregoing, such additional or reduced cost shall not be separately paid or credited if the same has already been accounted for in the price adjustment provisions where applicable, in accordance with GCC Clause 11.

30. Export restriction

Any to provide deliveries or services, provided that the Contractor can declare to the satisfaction of the Company that it has completed all formalities in a timely manner, including applying for permits export restrictions which arise from trade regulations from a country supplying the goods or services, and which substantially impede the Contractor from meeting its obligations under the contract, shall release the Contractor from the obligation, authorizations, and licenses necessary for the export of the goods or services under the terms of the contract. Termination of the contract on this basis shall be for the Company's convenience.

Văn bản này được xác thực tại https://eoffice.vietsov.com.vn với số định danh: 13443/25-HSMT-PTM/BMĐH

(FOR INTERNATIONAL CONTRACTOR)

PURCHASE ORDER

No. ……

_____, day ___ month ___ year ____

To:

Fax:

Attn.:

Subj.: PURCHASE ORDER No..... for the supply of …

Total number of pages inclusive of this one: ...

Dear Sir,
Thank you for your offer **Provision of …….. (VSP's Inquiry No. …….).** We are pleased to confirm this Purchase Order on the terms and conditions as follows:
This transaction is made between:

VIETSOVPETRO
105 Le Loi Street, Vung Tau Ward, Ho Chi Minh City, S.R.Vietnam
Hereinafter referred to as the Buyer.

AND

……
Hereinafter referred to as the Seller.

ARTICLE 1: OBJECT

The Seller agrees to sell and the Buyer agrees to buy **……. (VSP's Inquiry No. …….)** hereinafter referred to as "Goods", with the quantity, specifications, scope of supply as described in Appendix No. 01 (in …. pages) which are considered as an integral part of this Purchase Order.

- All Goods are manufactured in …….
- The Goods will be used for Petroleum activities in Block ….. of Vietsovpetro.

ARTICLE 2: PRICE AND TOTAL VALUE

2.1 The unit prices for the Goods are specified in the Appendix No. 01 of this Purchase Order.

2.2 The total value of this Purchase Order is **USD ……. -** CFR Vietsovpetro Port, Vungtau City, S.R Vietnam – Incoterms 2020.
(In words: ……)

2.3 The price as mentioned above is understood CFR – Vietsovpetro Port, Vungtau City, S.R Vietnam - Incoterms 2020, not subject to any alteration and includes value of the Goods, packing, marking, painting, assembling, testing, inspection, manufacturer's certificates, freight, export license if necessary, guarantee services if any etc… in accordance with terms and conditions of this Purchase Order as well as all duties levied in connection with the performance of this Purchase Order outside the Buyer's country. FCWT (if any) shall be at Buyer's account.

ARTICLE 3: DELIVERY

Văn bản này được xác thực tại https://eoffice.vietsov.com.vn với số định danh: 13443/25-HSMT-PTM/BMĐH

3.1 Delivery date: Not later than **…. calendar days** from the date of Letter of Award (LOA) to the date that the Goods arrival at Vietsovpetro port (included navigation period and transportation time).

Earlier shipment is allowed.

Partial shipment is allowed: max ….. shipments.

Transshipment and multimodal transport are allowed at Seller's care and account.

3.2 Shipment to be made from …. port to Vietsovpetro Port, Ho Chi Minh City, S.R.Vietnam on the term CFR - Vietsovpetro Port, Ho Chi Minh City, S.R.Vietnam – Incoterms 2020, except the otherwise stated in this Purchase Order.

For the mode of transport by sea or by air, in case the first import border gate (which is the port of discharge stated on the bill of lading or the customs declaration) is not Vietsovpetro port, Vungtau City, S.R. Vietnam (the port specified in the contract) incurring insland transportation to the port specified, the Seller will be subject to Foreign contractor with holding tax (FCWT) according to the current regulations of S.R Vietnam. Any extra transport, warehouse expenses, other charges and FCWT incurred will be deducted from payment by the Buyer.

In case the actual number of shipments exceeds the number specified in the Purchase Order, the Seller shall be responsible for all costs incurred for the shipments exceeding those stipulated in the Purchase Order, and these incurred costs shall be deducted from payment by the Buyer.

3.3 The Delivery Date is understood as: The date that Goods arrival at Vietsovpetro port (included navigation and transportation time).

The date of arrival mention here will following the date of arrival of the Goods at Vietsovpetro port that indicated in "Arrival Notice" of Vessel Agent.

3.4. The carrying vessel must have ISM certificate.

ARTICLE 4: NOTICE OF SHIPMENT AND DOCUMENTATION

4.1 The Seller shall notify the Buyer by fax as soon as possible, but not later than 03 working days from the Bill of Lading date the following information regarding the shipment:
- Purchase Order Number
- Name of Goods, quantity and value
- Number of cases, gross weight, measurement
- Bill of Lading number and its date.
- Name of vessel, nationality.
- Port of exit, ETD/ ETA
- Address, telephone, fax of the shipping agent in Vietnam.
- Any other special instructions, which should call to the Buyer's attention.

The Seller shall be responsible for any losses, expenses which may be occurred due to incorrect information from the Seller to the Buyer.

4.2 Required shipping document for purchased goods.

4.2.1. By T/T:

Immediately but not later than 03 working days from the Bill of lading date the Seller shall send by Express courier or FEDEX or DHL at the Seller's expenses to "Vietsovpetro" - 105 Le Loi, Vung Tau Ward, Ho Chi Minh City, SR Vietnam the following shipment documents:

1. ***Clean on board Bill of Loading*** evidencing shipment from …. port with destination Vietsovpetro Port, Vungtau City, S.R.Vietnam, consignee: Vietsovpetro 105 Le Loi Street, Vungtau City, S.R. Vietnam, marked "Freight prepaid": 02 Surrender and 02 copies.

Văn bản này được xác thực tại https://eoffice.vietsov.com.vn với số định danh: 13443/25-HSMT-PTM/BMĐH

2. ***Detailed Packing List*** showing the content of each case or lot, gross and net weight: covering Goods as specified in Appendix No. 01 to this Purchase Order: 02 originals and 02 copies.

3. ***Signed Commercial Invoice*** issued by the Seller for the respective shipment value indicating CFR Vietsovpetro Port, Vungtau City, S.R.Vietnam, with itemized and total prices: 02 originals and 02 copies.

4. ***Certificate of Quality and Quantity*** issued by manufacturer: *as stipulated in Technical Requirements*.

5. ***Certificate of Origin*** issued by the Chamber of Commerce in Manufacturer's / Exporter's country: *as stipulated in Technical Requirements*.

6. Other Certificates *as stipulated in Technical Requirements*.

7. ***Certificates of Guarantee*** issued by the Seller for the quality of Goods for the period of … months from the date of delivery: Original.

8. ***Export License*** **or** ***Letter of the Seller*** stating that Export License is not necessary for export: 01 original and 02 copies.

9. ***Seller's cable or telex, fax*** advising the shipment details (Invoice value, Bill of Lading date) to Vietsovpetro: 01 copy.

All the copies of the documents shall be legible, otherwise the photocopy of the original shall be furnished.

Seller shall be submit for Vendor data register list (VDRL) to Buyer for review/approval not later than 02 weeks from the date of Letter of Intent.

4.2.2. By L/C:

Immediately but not later than 05 working days from the Bill of lading date the Seller shall send by Express courier or FEDEX at the Seller's expenses to Vietsovpetro - 105 Le Loi Str., Vung Tau Ward, Ho Chi Minh City, S.R. Vietnam the following shipment documents unless otherwise stated:

1. ***Clean on board Bill of Loading*** evidencing shipment from …. port with destination Vietsovpetro Port, Vungtau City, S.R.Vietnam, consignee: Vietsovpetro 105 Le Loi Street, Vungtau City, S.R. Vietnam, marked "Freight prepaid": 02 Surrender and 02 copies.

2. ***Detailed Packing List*** showing the content of each case or lot, gross and net weight: covering Goods as specified in Appendix No. 01 to this Purchase Order: 02 originals and 02 copies.

3. ***Signed Commercial Invoice*** issued by the Seller for the respective shipment value indicating CFR Vietsovpetro Port, Vungtau City, S.R.Vietnam, with itemized and total prices: 02 originals and 02 copies.

4. ***Certificate of Quality and Quantity*** issued by manufacturer: *as stipulated in Technical Requirements*.

5. ***Certificate of Origin*** issued by the Chamber of Commerce in Manufacturer's / Exporter's country: *as stipulated in Technical Requirements*.

6. Other Certificates *as stipulated in Technical Requirements.*

7. ***Certificates of Guarantee*** issued by the Seller for the quality of Goods for the period of …months from the date of delivery: Original.

8. ***Export License*** **or** ***Letter of the Seller*** stating that Export License is not necessary for export: 01 original and 02 copies.

9. ***Seller's cable or telex, fax*** advising the shipment details (Invoice value, Bill of Lading date) to Vietsovpetro: 01 copy.

All the copies of the documents shall be legible; otherwise the photocopy of the original shall be furnished.

Văn bản này được xác thực tại https://eoffice.vietsov.com.vn với số định danh: 13443/25-HSMT-PTM/BMĐH

4.3 If shipment to be made through a FIATA Freight Forwarder, under Through or Combined Transport Bill of Lading, the Seller shall have to send the Buyer by fax the copy of Local Bill of Lading of the last distance and inform the Buyer the name, contract address of the Transportation Agent in Vietnam.

4.4 Any storage demurrage or other charges due to non-receipt of shipping advice and/or shipping documents by the Buyer from the Seller or the Seller's agent as well as due to incorrect shipping document shall be at the Seller's account.

4.5 From the date of Letter of Award (LOA), The Seller must provide the Buyer with a regular report once a month on the first day of the month, showing the process of manufacturing, manufacturing, testing and supplying the Goods.

This report please send to email: .....@vietsov.com.vn and c/c: …...hq@vietsov.com.vn. The Seller must immediately report to Buyer the content of the report at least includes the following contents:

a) Description of the work completed in the implementation stage;
b) Highlighting delays or delays that are likely to occur and the causes of delays affecting production progress and providing measures to ensure progress;
c) Change progress if any. During the implementation of the contract, all contacts of Seller send an official letter for VSP leader and send a copy by email: .....@vietsov.com.vn and c/c: .....@vietsov.com.vn.

4.6 Seller must ensure to provide all necessary documents as required in Article 4.2 of this Purchase Order when delivering goods to Buyer. In case Seller delivers goods to Buyer but does not have all the required documents, Buyer agrees to allow Seller to temporarily store the goods at the warehouse to wait for the complete collection of documents at no extra charge for first 5 calendar days. From the 6th day onwards, Seller will have to pay Buyer the storage cost of the shipment according to the current storage unit price of Buyer that is applied to Buyer's customers. This storage cost that will be deducted directly from the invoice for this Purchase Order or from any other payments of the Purchse Order that duly signed by both parties.

ARTICLE 5: PACKING

5.1 Goods supplied under this Purchase Order shall be packed in accordance with international standard for export packing to ensure safety of Goods from damages and corrosion during transportation and suitable for crane operations and handling.

5.2 Before packing, all metal parts of Goods must be preserved with proper grease and wrapped in waterproof strong paper to ensure protection from any damage and corrosion during their transportation and storage in Buyer's country within the guarantee period.

5.3 The Seller shall provide for each package a detailed packing list in English indicating the Purchase Order number, description of items, gross and net weight. One copy of the packing list in a waterproof envelope shall be put into each case with the Goods, the other copy should be fastened to the outer side of the wooden case and shall be covered with a metal plate nailed to the case. For steel cases, both copies of the packing list should be put into the cases.

5.4 The Seller shall be fully responsible for loss, damage of breakage of the Goods and/or rusting/corrosion resulting from defective or inadequate packing.

ARTICLE 6: MARKING

6.1 Marking shall be done in three sides of each case containing Goods, on the two opposite sides and on the top and contain the following information in the English language:

Shipper: Consignee: VIETSOVPETRO 105 Leloi Street, VungTau, S.R.VietNam Purchase Order No. Case No. /

Văn bản này được xác thực tại https://eoffice.vietsov.com.vn với số định danh: 13443/25-HSMT-PTM/BMĐH

Dimensions: Length x Width x Height in cm Gross WEIGHT (KGS) Net Weight (KGS) Airport/Port of Destination

6.2 The marking must be clearly done by indelible paint and not less than 5 (five) cm high, unless restricted by the size of the case. Where necessary, the Seller shall conspicuously mark on the side of the case appropriate international marks according to the different characteristics, the special marking "Top", "Bottom", "Handle with care", handling places for reloading.

6.3 For the oversized cases (more than 10M long), as well as for the case weighing 500 kgs and more, or if the height of the case exceeds one meter, the center of gravity shall be clearly shown with bright indelible paint with sign (+) on the end and side faces of the cases.

6.4 The case number shall be indicated by a fraction, the numerator shows the ordinal number of the cases, and the denominator indicates the overall quantity of the cases into which completely delivered Goods are packed.

6.5 The Seller shall be responsible for any kind of losses and/or damages of the Goods during loading and unloading as well as for its transportation as a consequence of improper or insufficient marking, as well as for any extra transportation and warehouse expenses, losses connected with misaddressed delivery of the Goods due to incomplete marking.

ARTICLE 7: PAYMENT CONDITIONS

By T/T:

7.1 One hundred percent (100%) of shipment value shall be paid by Telegraphic Transfer to the Seller's account within thirty (30) days from the date of the Certificate of quantity and condition issued by Independent Inspection Company at Buyer's warehouse after receipt of the Goods and a full sets of documents above mentioned in Articles 4.

7.2 Transfer fee shall be on the Buyer's account.

7.3 All the banking fees, including bank commission and other charges associated with the advising and corresponding bank shall be on the Seller's account.

7.4 All charges in connection with the change of payment's form/ conditions (whether occurred inside or outside S.R.Vietnam), due to Seller's/Buyer's request, shall be at the Seller's/ Buyer's account.

7.5 The Seller provides Seller's bank account number.

By L/C:

7.6 As soon as possible, but not later than fifteen (15) days after the date of Seller's reconfirmation the Buyer will open through the Bank for Foreign Trade of Vietnam, Vung Tau Branch, (Vietcombank Vung Tau) or other bank in Vietnam the Irrevocable and Unconfirmed Letter of Credit in favour of the Seller covering the total Purchase Order value with the content as per Appendix 1 which is to be considered as an integral part of this Purchase Order.

The validity of the Letter of Credit shall cover the Delivery Date plus 21 days.

7.7. Payment under this Letter of Credit shall be made for shipment and in the following installments to the Seller:

7.7.1. First Installment: 90% (Ninety percent) of the shipment value shall be made upon presentation of the following documents in English language by the Seller to the Bank:

1. ***Clean on board Bill of Loading*** evidencing shipment from …. port with destination Vietsovpetro Port, Vungtau City, S.R.Vietnam, consignee: Vietsovpetro 105 Le Loi Street, Vungtau City, S.R. Vietnam, marked "Freight prepaid": 02 Surrender and 02 copies.

Văn bản này được xác thực tại https://eoffice.vietsov.com.vn với số định danh: 13443/25-HSMT-PTM/BMĐH

2. ***Detailed Packing List*** showing the content of each case or lot, gross and net weight: covering Goods as specified in Appendix No. 01 to this Purchase Order: 02 originals and 02 copies.

3. ***Signed Commercial Invoice*** issued by the Seller for the respective shipment value indicating CFR Vietsovpetro Port, Vungtau City, S.R.Vietnam, with itemized and total prices: 02 originals and 02 copies.

4. ***Certificate of Quality and Quantity*** issued by manufacturer: *as stipulated in Technical Requirements*.

5. ***Certificate of Origin*** issued by the Chamber of Commerce in Manufacturer's / Exporter's country: *as stipulated in Technical Requirements*.

6. Other Certificates *as stipulated in Technical Requirements*.

7. ***Certificates of Guarantee*** issued by the Seller for the quality of Goods for the period of … months from the date of delivery: Original.

8. ***Export License*** **or** ***Letter of the Seller*** stating that Export License is not necessary for export: 01 original and 02 copies.

9. ***Seller's cable or telex, fax*** advising the shipment details (Invoice value, Bill of Lading date) to Vietsovpetro: 01 copy.

All the documents presented by the Seller to the Bank shall be duly certified by the Seller as correct, due and payable under the terms and conditions of the Letter of credit.

Payment for incomplete delivery will not be allowed.

7.7.2. Second Installment: Ten percent (10%) of shipment value shall be payable against confirmation of the Buyer to the Bank within 30 days after the date of the Certificate of quantity and condition issued by Independent Inspection Company at Buyer's warehouse and Invoice.

7.8 The Letter of Credit shall be subject to the Uniform Customs and Practice for Documentary credit of International Chamber of Commerce (UCP No. 600), 2007 revision.

7.9 All the banking fees, including bank commission charges and other charges associated with the opening bank shall be on the Buyer's account.

7.10 All the banking fees, including bank commission charges and other charges associated with the advising and corresponding bank shall be on the Seller's account.

7.11 All charges in connection with the amendments of the Letter of Credit (whether occurred inside or outside S.R. Vietnam), due to Seller's/Buyer's request, shall be at the Seller's/ Buyer's account.

7.12 All charges associated with any extension of the Letter of credit arising due to delay in delivery as stated in Article 3 of this Purchase Order shall be at the Seller's account.

7.13 The Letter of Credit is to be automatically cancelled within 15 days from the date of opening, if the Buyer does not receive the original Performance Bond in favour of the Buyer with the content as stated in Appendix 2 of this Purchase Order.

ARTICLE 8: GOODS'S SURVEY

8.1 The survey at Buyer's warehouse of the received Goods shall be made by Independent Inspection Company with issuing a Certificate of quantity and condition.

8.2 The Certificate of quantity and condition issued by Independent Inspection Company for the Goods supplied under this Contract at Buyer's warehouse shall be legal document for Buyer to make claim to the Seller.

ARTICLE 9: GUARANTEE

9.1 The Seller guarantees that the Goods supplied under this Purchase Order shall be of the highest quality and designed standard as set in Manufacture's country for that type of Goods and shall

Văn bản này được xác thực tại https://eoffice.vietsov.com.vn với số định danh: 13443/25-HSMT-PTM/BMĐH

meet current technological achievements as required, and shall be suitable for normal operation in tropical area condition regarding environment temperature up to 45 Deg.C, humidity up to 100%.

9.2 Proper material of high quality shall be used for manufacturing the Goods to be supplied under this Contract, and the Seller guarantees that the Goods and its quality, quantity shall be fully in compliance with the technical specifications and scope of supply as mentioned in Article No.1 to this Purchase Order.

9.3 The Seller guarantees normal operation of all Goods to be supplied under this Purchase Order ……. *months* from the date of delivery.

9.4 Should the Buyer reveal any defect within the guarantee period or if the quality of Goods supplied under this Purchase Order is not in compliance with terms and conditions of this Purchase Order and its appendix, the Buyer shall notify the Seller by telex/ fax of such defect. To substantiate the claims the Buyer shall submit to the Seller the official inspection report issued by Independent Inspection Company. The report of quality issued by Independent Inspection Company shall be legal document for Buyer to make claim to the Seller.

Any claim relating to defects or non-conformity, which occurred during the guarantee period of the Goods with the technical conditions as stated in the Appendix No.1 shall be submitted to the Seller not later than three months after expiration of the guarantee period.

9.5 The Seller shall inform the Buyer about the results of consideration of claim not later than 14 days after receipt of the Buyer's claim telex/fax and the Seller shall eliminate the revealed defects, at his own expenses, at the Buyer's fist request without any delay, but not later than 15 days after receipt of the Buyer's claim telex/fax and/or replace the defective parts or the missing parts by the new ones of good quality on the condition CIF-Vietsovpetro port (or CIP-Tan Son Nhat airport), S.R.Vietnam. All charge associated with return of the defective Goods to the Seller and delivery the new one to Buyer shall be at the Seller's account.

9.6 Should the Seller fail to eliminate the defects as claimed, or fail to deliver new Goods within the stipulated time in Article 9.5, the Buyer shall charge to the Seller the agreed and liquidated damages at the rate as per Article 10, the period of the above penalty shall be counted from the date of which the Seller receives the Buyer's official claim to the date of elimination of the defects or to the delivery date of the new replacement Goods minus 15 days or the Buyer shall have the right to eliminate such defects at the Seller's expenses without prejudice to its right in respect of the guarantee, and the Seller undertakes to defray at fist Buyer's request all actual expenses incurred in respect of such elimination and the agreed and liquidated damages at the rate 8% value of non-used Goods due to defect found. Small defects not requiring the Seller's participation and/or permitting no delay will be eliminated by the Buyer and charged at normal costs to the Seller.

9.7 The guarantee period for replaced part shall be equal to that indicated in Article 9.3 and the guarantee period for Goods will be extended by the time during which it was not used due to defect found.

9.8 When the elimination and/or replacement is made and all related costs, expenses are settled, the claim is to be considered as finally settled.

All the claim amount, for which the Seller is to be responsible to the Buyer under this Contract may be deducted by the Buyer from the payment of the Contract value or may be covered by act of law or otherwise from the Seller to be agreed by both parties.

ARTICLE 10: AGREED AND LIQUIDATED DAMAGES

10.1. The Seller must deliver goods as specified in Appendix 01 and by the date as stipulated in the Purchase Order. If delayed in delivery the Seller shall pay to the Buyer the agreed and liquidated damages as follows:

- Delay in the first four weeks: 1.00% of breached purchase order value per week.

Văn bản này được xác thực tại https://eoffice.vietsov.com.vn với số định danh: 13443/25-HSMT-PTM/BMĐH

- Delay in each following week: 1.50% of breached purchase order value per week.

When calculating the amount of the agreed and liquidated damages: One week is to be defined as 07 days with 04 days or more than 04 days to be considered as one week, 03 days and less will not be counted. The agreed and liquidated damages calculated on the value of the whole group having delayed items until the total amount of agreed and liquidated damages for delay shall not exceed 08% of breached purchase order value.

If The Seller delivers Goods in number of shipments as specified in Appendix no. 01, then the Delivery Time shall be counted as the last portion's delivery. Goods of the previous portions are only recorded at the warehouse of the Buyer until the last portion of Goods is delivered.

10.2. If The Seller does not deliver the sufficient quantity and types of goods as prescribed in Appendix 01 of this Purchase Order, in that case:
- The Seller shall pay to the Buyer the agreed and liquidated damages an amount equal to 08% of the Purchase Order.
If The Seller does not deliver enough quantity and type of goods for Purchase Order (as specified in Appendix 01 of this Contract):
- The Buyer has the right to refuse the entire Purchase Order. The Seller shall pay to the Buyer the agreed and liquidated damages an amount equal to 08% of the Purchase Order.
Or;
- The Buyer has the right to receive the rest of the Purchase Order, then, the Seller shall pay to the Buyer the agreed and liquidated damages an amount equal to 08% of the Purchase Order.

10.3. If the number of shipments exceeds the ones prescribed in Article 3, then the Seller is responsible for paying the extra costs for the exceeded shipments according to the prevailing prices which are applied by the Buyer to the current customers.

10.4. If the supplied goods do not conform to the quality as specified in Article 2 of the Purchase Order, the Buyer shall be entitled to refuse those Goods and payment of the Purchase Order, the Seller shall pay to the Buyer the agreed and liquidated damages as stipulated in Article.10.2. The Buyer shall be entitled to accept / not accept that the Seller will provide new goods to replace the defective ones.

10.5.1. If delay in delivery exceeds 60 days against the stipulated date as in Article 3.1 of this Purchase Order, except the Force majeure circumstances, the Buyer shall be entitled to:

a) Appoint a third party capable of providing goods/ goods with services. In that case, The Seller is responsible for signing a contract with that appointed party to continue performing the work.
Or;
b) Directly enter into contract with that third party buying goods / goods and services to continue performing the contract work. In that case, The Seller must pay the difference amount and other related costs and charges (if any).
Or;
c) Unilaterally terminate the Purchase Order and in this case The Seller shall pay to the Buyer the agreed and liquidated damages an amount equal to 08% of the Purchase Order value.

10.5.2. If the Seller delayed in delivery of one portion more than 60 calendar days as specified in Article 3.1 of this Purchase Order except the Force majeure circumstances, the Buyer shall be entitled to:

a) Appoint a third party capable of providing goods / goods with services. In that case, The Seller is responsible for signing a contract with the designated party to continue performing the work.
Or;
b) Directly enter into contract with the third party buying goods / goods and services to continue performing the contract work. In that case, The Seller must pay the difference

Văn bản này được xác thực tại https://eoffice.vietsov.com.vn với số định danh: 13443/25-HSMT-PTM/BMĐH

amount and other related costs and charges (if any).

c) Unilaterally terminate the Purchase Order and in this case The Seller shall pay to the Buyer the agreed and liquidated damages an amount equal to 08% of the PurchaseOrder value.

10.6. The total amount of the agreed and liquidated damages should not exceed 08% the Purchase Order value.

10.7. The amount of the agreed and liquidated damages stated in Article 10 of this PurchaseOrder is exclusive of VAT and import tax.

10.8. The Buyer shall be entitled to:

1) Deduct the amount of agreed and liquidated damages from the payment for this Purchase Order or from any payment for other Purchase Order (if any) between both sides.

2) Request the Seller's issuing Bank to pay the amount equal to the Performance Bond's value;

3) The Buyer shall make a written request to the Seller for the amount of agreed and liquidated damages payment. In all cases, The Seller should have to make commitment to the Buyer for the agreed and liquidated damages payment.

10.9. Any compensation for damage (if any) shall be made in accordance with the law of Viet Nam.

ARTICLE 11: PERFORMANCE BOND

11.1 As soon as possible within 07 (seven) calendar days from the date signing Purchase order (specified on page 01 of the contract), the Seller shall inform the Buyer by fax/telex of the issuance of the Performance Bond covering **Egiht percents (08%)** of the Purchase Order amount, with validity until the delivery date plus 60 days, issued by the banks/branches legally operated in VietNam, acceptable to the Buyer, informing the number, date of issue and full content. In case the Performance Bond issued by the banks/branches legally operated in VietNam, the Seller shall ensure that the issuing Bank will send to the Buyer the original Performance Bond through Vietcombank Vung Tau Branch.

The content of the Performance Bond shall be in conformity with the Appendix No.1 of this Purchase Order.

All costs relating to the Performance Bond shall be at Seller's account.

11.2 Should the Buyer not receive the valid, satisfactory Performance Bond within 30 days from the Purchase Order signing date, the Buyer has the right to cancel the Purchase Order at any time and withdraw the Bid Bond without recourse to the law court or to arbitration.

11.3 Should the validity of the Performance Bond be required to be extended (due to delay or extension of Delivery Date of Goods), Seller shall immediately instruct the Issuing Bank to make amendment to the Performance Bond and submit to the Buyer the amended Performance Bond (original) at least 07 working days before the current Performance Bond expires. Such amendment shall be advised by the Issuing Bank to Buyer through Vietcombank Vung Tau Branch.

11.4 Should the Buyer make use of Performance Bond, it will immediately send to the Seller copy of declaration to the bank.

ARTICLE 12: FORCE-MAJEURE.

12.1 Force majeure is an event occuring in an objective manner which is unforeseeable and unrecoverable despite all necessary and possible measures being taken such as war, riot, armed conflict, embargo, natural disaster (flood, storm, tornado, earthquake, tsunami), fire, epidemic/ pandemic announced by WHO/ Country, a Region/ Country blockade order imposed by the Host Government.

Văn bản này được xác thực tại https://eoffice.vietsov.com.vn với số định danh: 13443/25-HSMT-PTM/BMĐH

12.2 The party encountering a force majeure event that leads to the failure to perform their obligations under the contract due to the direct influence of the force majeure event is obliged to immediately notify the other party, including the provision of information, explanation on the direct impact of the force majeure event leading to the breach of contract performance with evidence to prove measures taken to remedy the problem and minimize the damage. Delay in notification, provision of information and explanation, if later than 14 calendar days after the force majeure event occurs, shall cause the party encountering the force majeure event to lose the right to waive responsibility later on due to force majeure.

12.3 The written certification of the Vietnam Chamber of Commerce and Industry or the competent agency in the place where the force majeure event occurred is sufficient evidence to prove the event and the time of the force majeure.

12.4 If the force majeure event lasts more than 02 months, each party has the right to terminatethis contract without having to compensate any amount of money for the other party.

12.5 The difficulties in production such as lack of materials, electricity, labor, strike are not considered force majeure and do not exempt Party B from the obligation of delivery orlate delivery; Information from newspapers, the network and other media is for reference only.

ARTICLE 13: LAW AND ARBITRATION

13.1 This Purchase Order is governed and construed in accordance with the law of Vietnam.

13.2 Any disputes or discrepancies, which may arise out from this Purchase Order, shall be settled smoothly, amicably, basing on mutual benefit and mutual understanding.

13.3 All disputes arising out of or in relation to this Purchase Order shall be finally settled by Arbitration at the Vietnam International Arbitration Center (VIAC) in accordance with its rules of arbitration. The number of arbitrators is 03.

- The number of arbitrators shall be one
- The place of the arbitration shall be Hanoi
- The applicable law shall be the law of Vietnam
- The language of arbitrator shall be Vietnamese

13.4 Decision / award of the arbitration shall be final and binding upon both parties. The losing party will bear the arbitration fees.

ARTICLE 14: OTHER CONDITIONS

14.1 Any amendment or supplement of this Purchase Order shall be valid only if they are made in writing and signed by both parties.

All transactions during the performance of the Contract are made in writing by both Parties and sent by post or by fax number to the registered address or fax number of each Party specified in the contract according to the form of Appendix 4 (A,B).

14.2 Neither party shall be entitled to transfer its rights and obligations under this Purchase Order to any third party without the prior consent in writing of the other party.

14.3 All taxes, duties, custom fees in connection with the execution of this Purchase Order levied inside S.R. Vietnam but exception of Seller’s personnel income tax shall be at Buyer’s account.

All taxes, duties, custom fees in connection with the execution of this Purchase Order levied outside S.R. Vietnam to be at Seller’s account.

14.4 This Purchase Order shall come into force from the date of Seller's reconfirmation, which should be received by the Buyer within 07 days of this Purchase Order date and the Purchase Order will be terminated upon fulfillment by both parties all their obligations as per stipulated in this Purchase Order.

14.5 This Purchase Order is made in English and consists of ….. pages, including Appendixes No. 1, 2, 3, 4 which are considered as integral parts of this Purchase Order (Appendix No. 01: Scope

Văn bản này được xác thực tại https://eoffice.vietsov.com.vn với số định danh: 13443/25-HSMT-PTM/BMĐH

of supply and Price Table, Appendix No. 02: Performance Bond, Appendix No. 03: Letter Of Credit Specimen, Appendix No. 04(A,B): Sample letter of transaction performance contract).

14.6 This Purchase Order is made in 05 originals of the same value, one of which retained by the Seller and four are retained by the Buyer.

14.7 Components of Purchase Order and legal order of precedence are as Clause 2 GCC.

We confirm that all of abovementioned terms and conditions of this Order are considered as terms and conditions of a Contract signed by and between two our companies.

This is an operative instrument, no mail/airmail will be followed.

Best regards,

FOR VIETSOVPETRO

Văn bản này được xác thực tại https://eoffice.vietsov.com.vn với số định danh: 13443/25-HSMT-PTM/BMĐH

Appendix No. 1 to the Purchase order No…….

SCOPE OF SUPPLY AND PRICE TABLE

1	2	3	4	5.1	5.2	6	7
No.	Description + P/N	Unit	Qty	MNF	CO	Unit Price	Extended Price (Column 4x6)
1	*Item 1*						*M1*
2	*Item 2*						*M2*
	....						...
n	*Item n*						*Mn*
Total price CFR VSP Port							*M=M1+M2+...+Mn*

LEGAL REPRESENTATIVE OF SELLER
[Full name, title, signature and stamp]

LEGAL REPRESENTATIVE OF BUYER
[Full name, title, signature and stamp]

Văn bản này được xác thực tại https://eoffice.vietsov.com.vn với số định danh: 13443/25-HSMT-PTM/BMĐH

Appendix No.2
FORM OF PERFORMANCE BOND

_____, day ___ month ___ year ____

TO: _____ *[name of the Employer]*
(Hereinafter referred to as the "Employer")

Liên quan tới Hợp đồng _____ về việc _____ (sau đây được gọi là "Hợp đồng") được ký giữa _____ (sau đây gọi là "BÊN ĐƯỢC BẢO LÃNH") và _____ (sau đây gọi là "BÊN THỤ HƯỞNG"), chúng tôi, _____ có trụ sở chính tại ____ (sau đây gọi là "BÊN BẢO LÃNH") phát hành Thư bảo lãnh không hủy ngang và vô điều kiện cho bên thụ hưởng với số tiền là _____ (Bằng chữ: _____) (sau đây gọi là "THƯ BẢO LÃNH").
*With reference to Contract No. _____ entitled _____ (hereinafter referred to as "the Contract") entered into on the _____ by and between _____, having address at _____ (hereinafter referred to as "APPLICANT") and _____, we, _____, having registered office at _____ (hereinafter referred to as "GUARANTOR") hereby open in the favor of _____ (*Hereinafter referred to as the "*BENEFICIARY") an unconditional and irrevocable bank guarantee for the amount of _____ (In words: _____) (hereinafter referred to as "GUARANTEE").*

THƯ BẢO LÃNH này có hiệu lực kể từ ngày phát hành và sẽ duy trì hiệu lực cho đến _____ sau đây gọi là "Ngày hết hiệu lực". Đối với bất cứ sự gia hạn, đổi mới hoặc chuyển nhượng Hợp đồng vượt quá thời gian được quy định trong THƯ BẢO LÃNH này, BÊN THỤ HƯỞNG sẽ không cần phải thông báo hoặc được sự đồng thuận của BÊN BẢO LÃNH. THƯ BẢO LÃNH này sẽ được gia hạn dựa trên yêu cầu bằng văn bản từ BÊN ĐƯỢC BẢO LÃNH để đảm bảo cho thời gian gia hạn, đổi mới hoặc chuyển nhượng của Hợp đồng.
*This GUARANTEE is effective from the issuance date and shall remain valid, binding and in force until _____, hereinafter referred to as "the **Expiry Date**". For any extensions, renewals, or assignments of the Contract beyond the time stated in this GUARANTEE, BENEFICIARY shall not be required to give notice to nor obtain the consent of GUARANTOR. This GUARANTEE would be extended upon written request of APPLICANT to cover the extension, renewal or assignment periods.*

BÊN BẢO LÃNH cam kết **không hủy ngang và vô điều kiện** thanh toán ngay cho BÊN THỤ HƯỞNG một khoản tiền hay những khoản tiền, theo chỉ thị của BÊN THỤ HƯỞNG, tổng không vượt quá số tiền bảo lãnh nêu trên trong vòng 05 ngày làm việc kể từ ngày nhận được văn bản yêu cầu của BÊN THỤ HƯỞNG ghi rõ BÊN ĐƯỢC BẢO LÃNH đã vi phạm nghĩa vụ theo Hợp đồng.
*GUARANTOR hereby **unconditionally and irrevocably** guarantees to promptly pay BENEFICIARY an amount or amounts, specified by BENEFICIARY, up to the amount stated above, within 05 working days upon our receipt of BENEFICIARY's written demand stating that APPLICANT has failed to fulfill its performance obligation(s) under the Contract.*

Sau Ngày hết hiệu lực, THƯ BẢO LÃNH này sẽ tự động không còn giá trị cho dù bản gốc THƯ BẢO LÃNH và các Thư sửa đổi liên quan (nếu có) có được gửi trả lại BÊN BẢO LÃNH hay không.
After the Expiry date, this GUARANTEE shall automatically become null and void, whatsoever and irrespective of whether this GUARANTEE is returned to GUARANTOR or not.

Số tiền bảo lãnh nêu trên sẽ được thanh toán ngay bởi BÊN BẢO LÃNH cho BÊN THỤ HƯỞNG cho dù có sự tranh cãi hoặc phản đối nào của BÊN ĐƯỢC BẢO LÃNH hoặc của BÊN BẢO LÃNH hoặc của bất kì bên thứ ba nào khác, và bất kể có hay không sự tranh chấp giữa BÊN ĐƯỢC BẢO LÃNH và BÊN THỤ HƯỞNG về hoặc liên quan tới Hợp đồng hoặc về bất cứ vấn đề khác và cho dù những tranh chấp này, nếu có, đã được giải quyết, dàn xếp, kiện tụng hoặc phân xử bằng bất kỳ hình thức nào.

Văn bản này được xác thực tại https://eoffice.vietsov.com.vn với số định danh: 13443/25-HSMT-PTM/BMĐH

The said guarantee amount shall be paid by GUARANTOR forthwith to BENEFICIARY notwithstanding any contestation or protest by APPLICANT or by GUARANTOR or by any third party, and irrespective of whether or not there is any dispute between APPLICANT and BENEFICIARY in respect of or relating to the Contract or in respect of any other matter and irrespective of whether or not such said dispute, if any, has been settled, resolved, litigated, or adjudicated upon otherwise howsoever.

BÊN BẢO LÃNH hoặc BÊN ĐƯỢC BẢO LÃNH sẽ không được giải trừ bất cứ nghĩa vụ nào theo THƯ BẢO LÃNH này cho dù có bất cứ sự sửa đổi, thay đổi, thanh toán sai lệch, gia hạn nào liên quan tới Hợp đồng hay bất kỳ sự trì hoãn ân hạn nào của BÊN THỤ HƯỞNG trong hoặc liên quan đến bất cứ vấn đề gì của Hợp đồng.
Neither alteration, variation, incorrect payment, extension in terms of the Contract nor any forbearance of forgiveness in or in respect of any matter or thing concerning the Contract on the part of BENEFICIARY shall in any way release GUARANTOR or APPLICANT or from any liabilities under this GUARANTEE.

Việc đòi tiền nhiều lần theo bảo lãnh này là được phép và theo đó, Số tiền bảo lãnh nêu trên sẽ tự động giảm tương ứng với số tiền mà Ngân hàng đã thực hiện thanh toán cho Bên thụ hưởng theo Thư bảo lãnh.
Multiple demands under this Guarantee are allowed. In such event, the Guarantee Amount aforementioned shall automatically be reduced by the amount of each and any payment made by us under this Guarantee.

Thư bảo lãnh được điều chỉnh và giải thích theo pháp luật Việt Nam. Bất kỳ tranh chấp nào phát sinh từ hoặc liên quan đến Thư bảo lãnh sẽ [do Tòa án nhân dân có thẩm quyền của Việt Nam giải quyết theo quy định của pháp luật] / [sẽ được giải quyết tại Trung tâm Trọng tài quốc tế Việt Nam (VIAC) bên cạnh Phòng Thương mại và Công nghiệp Việt Nam theo quy tắc tố tụng trọng tài của VIAC].
The Guarantee shall be governed by and construed in accordance with the laws of Vietnam. Any dispute arising out of or relating to this Guarantee shall be submitted to [the jurisdiction of competent People's Court of Vietnam in accordance with the governing law] / [arbitration by the Vietnam Arbitration Center international (VIAC) at the Vietnam Chamber of Commerce and Industry in accordance with its rules of arbitration].

THƯ BẢO LÃNH này được phát hành duy nhất 01 (một) bản song ngữ (tiếng Việt và tiếng Anh) và không được phép chuyển nhượng. Trường hợp có sự khác nhau về cách hiểu giữa nội dung tiếng Việt và tiếng Anh thì nội dung tiếng Việt là căn cứ pháp lý.
This GUARANTEE is issued solely in 01 (one) bilingual original (Vietnamese and English) and is not transferrable. Should there be any inconsistence between the two languages of this GUARANTEE, the Vietnamese content shall prevail and be final.

LEGAL REPRESENTATIVE OF THE BANK
[Full name, title, signature and stamp]

Văn bản này được xác thực tại https://eoffice.vietsov.com.vn với số định danh: 13443/25-HSMT-PTM/BMĐH

Appendix No. 3 to the Purchase order No.
LETTER OF CREDIT SPECIMEN

SUBJECT:

KIND OF L/C: **IRREVOCABLE UNCONFIRMED L/C, AT SIGHT.**

APPLICANT: VIETSOVPETRO

(THE BUYER) 105 Le Loi Str., Vung Tau Ward, Ho Chi Minh City, S.R. Vietnam

BENEFICIARY:

(THE SELLER)

ADVISING BANK:

AMOUNT: _____ USD

(In words: United State Dollars _____) - CFR - Vietsovpetro port, Ho Chi Minh City, S.R. Vietnam.

VALIDITY: The validity of the Letter of Credit shall cover the Delivery Date plus 21 days.

PAYMENT CONDITIONS:

Payment under this Letter of Credit shall be made for shipment and in the following installments:

I. First Installment: 90% (Ninety percent) of the shipment value shall be made upon presentation of the following documents in English language by the Seller to the Bank:

1. ***Clean on board Bill of Loading*** evidencing shipment from …. port with destination Vietsovpetro Port, Vungtau City, S.R.Vietnam, consignee: Vietsovpetro 105 Le Loi Street, Vungtau City, S.R. Vietnam, marked "Freight prepaid": 02 Surrender and 02 copies.

2. ***Detailed Packing List*** showing the content of each case or lot, gross and net weight: covering Goods as specified in Appendix No. 01 to this Purchase Order: 02 originals and 02 copies.

3. ***Signed Commercial Invoice*** issued by the Seller for the respective shipment value indicating CFR Vietsovpetro Port, Vungtau City, S.R.Vietnam, with itemized and total prices: 02 originals and 02 copies.

4. ***Certificate of Quality and Quantity*** issued by manufacturer: *as stipulated in Technical Requirements.*

5. ***Certificate of Origin*** issued by the Chamber of Commerce in Manufacturer's / Exporter's country: *as stipulated in Technical Requirements.*

6. Other Certificates *as stipulated in Technical Requirements*.

7. ***Certificates of Guarantee*** issued by the Seller for the quality of Goods for the period of … months from the date of delivery: Original.

8. ***Export License*** **or** ***Letter of the Seller*** stating that Export License is not necessary for export: 01 original and 02 copies.

9. ***Seller's cable or telex, fax*** advising the shipment details (Invoice value, Bill of Lading date) to Vietsovpetro: 01 copy.

II. Second Installment: Ten percent (10%) of shipment value shall be payable against confirmation of the Buyer to the Bank within 30 days after the date of the Certificate of quantity and condition issued by Independent Inspection Company at Buyer's warehouse.

The Letter of Credit shall be subject to the Uniform Customs and Practice for Documentary credit of International Chamber of Commerce (UCP No. 600), 2007 revision.

All the banking fees, including bank commission charges and other charges associated with the opening bank shall be on the Buyer's account.

All the banking fees, including bank commission charges and other charges associated with the advising and corresponding bank shall be on the Seller's account.

Văn bản này được xác thực tại https://eoffice.vietsov.com.vn với số định danh: 13443/25-HSMT-PTM/BMĐH

All charges in connection with the amendments of the Letter of Credit (whether occurred inside or outside S.R. Vietnam), due to Seller's/Buyer's request, shall be at the Seller's / Buyer's account.

All charges associated with any extension of the Letter of credit arising due to delay in delivery as stated in Article 3 of this Contract shall be at the Seller's account.
COVERING:

Scope of supply, specifications, Quantity and Prices are in accordance to Appendix No. 1 of Purchase Order No. _____

SHIPMENT:

Shipment to be made from _____ Port to Vietsovpetro Port, Ho Chi Minh City, S.R. Vietnam on the terms of ..... - Incoterms 2020.

Delivery Date: ……. from the date of LOI/LOA (included navigation period and transportation time). The date of arrival mention here will following the date of arrival of the Goods at Vietsovpetro port that indicated in "Arrival Notice" of Vessel Agent.

Earlier shipment is allowed

Partial shipment is allowed.

Total max. …… shipments.

Transshipment is allowed at Seller's care and account

The Delivery Date is understood as the date arrival Vietsovpetro Port, Ho Chi Minh City, S.R. Vietnam.

PACKING AND MARKING: As per Purchase Order No. __ dated _____

SPECIAL CONDITIONS:

Agreed and liquidated damages for delay of delivery:

Reference to the Tender package, Vietsovpetro evaluatate and select the Seller supplying the Goods following Groups, the delivery time is applied for Groups. If the Seller delay / fail in delivery any part in scope of supply, the liquidated damages will be applied for Groups of supply.

Shipment after above stated delivery date is allowed but not exceeds two months. For Bill of Lading dated after delivery date, Buyer's Bank is authorized to deduct the agreed and liquidated damages amount following Group have item be delay as follows:

- Delay in the first four weeks: 1.00% of breached purchase order value per week.
- Delay in each following week: 1.50% of breached purchase order value per week.

One week is to be defined as 07 days, 04 days or more than 04 days to be considered as one week, 03 days and less will not be counted.
Total agreed and liquidated damage amount does not exceed 8% of breached purchase order value.

The Letter of Credit is to be automatically cancelled within 15 days from the date of opening, if the Buyer does not receive the original Performance Bond in favour of the Buyer with the content as stated in Appendix No. 2 of this Purchase Order.

Văn bản này được xác thực tại https://eoffice.vietsov.com.vn với số định danh: 13443/25-HSMT-PTM/BMĐH

APPENDIX No. 04 (A)

CORRESPONDENCE TEMPLATE FOR CONTRACT PERFORMANCE

Day month year 20..

To: Vietsovpetro
105 Le Loi – Vung Tau Ward, Ho Chi Minh City
Fax: 84-254-3839 857

Recipient: Tran Quoc Thang – Deputy General Director

Copy: Nguyen Thi Van Anh – Manager of Commercial Department

Email: thanhnq.hq@vietsov.com.vn, linhvp.hq@vietsov.com.vn

(Write the transaction content of: Change of Goods / Services, progress, use of Quota, contents related to the contract value, payment .....)

REPRESENTATIVE OF PARTY ….
(Signature and stamp)

APPENDIX No. 04 (B)

CORRESPONDENCE FORM FOR CONTRACT PERFORMANCE

Day month year 20..

To: Vietsovpetro
105 Le Loi – Vung Tau Ward, Ho Chi Minh City
Fax: 84-254-3839 857

Recipient: Vietsovpetro Commercial Department / Vietsovpetro port & Logistics Division/ Offshore Contruction Division

Email: thanhnq.hq@vietsov.com.vn, linhvp.hq@vietsov.com.vn

(Write the transaction content of: Notification of delivery, documentation of goods, notification of commencement of service / construction, information on personnel / equipment for service / construction ...

REPRESENTATIVE OF PARTY ….
(Signature and stamp)

Văn bản này được xác thực tại https://eoffice.vietsov.com.vn với số định danh: 13443/25-HSMT-PTM/BMĐH

FOR VIETNAMESE CONTRACTOR

BIỂU MẪU HỢP ĐỒNG

ĐIỀU KIỆN CHUNG CỦA HỢP ĐỒNG (ĐKC)

1. Định nghĩa

Trong hợp đồng này, các từ ngữ dưới đây được hiểu như sau:

1.1. "Chủ đầu tư" là Liên doanh Việt – Nga Vietsovpetro được quy định tại **Hợp đồng**;

1.2. "Hợp đồng" là thỏa thuận giữa Chủ đầu tư và Nhà thầu, thể hiện bằng văn bản, được hai bên ký kết, bao gồm cả phụ lục và tài liệu kèm theo;

1.3. "Nhà thầu" là nhà thầu trúng thầu (có thể là nhà thầu độc lập hoặc liên danh) và được quy định tại **Hợp đồng**;

1.4. "Nhà thầu phụ" là nhà thầu có tên trong danh sách các nhà thầu phụ do Nhà thầu đề xuất trong HSDT và được Nhà thầu ký hợp đồng để thực hiện dịch vụ liên quan;

1.5. "Tài liệu hợp đồng" là các tài liệu được liệt kê trong Hợp đồng, bao gồm bất kỳ bản sửa đổi, bổ sung nào của Hợp đồng;

1.6. "Giá hợp đồng" là tổng số tiền ghi trong hợp đồng cho việc cung cấp hàng hoá và dịch vụ liên quan. Giá hợp đồng đã bao gồm tất cả các chi phí về thuế, phí, lệ phí (nếu có);

1.7. "Ngày" là ngày dương lịch; "năm" là 365 ngày;

1.8. "Hàng hóa" bao gồm máy móc, thiết bị, nguyên liệu, nhiên liệu, vật liệu, vật tư, phụ tùng; hàng tiêu dùng; trang thiết bị y tế dùng cho các cơ sở y tế;

1.9. "Dịch vụ liên quan" bao gồm các dịch vụ như lắp đặt, duy tu, bảo dưỡng, sửa chữa ban đầu, bảo hiểm lắp đặt, bảo hiểm sửa chữa hoặc cung cấp các dịch vụ sau bán hàng khác như đào tạo, chuyển giao công nghệ…;

1.10. "Hoàn thành" là việc Nhà thầu hoàn tất các dịch vụ liên quan theo các điều khoản và điều kiện quy định tại Hợp đồng;

1.11. "Địa điểm dự án" là địa điểm được quy định tại **Hợp đồng**.

2. Tài liệu hợp đồng và thứ tự ưu tiên

2.1. Tất cả các tài liệu nêu tại Mục 2.2 ĐKC (bao gồm cả các phần của tài liệu) sẽ cấu thành Hợp đồng để tạo thành thể thống nhất, có tính tương hỗ, bổ sung và giải thích cho nhau.

2.2. Hợp đồng, các tài liệu và thứ tự ưu tiên pháp lý như sau:

a) Hợp đồng (kèm theo các Phụ lục hợp đồng);

b) Biên bản thương thảo, hoàn thiện hợp đồng;

c) Báo cáo phê duyệt kết quả lựa chọn nhà thầu;

d) Điều kiện chung của hợp đồng;

e) Hồ sơ dự thầu của Nhà thầu trúng thầu;

f) Hồ sơ mời thầu và các tài liệu sửa đổi hồ sơ mời thầu.

3. Luật và ngôn ngữ

Luật điều chỉnh hợp đồng là luật Việt Nam, ngôn ngữ của hợp đồng là tiếng Việt.

4. Thông báo

Văn bản này được xác thực tại https://eoffice.vietsov.com.vn với số định danh: 13443/25-HSMT-PTM/BMĐH

4.1. Bất cứ thông báo nào của một bên gửi cho bên kia liên quan đến hợp đồng phải được thể hiện bằng văn bản, theo địa chỉ quy định tại **Hợp đồng**. Thuật ngữ "bằng văn bản" có nghĩa là hình thức truyền đạt thông tin dưới dạng viết và có bằng chứng về việc tiếp nhận thông tin.

4.2. Thông báo của một bên sẽ được coi là có hiệu lực kể từ ngày bên kia nhận được hoặc theo ngày hiệu lực nêu trong thông báo, tùy theo ngày nào đến muộn hơn.

5. Bảo đảm thực hiện hợp đồng

5.1. Bảo đảm thực hiện hợp đồng phải được nộp lên Chủ đầu tư không muộn hơn ngày quy định tại Thư chấp thuận HSDT và trao hợp đồng. Bảo đảm thực hiện hợp đồng được thực hiện bằng một trong các hình thức sau:

a) Nộp thư bảo lãnh của tổ chức tín dụng trong nước, chi nhánh ngân hàng nước ngoài được thành lập theo pháp luật Việt Nam;

b) Nộp giấy chứng nhận bảo hiểm bảo lãnh của doanh nghiệp bảo hiểm phi nhân thọ trong nước, chi nhánh doanh nghiệp bảo hiểm phi nhân thọ nước ngoài được thành lập theo pháp luật Việt Nam.

Bảo đảm thực hiện hợp đồng theo quy định tại điểm a và điểm b khoản này là bảo đảm không có điều kiện (trả tiền khi có yêu cầu), theo mẫu quy định tại Phần 4 hoặc một mẫu khác được Chủ đầu tư chấp thuận.

c) Hình thức khác được Chủ đầu tư chấp thuận quy định tại **Hợp đồng.**

5.2. Bảo đảm thực hiện hợp đồng có giá trị và hiệu lực quy định tại **Hợp đồng**.

5.3. Bảo đảm thực hiện hợp đồng sẽ được trả cho Chủ đầu tư để bồi thường cho bất kỳ tổn thất nào phát sinh do Nhà thầu không hoàn thành các nghĩa vụ hợp đồng.

5.4. Thời hạn hoàn trả bảo đảm thực hiện hợp đồng theo quy định tại **Hợp đồng**.

6. Ký hợp đồng thầu phụ

6.1. Nhà thầu được ký kết hợp đồng với các nhà thầu phụ trong danh sách các nhà thầu phụ quy định tại **Hợp đồng** để thực hiện dịch vụ liên quan nêu trong HSDT. Việc sử dụng nhà thầu phụ sẽ không làm thay đổi các nghĩa vụ của nhà thầu. Nhà thầu phải chịu trách nhiệm trước Chủ đầu tư về khối lượng, chất lượng, tiến độ và các nghĩa vụ khác đối với phần việc do nhà thầu phụ thực hiện.

Việc thay thế, bổ sung nhà thầu phụ trong danh sách các nhà thầu phụ nêu trong HSDT hoặc thay đổi nội dung thầu phụ nêu trong HSDT chỉ được thực hiện khi được chủ đầu tư chấp thuận; việc sử dụng nhà thầu phụ phải phù hợp với nhu cầu của nhà thầu trong thực hiện hợp đồng, nhà thầu phụ phải đáp ứng về năng lực, kinh nghiệm theo yêu cầu của nhà thầu.

6.2. Nhà thầu có trách nhiệm thanh toán đầy đủ và đúng hạn cho nhà thầu phụ theo các điều khoản thỏa thuận giữa Nhà thầu và nhà thầu phụ.

7. Giải quyết tranh chấp

7.1. Chủ đầu tư và Nhà thầu có trách nhiệm giải quyết các tranh chấp phát sinh giữa hai bên thông qua thương lượng, hòa giải.

7.2. Nếu tranh chấp không thể giải quyết được bằng thương lượng, hòa giải trong thời gian quy định tại **Hợp đồng** kể từ ngày phát sinh tranh chấp thì bất kỳ bên nào cũng đều có thể yêu cầu đưa việc tranh chấp ra giải quyết theo cơ chế được quy định tại Hợp đồng.

8. Phạm vi cung cấp

Hàng hóa và dịch vụ liên quan phải được cung cấp theo quy định tại **Hợp đồng.**

9. Tiến độ giao hàng, lịch hoàn thành các dịch vụ liên quan (nếu có) và tài liệu chứng từ

Văn bản này được xác thực tại https://eoffice.vietsov.com.vn với số định danh: 13443/25-HSMT-PTM/BMĐH

Tiến độ giao hàng và lịch hoàn thành các dịch vụ liên quan (nếu có) phải được thực hiện theo theo quy định tại **Hợp đồng**. Nhà thầu phải cung cấp các hoá đơn, chứng từ tài liệu khác theo quy định tại **Hợp đồng**.

10. Trách nhiệm của Nhà thầu

Nhà thầu phải cung cấp toàn bộ hàng hóa và dịch vụ liên quan (nếu có) trong phạm vi cung cấp quy định tại Mục 8 ĐKC và theo tiến độ giao hàng, lịch hoàn thành các dịch vụ liên quan quy định tại Mục 9 ĐKC.

11. Loại hợp đồng và giá hợp đồng

11.1. Loại hợp đồng: theo quy định tại **Hợp đồng**.

11.2. Giá hợp đồng quy định tại **Hợp đồng** là toàn bộ chi phí để hoàn thành việc cung cấp hàng hoá và dịch vụ liên quan của gói thầu nêu trong Bảng giá hợp đồng trên cơ sở bảo đảm tiến độ, chất lượng theo đúng yêu cầu của gói thầu.

12. Thuế, phí, lệ phí

12.1. Nhà thầu chịu trách nhiệm đối với toàn bộ chi phí về thuế, phí, lệ phí phát sinh cho đến khi hàng hóa được giao cho Chủ đầu tư.

12.2. Trường hợp Nhà thầu thuộc đối tượng được miễn, giảm thuế, phí, lệ phí, Chủ đầu tư tạo điều kiện tối đa cho Nhà thầu áp dụng các chính sách miễn, giảm thuế, phí, lệ phí và được quy định tại **Hợp đồng**.

12.3. Việc điều chỉnh thuế thực hiện theo quy định tại **Hợp đồng**.

13. Tạm ứng

13.1. Chủ đầu tư phải cấp cho Nhà thầu khoản tiền tạm ứng theo quy định tại **Hợp đồng**, sau khi Nhà thầu nộp Bảo lãnh tạm ứng tương đương với khoản tiền tạm ứng. Bảo lãnh tạm ứng phải được phát hành bởi một tổ chức tín dụng hoặc chi nhánh ngân hàng nước ngoài được thành lập theo pháp luật Việt Nam.

13.2. Nhà thầu chỉ được sử dụng tiền tạm ứng cho việc thực hiện Hợp đồng. Nhà thầu phải chứng minh rằng khoản tiền tạm ứng đã được sử dụng đúng mục đích, đúng đối tượng bằng cách nộp bản sao các hóa đơn chứng từ hoặc tài liệu liên quan cho Chủ đầu tư.

14. Thanh toán

14.1. Yêu cầu thanh toán của Nhà thầu phải được gửi cho Chủ đầu tư bằng văn bản, kèm theo hóa đơn mô tả hàng hóa đã bàn giao và các dịch vụ liên quan đã thực hiện, cùng với chứng từ nộp theo quy định tại Điều 9 ĐKC và gửi yêu cầu thanh toán khi đã hoàn thành các nghĩa vụ khác quy định trong hợp đồng.

14.2. Việc thanh toán thực hiện theo quy định tại **Hợp đồng**.

14.3. Đồng tiền thanh toán là VND.

15. Quyền tác giả

Quyền tác giả đối với tất cả các bản vẽ, tài liệu và hồ sơ chứa đựng thông tin và dữ liệu mà Nhà thầu đã nộp cho Chủ đầu tư vẫn thuộc về Nhà thầu. Trường hợp các bản vẽ, tài liệu và hồ sơ đó được cung cấp cho Chủ đầu tư một cách trực tiếp hoặc thông qua Nhà thầu bởi một bên thứ ba thì quyền tác giả đối với các bản vẽ, tài liệu và hồ sơ thuộc về bên thứ ba đó.

16. Sử dụng các tài liệu và thông tin liên quan đến hợp đồng

16.1. Chủ đầu tư và Nhà thầu phải bảo mật bất kỳ tài liệu, dữ liệu hoặc thông tin nào khác liên quan đến hợp đồng do một bên cung cấp trực tiếp hoặc gián tiếp cho bên kia, không được tiết lộ tài liệu, dữ

Văn bản này được xác thực tại https://eoffice.vietsov.com.vn với số định danh: 13443/25-HSMT-PTM/BMĐH

liệu hoặc thông tin đó cho bên thứ ba nếu không có văn bản đồng ý của bên kia cho dù tài liệu, dữ liệu hoặc thông tin đó được cung cấp trước, trong hoặc sau khi hoàn thành hoặc chấm dứt hợp đồng. Nhà thầu có thể chuyển cho nhà thầu phụ các tài liệu, dữ liệu và thông tin phù hợp do Chủ đầu tư cung cấp để nhà thầu phụ thực hiện công việc của mình theo hợp đồng; trong trường hợp này, nhà thầu phụ phải có cam kết với Nhà thầu về việc bảo mật các tài liệu, dữ liệu hoặc thông tin đó.

16.2. Chủ đầu tư không được sử dụng các tài liệu, dữ liệu và thông tin khác nhận được từ Nhà thầu cho bất kỳ mục đích nào khác không liên quan đến hợp đồng. Nhà thầu không được sử dụng các tài liệu, dữ liệu và thông tin khác nhận được từ Chủ đầu tư cho bất kỳ mục đích nào khác không liên quan đến việc thực hiện hợp đồng.

16.3. Nghĩa vụ của Chủ đầu tư và Nhà thầu quy định tại Mục 16.1 và Mục 16.2 ĐKC không áp dụng đối với các thông tin sau đây:

a) Thông tin mà Chủ đầu tư hoặc Nhà thầu cần cung cấp cho cấp có thẩm quyền;

b) Thông tin đã hoặc sẽ được công bố mà không phải do lỗi của Chủ đầu tư hoặc Nhà thầu;

c) Thông tin thuộc sở hữu của một bên vào thời điểm công bố và trước đó không phải do bên kia cung cấp trực tiếp hoặc gián tiếp;

d) Thông tin mà một bên nhận được một cách hợp pháp từ một bên thứ ba không có nghĩa vụ bảo mật thông tin.

16.4. Các quy định tại Mục 16 ĐKC không làm thay đổi bất kỳ cam kết bảo mật nào do một bên đưa ra trước ngày ký hợp đồng liên quan đến việc cung cấp hàng hóa, dịch vụ.

16.5. Các quy định tại Mục 16 ĐKC tiếp tục có hiệu lực sau khi hoàn thành hoặc chấm dứt hợp đồng vì bất cứ lý do gì.

17. <u>Thông số kỹ thuật và tiêu chuẩn</u>

Hàng hóa và các dịch vụ liên quan được cung cấp theo hợp đồng sẽ phải tuân theo các thông số kỹ thuật và tiêu chuẩn quy định tại Chương V; nếu tại Chương V không quy định đến một thông số hay tiêu chuẩn nào có thể áp dụng thì phải tuân thủ theo thông số và tiêu chuẩn tương đương hoặc cao hơn tiêu chuẩn hiện hành tại quốc gia hoặc vùng lãnh thổ mà hàng hóa có xuất xứ.

18. <u>Đóng gói hàng hoá</u>

18.1. Nhà thầu phải đóng gói hàng hóa đúng yêu cầu nhằm tránh hư hỏng trong quá trình vận chuyển đến địa điểm dự án theo quy định trong hợp đồng. Trong quá trình vận chuyển, bao gói hàng hóa phải đủ chắc chắn để chịu được những va chạm mạnh, nhiệt độ quá cao hoặc quá thấp, trong nước mặn, nước mưa và ở ngoài trời. Kích thước và trọng lượng của mỗi kiện hàng phải tính đến điều kiện vận chuyển như khoảng cách, phương tiện vận chuyển, điều kiện cơ sở hạ tầng... từ nơi xuất hàng đến địa điểm dự án.

18.2. Việc đóng gói, ghi chú đối với hàng hóa, các giấy tờ bên trong và bên ngoài kiện hàng phải tuân thủ các yêu cầu cụ thể trong hợp đồng, bao gồm cả các yêu cầu (nếu có) quy định ở **Hợp đồng** và các chỉ dẫn khác của Chủ đầu tư.

19. <u>Bảo hiểm</u>

Trừ trường hợp có quy định khác tại **Hợp đồng**, hàng hóa cung cấp theo hợp đồng phải được bảo hiểm đầy đủ cho các tổn thất, hư hại có thể xảy ra trong quá trình sản xuất hoặc tiếp nhận, vận chuyển, lưu kho và giao hàng theo quy định tại **Hợp đồng**.

20. <u>Vận chuyển và các dịch vụ phát sinh</u>

20.1. Yêu cầu về vận chuyển hàng hóa và các yêu cầu khác quy định tại **Hợp đồng**.

Văn bản này được xác thực tại https://eoffice.vietsov.com.vn với số định danh: 13443/25-HSMT-PTM/BMĐH

20.2. Chủ đầu tư có thể yêu cầu Nhà thầu cung cấp một hoặc một số dịch vụ sau đây, bao gồm cả các dịch vụ (nếu có) theo quy định tại **Hợp đồng**:

a) Thực hiện việc lắp đặt hoặc giám sát việc lắp đặt tại hiện trường, chạy thử hàng hóa;
b) Cung cấp các dụng cụ cần thiết để lắp ráp, bảo dưỡng hàng hóa;
c) Cung cấp tài liệu chi tiết hướng dẫn vận hành và bảo dưỡng cho từng loại hàng hóa;
d) Vận hành hoặc giám sát hoặc bảo dưỡng, sửa chữa hàng hóa trong khoảng thời gian đã được các bên thỏa thuận, với điều kiện là dịch vụ này sẽ không miễn trừ cho Nhà thầu khỏi bất kỳ nghĩa vụ bảo hành nào theo hợp đồng này;

đ) Hướng dẫn nhân sự của Chủ đầu tư về cách lắp đặt, chạy thử, vận hành, bảo dưỡng, sửa chữa hàng hóa.

20.3. Trường hợp phát sinh dịch vụ ngoài hợp đồng, Chủ đầu tư và Nhà thầu thương thảo về chi phí thực hiện dịch vụ, bảo đảm không vượt quá mức giá mà Nhà thầu áp dụng cho dịch vụ tương tự trong các hợp đồng khác.

21. Kiểm tra và thử nghiệm hàng hóa

Nhà thầu phải tiến hành tất cả các thử nghiệm, kiểm tra đối với hàng hóa và dịch vụ liên quan theo quy định tại **Hợp đồng** và chịu toàn bộ chi phí thử nghiệm, kiểm tra theo quy định của Hợp đồng.

22. Phạt và bồi thường thiệt hại

Phạt vi phạm hợp đồng và bồi thường thiệt hại theo quy định tại **Hợp đồng**.

23. Bảo hành

23.1. Nhà thầu bảo đảm cung cấp hàng hóa mới, chưa qua sử dụng theo đúng đề xuất đã nêu.

23.2. Nhà thầu bảo đảm hàng hóa không phát sinh khiếm khuyết do bất kỳ hành động hay sơ suất nào từ phía Nhà thầu hoặc do thiết kế, vật liệu hoặc kỹ thuật chế tạo khi hàng hóa được sử dụng bình thường trong các điều kiện phổ biến tại Việt Nam.

23.3. Thời hạn bảo hành và địa điểm áp dụng bảo hành quy định tại **Hợp đồng**.

23.4. Trường hợp phát hiện khiếm khuyết của hàng hóa, Chủ đầu tư kịp thời thông báo cho Nhà thầu, kèm theo tài liệu chứng minh. Chủ đầu tư tạo điều kiện cho Nhà thầu tiến hành kiểm tra các khiếm khuyết đó.

23.5. Sau khi nhận được thông báo của Chủ đầu tư về việc hàng hóa có khiếm khuyết, Nhà thầu phải kịp thời sửa chữa hoặc thay thế hàng hóa có khiếm khuyết trong thời hạn quy định tại **Hợp đồng** và chịu toàn bộ chi phí sửa chữa, thay thế.

23.6. Trường hợp đã được thông báo nhưng Nhà thầu không tiến hành sửa chữa khiếm khuyết của hàng hóa trong thời hạn quy định tại **Hợp đồng**, Chủ đầu tư có thể tự sửa chữa (nếu cần thiết). Nhà thầu phải chịu tất cả rủi ro và chi phí liên quan. Việc Chủ đầu tư tự sửa chữa khiếm khuyết của hàng hóa không ảnh hưởng đến các quyền khác của Chủ đầu tư đối với Nhà thầu theo hợp đồng.

24. Bồi thường vi phạm sáng chế

24.1. Với điều kiện là Chủ đầu tư tuân thủ Mục 24.2 ĐKC, Nhà thầu có nghĩa vụ bồi thường, bảo đảm Chủ đầu tư và nhân sự của Chủ đầu tư không bị tổn hại bởi bất kỳ vụ kiện tụng, thủ tục hành chính, khiếu nại, yêu cầu, tổn thất, thiệt hại, chi phí nào, bao gồm cả chi phí thuê luật sư vì có vi phạm hoặc cáo buộc vi phạm sáng chế, mẫu hữu ích, kiểu dáng công nghiệp, nhãn hiệu, quyền tác giả hoặc các quyền sở hữu trí tuệ khác đã đăng ký hoặc tồn tại vào ngày ký hợp đồng mà các vi phạm hoặc cáo buộc vi phạm đó liên quan tới:

a) Việc lắp đặt hàng hóa do Nhà thầu thực hiện hoặc việc sử dụng hàng hóa tại Việt Nam;

Văn bản này được xác thực tại https://eoffice.vietsov.com.vn với số định danh: 13443/25-HSMT-PTM/BMĐH

b) Việc bán các sản phẩm được sản xuất từ hàng hóa.

Việc bồi thường nêu trên không áp dụng đối với các trường hợp sau: sử dụng hàng hóa hoặc bất kỳ phần nào của hàng hóa ngoài mục đích nêu trong hợp đồng hoặc phát sinh hợp lý từ hợp đồng; có hành vi vi phạm do sử dụng hàng hóa hoặc bất kỳ phần nào của hàng hóa, hay bất kỳ sản phẩm nào được sản xuất từ hàng hóa có sự kết hợp các thiết bị, nhà xưởng hoặc vật tư khác không phải do Nhà thầu cung cấp theo hợp đồng.

24.2. Trường hợp xảy ra kiện tụng hoặc khiếu nại đối với Chủ đầu tư liên quan tới các vấn đề quy định tại Mục 24.1 ĐKC, Chủ đầu tư có nghĩa vụ thông báo kịp thời cho Nhà thầu. Nhà thầu có thể nhân danh Chủ đầu tư giải quyết kiện tụng hoặc khiếu nại đó hoặc thương thảo để giải quyết kiện tụng hoặc khiếu nại đó và chịu trách nhiệm đối với các chi phí liên quan.

24.3. Trong vòng 28 ngày kể từ khi nhận được thông báo của Chủ đầu tư, trường hợp Nhà thầu không thông báo cho Chủ đầu tư về ý định giải quyết kiện tụng hay khiếu nại đó, Chủ đầu tư sẽ tự giải quyết.

24.4. Trường hợp được yêu cầu, Chủ đầu tư hỗ trợ Nhà thầu giải quyết vụ kiện tụng hay khiếu nại đó và sẽ được Nhà thầu hoàn trả mọi chi phí hợp lý phát sinh.

24.5. Chủ đầu tư có nghĩa vụ bồi thường, đảm bảo Nhà thầu, nhà thầu phụ, nhân sự của Nhà thầu không bị tổn hại bởi bất kỳ vụ kiện tụng, thủ tục hành chính, khiếu nại, yêu cầu, tổn thất, thiệt hại, chi phí nào, bao gồm cả chi phí thuê luật sư vì có vi phạm hoặc cáo buộc vi phạm sáng chế, mẫu hữu ích, kiểu dáng công nghiệp, nhãn hiệu, quyền tác giả hoặc các quyền sở hữu trí tuệ khác đã đăng ký hoặc tồn tại vào ngày ký hợp đồng mà các vi phạm hoặc cáo buộc vi phạm đó phát sinh từ hoặc liên quan đến bất kỳ thiết kế, dữ liệu, bản vẽ, thông số kỹ thuật hoặc các tài liệu và hồ sơ nào được cung cấp hoặc thiết kế bởi Chủ đầu tư hoặc thay mặt Chủ đầu tư.

25. <u>Thay đổi liên quan đến pháp lý</u>

Trừ trường hợp có quy định khác tại hợp đồng, kể từ 28 ngày trước ngày có thời điểm đóng thầu trở về sau, nếu có bất kỳ chính sách nào được ban hành, thay thế, sửa đổi hoặc tuyên bố hết hiệu lực tại Việt Nam gây ảnh hưởng đến ngày giao hàng và/hoặc giá hợp đồng thì ngày giao hàng hoặc giá hợp đồng phải được điều chỉnh tương ứng với mức độ ảnh hưởng của nhà thầu khi thực hiện các nghĩa vụ theo hợp đồng. Phần tăng hoặc giảm giá hợp đồng không được thanh toán riêng hay ghi nhận khoản phải trả riêng nếu việc tăng hoặc giảm giá hợp đồng này đã được quy định tại Mục 11 ĐKC.

26. <u>Bất khả kháng</u>

26.1. Nhà thầu không bị tịch thu bảo lãnh thực hiện hợp đồng, không phải chịu trách nhiệm bồi thường thiệt hại hay bị phạt hoặc bị chấm dứt hợp đồng nếu rơi vào các sự kiện bất khả kháng gây cản trở tiến độ thực hiện hợp đồng hoặc không thể thực hiện nghĩa vụ hợp đồng.

26.2. Khi xảy ra sự việc bất khả kháng, việc một bên không thực hiện được bất kỳ một nghĩa vụ nào của mình sẽ không bị coi là vi phạm hay phá vỡ Hợp đồng, với điều kiện nhà thầu bị ảnh hưởng bởi vụ việc này: (a) đã tiến hành những biện pháp ngăn ngừa hợp lý, cẩn trọng và các biện pháp thay thế cần thiết, tất cả với mục đích thực hiện được những điều khoản và điều kiện của Hợp đồng này, và (b) phải tiếp tục thực hiện các nghĩa vụ của mình trong phạm vi Hợp đồng chừng nào việc thực hiện này còn hợp lý và thực tế.

26.3. Trong hợp đồng này, bất khả kháng được hiểu là các sự kiện nằm ngoài tầm kiểm soát của các bên và không thể lường trước, không thể tránh được và khiến cho việc thực hiện hợp đồng là không khả thi mà nguyên nhân không phải do sơ suất hoặc thiếu chú ý của các bên. Sự kiện bất khả kháng có thể bao gồm nhưng không giới hạn bởi chiến tranh, bạo loạn, đình công, hỏa hoạn, lũ lụt, dịch bệnh, cách ly do kiểm dịch hoặc các chính sách, quy định của Nhà nước.

26.4. Khi xảy ra sự kiện bất khả kháng, nhà thầu bị ảnh hưởng bởi sự kiện bất khả kháng phải kịp thời thông báo bằng văn bản cho bên kia về sự kiện đó và nguyên nhân gây ra sự kiện trong vòng 14 ngày

Văn bản này được xác thực tại https://eoffice.vietsov.com.vn với số định danh: 13443/25-HSMT-PTM/BMĐH

kể từ ngày xảy ra sự kiện bất khả kháng. Đồng thời, chuyển cho bên kia giấy xác nhận về sự kiện bất khả kháng đó được cấp bởi một tổ chức có thẩm quyền tại nơi xảy ra sự kiện bất khả kháng.

Nhà thầu bị ảnh hưởng bởi sự kiện bất khả kháng phải tiếp tục thực hiện các nghĩa vụ hợp đồng theo hoàn cảnh thực tế cho phép và phải tìm mọi biện pháp hợp lý để hạn chế hậu quả của sự việc bất khả kháng.

26.5. Thời hạn mà một bên phải hoàn thành một công việc theo Hợp đồng này được gia hạn thêm một khoảng thời gian bằng đúng thời gian bên đó không thể thực hiện được công việc do sự kiện bất khả kháng gây ra.

27. <u>Sửa đổi hợp đồng</u>

27.1. Chủ đầu tư có thể yêu cầu Nhà thầu sửa đổi, bổ sung các nội dung sau đây trong phạm vi công việc của hợp đồng:
a) Thay đổi bản vẽ, thiết kế công nghệ hoặc yêu cầu kỹ thuật đối với trường hợp hàng hóa cung cấp theo hợp đồng được đặt hàng sản xuất cho riêng Chủ đầu tư;
b) Thay đổi phương thức vận chuyển hoặc đóng gói;
c) Thay đổi địa điểm giao hàng;
d) Thay đổi dịch vụ liên quan.

đ) Điều chỉnh tiến độ thực hiện hợp đồng theo quy định tại Mục 28 ĐKC.

27.2. Trường hợp việc sửa đổi, bổ sung các nội dung trong phạm vi công việc của hợp đồng quy định tại Mục 27.1 ĐKC làm thay đổi chi phí hoặc thời gian thực hiện bất kỳ điều khoản nào trong hợp đồng, giá hợp đồng hoặc ngày giao hàng, ngày hoàn thành dịch vụ liên quan phải được điều chỉnh tương ứng và hai bên tiến hành sửa đổi hợp đồng. Yêu cầu của Nhà thầu về việc điều chỉnh giá hợp đồng, ngày giao hàng hoặc ngày hoàn thành phải được tiến hành trong vòng 28 ngày, kể từ ngày Nhà thầu nhận được yêu cầu của Chủ đầu tư về việc sửa đổi, bổ sung nội dung công việc của hợp đồng.

27.3. Trường hợp Nhà thầu cung cấp hàng hóa với phiên bản mới của cùng hãng sản xuất, có cùng xuất xứ, có tính năng kỹ thuật, cấu hình, thông số… tương đương hoặc tốt hơn phiên bản hàng hóa Nhà thầu đề xuất trong HSDT và đáp ứng yêu cầu HSMT thì Nhà thầu phải thông báo trước bằng văn bản cho Chủ đầu tư để Chủ đầu tư xem xét. Trong trường hợp này, căn cứ nhu cầu sử dụng, Chủ đầu tư có thể chấp thuận đề xuất của Nhà thầu với điều kiện là đơn giá và các điều kiện khác của hợp đồng không thay đổi.

27.4. Trường hợp cần thực hiện các dịch vụ liên quan chưa nêu trong hợp đồng, Chủ đầu tư và Nhà thầu tiến hành thương thảo, bảo đảm đơn giá phù hợp giá cả thị trường.

27.5. Chủ đầu tư và Nhà thầu sẽ tiến hành thương thảo để làm cơ sở ký kết văn bản sửa đổi hợp đồng trong trường hợp sửa đổi hợp đồng. Mọi giao dịch trong quá trình thực hiện hợp đồng được các Bên thực hiện bằng văn bản và gửi theo đường bưu chính hoặc theo số Fax tới địa chỉ đăng ký hoặc số Fax của mỗi Bên ghi trong hợp đồng và email đến địa chỉ email theo mẫu quy định tại **Hợp đồng**.

27.6. Trong thời gian thực hiện hợp đồng, nhà thầu có thể đề xuất giải pháp tiết kiệm chi phí bao gồm ít nhất các nội dung sau đây:
a) Nội dung giải pháp, giải thích sự khác biệt so với các yêu cầu theo hợp đồng đã ký kết;
b) Phân tích toàn diện chi phí và lợi ích của giải pháp bao gồm mô tả và ước tính các chi phí (bao gồm cả chi phí vòng đời) có thể phát sinh cho Chủ đầu tư trong trường hợp chấp thuận đề xuất của Nhà thầu;

c) Tác động của giải pháp đối với hiệu quả thực hiện hợp đồng.

27.7. Chủ đầu tư có thể chấp thuận đề xuất của Nhà thầu nếu đề xuất này chứng minh được một trong các lợi ích dưới đây mà không làm ảnh hưởng đến các chức năng cần thiết của hàng hóa:
a) Rút ngắn thời gian giao hàng;
b) Giảm giá hợp đồng hoặc chi phí vòng đời cho Chủ đầu tư;
c) Nâng cao chất lượng, hiệu quả hoặc tính bền vững của hàng hóa trong hợp đồng;

Văn bản này được xác thực tại https://eoffice.vietsov.com.vn với số định danh: 13443/25-HSMT-PTM/BMĐH

d) Bất kỳ lợi ích nào khác cho Chủ đầu tư.

Trường hợp đề xuất của Nhà thầu được Chủ đầu tư chấp thuận và làm giảm giá hợp đồng, Chủ đầu tư thanh toán cho Nhà thầu theo tỷ lệ quy định tại **Hợp đồng** đối với phần giá trị giảm giá hợp đồng.

Trường hợp đề xuất của Nhà thầu được Chủ đầu tư chấp thuận và làm tăng giá hợp đồng nhưng giảm chi phí vòng đời do tác động của các yếu tố quy định tại các điểm a, b, c và d khoản này, Chủ đầu tư thanh toán cho Nhà thầu theo phần giá trị tăng giá hợp đồng.

28. Điều chỉnh tiến độ thực hiện hợp đồng

28.1. Trong quá trình thực hiện hợp đồng, trường hợp phát sinh các điều kiện bất lợi, cản trở Nhà thầu hoặc nhà thầu phụ trong việc cung cấp hàng hóa và lịch thực hiện các dịch vụ liên quan quy định tại Mục 9 ĐKC, Nhà thầu phải kịp thời thông báo bằng văn bản cho Chủ đầu tư về việc chậm tiến độ, nguyên nhân, khoảng thời gian chậm tiến độ. Trên cơ sở thông báo của Nhà thầu, Chủ đầu tư phải nhanh chóng đánh giá tình hình và có thể xem xét gia hạn hợp đồng. Trường hợp Chủ đầu tư đồng ý gia hạn, các bên tiến hành thương thảo để làm cơ sở ký kết phụ lục sửa đổi, bổ sung hợp đồng.

28.2. Trừ trường hợp bất khả kháng quy định tại Mục 26 ĐKC, Nhà thầu giao hàng chậm hoặc hoàn thành dịch vụ liên quan chậm có nghĩa vụ bồi thường thiệt hại cho Chủ đầu tư theo quy định tại Mục 22 ĐKC.

29. Chấm dứt hợp đồng

29.1. Chấm dứt hợp đồng do sai phạm

a) Chủ đầu tư có thể chấm dứt một phần hoặc toàn bộ hợp đồng mà không gây tổn hại đến các biện pháp khắc phục vi phạm hợp đồng khác bằng cách thông báo bằng văn bản cho Nhà thầu về sai phạm trong hợp đồng trong các trường hợp sau:
(i) Nhà thầu không thể bàn giao hàng hóa hoặc một phần hàng hóa trong thời hạn quy định theo hợp đồng, hoặc trong thời gian gia hạn theo quy định tại Mục 28 ĐKC;
(ii) Nhà thầu không thực hiện bất kỳ nghĩa vụ nào khác theo hợp đồng;
(iii) Chủ đầu tư xác định Nhà thầu vi phạm một trong các hành vi bị cấm quy định tại HSMT trong quá trình đấu thầu hoặc thực hiện hợp đồng;

b) Trường hợp Chủ đầu tư chấm dứt một phần hoặc toàn bộ hợp đồng theo điểm a khoản này, Chủ đầu tư có thể mua sắm hàng hóa và dịch vụ liên quan tương tự như các hàng hóa và dịch vụ chưa được thực hiện theo các điều khoản và phương thức phù hợp. Nhà thầu phải chịu trách nhiệm bồi thường cho Chủ đầu tư các chi phí phụ trội phát sinh từ việc mua hàng hóa và dịch vụ tương tự đó. Tuy nhiên, Nhà thầu vẫn phải tiếp tục thực hiện phần hợp đồng không bị chấm dứt.

29.2. Chấm dứt hợp đồng do mất khả năng thanh toán

Trường hợp Nhà thầu phá sản hoặc mất khả năng thanh toán, Chủ đầu tư có thể chấm dứt hợp đồng vào bất kỳ thời điểm nào bằng cách gửi thông báo cho Nhà thầu. Trong trường hợp đó, hợp đồng sẽ chấm dứt và Nhà thầu không được bồi thường với điều kiện là việc chấm dứt hợp đồng không gây tổn hại hoặc ảnh hưởng đến bất kỳ quyền khởi kiện hoặc biện pháp khắc phục của Chủ đầu tư trước đó hoặc sau đó.

30. Hạn chế xuất khẩu

Trường hợp quốc gia, vùng lãnh thổ cung cấp hàng hóa, dịch vụ có các quy định thương mại dẫn tới việc hạn chế xuất khẩu, gây khó khăn cho Nhà thầu trong việc thực hiện các nghĩa vụ hợp đồng, Nhà thầu không bắt buộc phải hoàn thành nghĩa vụ giao hàng, thực hiện dịch vụ với điều kiện là Nhà thầu cung cấp cho Chủ đầu tư các tài liệu chứng minh việc đã hoàn thành tất cả các thủ tục xuất khẩu cần thiết, bao gồm cả xin giấy phép hoặc ủy quyền để xuất khẩu hàng hóa, dịch vụ theo hợp đồng. Trong trường hợp này, Chủ đầu tư có thể chấm dứt hợp đồng với Nhà thầu.

Văn bản này được xác thực tại https://eoffice.vietsov.com.vn với số định danh: 13443/25-HSMT-PTM/BMĐH

CỘNG HÒA XÃ HỘI CHỦ NGHĨA VIỆT NAM
Độc lập - Tự do - Hạnh phúc

***

HỢP ĐỒNG SỐ: .....
V/v: Cung cấp ....., Lô ... (Gói thầu ...)

Căn cứ vào nhu cầu của Liên doanh Việt – Nga Vietsovpetro và khả năng cung cấp của Công ty...,
Hôm nay, ngày _____ tháng____ năm 2024, các bên gồm

BÊN MUA: LIÊN DOANH VIỆT - NGA VIETSOVPETRO – Gọi tắt là Bên A

Địa chỉ	:	105 Lê Lợi, Phường Vũng Tàu, TP.HCM
Điện thoại	:	0254 3839 871/ 3839 872
Fax	:	0254 3839 857
Tài khoản số	:	**……**- tại Ngân hàng Ngoại thương VN, CN Vũng Tàu
Mã số thuế	:	**……**
Đại diện	:	**Ông ……– Tổng Giám Đốc** (hoặc theo Ủy quyền)

BÊN BÁN: CÔNG TY……– Gọi tắt là Bên B

Địa chỉ	:
Điện thoại	:
Fax	:
Tài khoản số	:
Mã số thuế	:
Đại diện	:

Hai Bên thỏa thuận ký kết hợp đồng với các điều khoản như sau:

Điều 1: Đối tượng hợp đồng

Bên A đồng ý mua và Bên B đồng ý bán **" ……..- Lô …"** (sau đây gọi tắt là "Hàng hóa") với chủng loại, số lượng, đặc điểm kỹ thuật, đơn giá, giá trị hàng hóa theo Phụ lục 1 của hợp đồng và là một phần thống nhất và không tách rời của hợp đồng này.
Hàng hóa của hợp đồng được Vietsovpetro sử dụng cho hoạt động dầu khí tại Lô ….

Điều 2: Giá trị hợp đồng

2.1. Đơn giá chi tiết: như nêu tại **Phụ lục số 01** của Hợp đồng này.

2.2. Tổng giá trị Hợp đồng là : ……VNĐ *(Bằng chữ: ……).*
Giá trị hợp đồng trên không bao gồm thuế nhập khẩu, không bao gồm thuế GTGT của giá trị hàng hóa nhập khẩu ghi trên Tờ khai Hải quan nhưng đã bao gồm các loại thuế, phí, lệ phí phát sinh trong lãnh thổ Việt Nam. Thuế nhập khẩu và thuế GTGT trên được miễn theo Hiệp định liên Chính phủ cho hàng hóa Lô 09.1. Bên B được sử dụng Hạn mức nhập khẩu Lô 09.1 của Bên A để làm thủ tục nhập khẩu hàng hóa và miễn thuế theo Hiệp định.

2.3. Giá trị hợp đồng nêu trên được tính trên cơ sở giao hàng tại kho Vietsovpetro tại thành phố HCM, bao gồm giá trị hàng hóa và các loại chi phí do Bên B chi trả như phí vận chuyển, đóng gói, bốc xếp lên phương tiện vận chuyển và các chi phí khác liên quan đến việc thực hiện hợp đồng này. Giá trị hợp đồng là giá cố định và không thay đổi trong suốt thời gian hợp đồng có hiệu lực.

Điều 3: Quy cách, số lượng, chất lượng hàng hóa

3.1 Quy cách, số lượng, chất lượng, chủng loại, ký mã hiệu, hãng sản xuất, nước sản xuất, năm sản xuất và những thông số khác của hàng hóa do Bên B cung cấp phải phù hợp với quy định nêu trong Phụ lục số 1 của Hợp đồng này. Hàng hóa mới 100%, chưa qua sử dụng và trong tình trạng sử dụng tốt, được sản xuất năm **……..**

Văn bản này được xác thực tại https://eoffice.vietsov.com.vn với số định danh: 13443/25-HSMT-PTM/BMĐH

3.2 Hồ sơ kèm theo hàng hóa gồm:

- Hóa đơn thuế GTGT (Bản gốc);
- Chứng chỉ xuất xứ (C/O) do phòng Thương mại hoặc Tổ chức có thẩm quyền của nước sản xuất hoặc nước xuất khẩu hàng cấp (Bản gốc / Bản điện tử có kèm đường link để kiểm tra);
- Chứng chỉ số lượng và chất lượng (C/Q) do nhà sản xuất cấp (Bản gốc/ Bản điện tử có kèm đường link để kiểm tra);
- Các Chứng chỉ khác (Theo YCKT của HSMT) (Bản gốc);
- Chứng chỉ bảo hành của Bên B bảo hành **……** kể từ ngày giao hàng (Bản gốc);
- Tài liệu kỹ thuật của hàng hóa (nếu có).

Hồ sơ mời thầu của Bên A và Hồ sơ dự thầu của Bên B cho gói thầu số **……..** là tài liệu tham chiếu về kỹ thuật cho hàng hóa của hợp đồng này.

<u>Điều 4</u>: Giao nhận và kiểm tra, giám định hàng hóa

4.1 Hàng hóa được giao phải phù hợp với yêu cầu quy định tại Điều 1 và Điều 3 của hợp đồng này trong thời hạn là **…….** ***ngày lịch*** tính từ ngày (LOI/LOA) (ngày/tháng/năm) / ngày ký hợp đồng đến ngày giao hàng tại kho của Bên A. Ngày giao hàng của hợp đồng này được ghi trong Biên bản giao nhận hàng do đại diện hai bên ký như quy định tại mục 4.8 dưới đây.

Định kỳ 02 tuần/lần (trước ngày 15 và 30 hàng tháng), Bên B có trách nhiệm thông báo bằng văn bản cho Bên A cập nhật tình hình đặt hàng, tiến độ sản xuất và kế hoạch giao hàng của hợp đồng. Trong quá trình thực hiện hợp đồng, nếu Bên B gặp vướng mắc liên quan đến việc giao hàng thì Bên B cần khẩn trương thông báo cho Bên A bằng văn bản để hai bên phối hợp xem xét xử lý nhằm đảm bảo việc cung cấp hàng hóa cho Bên A theo đúng chất lượng và tiến độ của hợp đồng.

4.2 Bên B tự chịu trách nhiệm làm thủ tục hải quan cho hàng hóa nhập khẩu. Bên A cho phép Bên B được sử dụng hạn mức nhập khẩu của Bên A đã đăng ký tại Hải quan Vũng Tàu để làm thủ tục nhập khẩu và hỗ trợ Bên B về mặt giấy tờ trong việc sử dụng hạn mức nhập khẩu của Bên A cho lô hàng nhập khẩu của Hợp đồng này để Bên B xin miễn thuế nhập khẩu và thuế giá trị gia tăng của giá trị hàng hóa nhập khẩu ghi trên Tờ khai Hải quan theo quy định cho Liên doanh Việt – Nga Vietsovpetro.

4.3 Để thuận tiện cho việc thông quan, làm các thủ tục miễn thuế nhập khẩu và miễn thuế giá trị gia tăng của giá trị hàng hóa nhập khẩu ghi trên Tờ khai Hải quan, hàng hóa Bên B nên nhập về cảng Vũng Tàu. Bên A không chịu trách nhiệm trả tiền thuế cho Bên B trong trường hợp nếu Bên B nhập hàng hóa về cảng khác mà không làm được thủ tục miễn thuế hoặc Bên B không sử dụng hạn mức nhập khẩu của Bên A.

4.4 Hàng hóa được giao ___ lần vào kho của Bên A tại thành phố HCM. Bên B cam kết giao hàng đúng số lần quy định. Trường hợp số lần giao hàng thực tế vượt quá số lần qui định tại Điều này, Bên A có thể đồng ý nhận hàng và Bên B phải chịu trách nhiệm thanh toán cho Bên A toàn bộ chi phí phát sinh từ việc Bên A tổ chức nhận hàng của các lần giao hàng vượt quá qui định trong Hợp đồng theo đơn giá hiện hành của Bên A đang áp dụng cho các khách hàng của Bên A.

4.5 Dỡ hàng từ phương tiện của bên B do Bên A đảm nhận bằng phương tiện, nhân lực và chi phí của mình.

4.6 Trong vòng 02 ngày trước khi giao hàng, Bên B phải thông báo bằng văn bản cho Bên A biết về số lượng, quy cách đóng gói hàng hóa để Bên A bố trí nhân lực và phương tiện bốc dỡ. Văn bản thông báo giao Hàng hoá phải được gửi cho Bên A và đơn vị được uỷ quyền nhận Hàng hoá của Bên A (Xí nghiệp Dịch vụ). Văn bản thông báo giao Hàng hoá phải nêu rõ:

- Số Hợp đồng dẫn chiếu;
- Loại Hàng hoá giao, bao gồm số lượng, khối lượng và giá trị;
- Tên phương tiện chở hàng, quốc tịch/ số hiệu;
- Thời gian dự kiến đến nơi giao hàng;

Văn bản này được xác thực tại https://eoffice.vietsov.com.vn với số định danh: 13443/25-HSMT-PTM/BMĐH

- Địa chỉ, điện thoại liên lạc, email, số fax của đơn vị vận chuyển;
- Những hướng dẫn đặc biệt cần lưu ý Bên A khi bốc dỡ…

4.7 Người của Bên B đến giao hàng phải có giấy giới thiệu của người đại diện ký Hợp đồng của Bên B.

4.8 Đại diện của Liên Doanh Việt - Nga Vietsovpetro (là Xí nghiệp Dịch vụ và Đơn vị đặt hàng) và đại diện của Bên B tham gia giao nhận, kiểm tra hàng hóa của hợp đồng này và lập Biên bản giao nhận hàng (theo Phụ lục số 2 của hợp đồng này) sẽ ghi rõ số lượng, tình trạng, các hồ sơ giao kèm theo hàng hóa. Biên bản giao nhận hàng phải được Lãnh đạo Xí nghiệp Dịch vụ và Lãnh đạo Đơn vị đặt hàng phê duyệt. Biên bản giao nhận hàng là căn cứ để Bên A thanh toán cho Bên B.

4.9 Trong trường hợp cần thiết, bằng chi phí của mình, Bên A (giao cho Xí nghiệp Dịch vụ) có quyền trưng cầu cơ quan giám định độc lập tham gia giám định hàng hóa. Trong vòng 3 ngày làm việc kể từ khi kết thúc giám định, cơ quan giám định độc lập cung cấp Chứng thư giám định tình trạng và số lượng hàng hóa. Chứng thư giám định hàng hóa là căn cứ pháp lý để Bên A khiếu nại Bên B.

4.10 Bên B phải đảm bảo khi giao Hàng hóa cho Bên A phải có kèm theo đầy đủ các chứng từ như quy định tại Điều 3 của Hợp đồng này. Trong trường hợp Bên B giao hàng tới kho của Bên A nhưng chưa có đầy đủ các chứng từ theo quy định thì Bên A đồng ý cho Bên B tạm gửi hàng tại kho để chờ tập hợp đầy đủ các chứng từ cho việc giao nhận Hàng hóa chính thức.

Bên A đồng ý miễn phí lưu kho đối với lô Hàng tạm gửi này của Bên B trong 05 ngày lịch đầu tiên. Kể từ ngày thứ 6 trở đi, Bên B sẽ phải trả cho Bên A chi phí lưu kho của lô Hàng theo mức đơn giá lưu kho hiện hành của Bên A đang áp dụng cho các khách hàng của Bên A. Chi phí lưu kho này sẽ được Bên A khấu trừ thẳng vào giá trị mà Bên A thanh toán cho Bên B theo quy định của Hợp đồng này hoặc những khoản thanh toán ở những Hợp đồng khác đã ký giữa Hai bên.

4.11 Bên A có quyền từ chối nhận Hàng nếu Hàng hoá khi giao không đảm bảo chất lượng, như đã quy định ở Điều 1, Phụ lục số 1 cũng như không có đầy đủ bộ chứng từ đi kèm như quy định tại Điều 3 của Hợp đồng này.

<u>Điều 5:</u> Bao bì, Đóng gói và Ký mã hiệu:

5.1 Hàng hoá giao theo Hợp đồng này sẽ được đóng trong bao bì thích hợp theo tiêu chuẩn xuất khẩu, bảo đảm cho hàng hoá không bị hư hại, ăn mòn trong quá trình vận chuyển và thuận tiện cho bốc xếp, bốc dỡ.

5.2 Bên B hoàn toàn chịu trách nhiệm trong trường hợp hàng hoá bị mất mát, hư hỏng do thiếu sót trong việc đóng gói Hàng hoá.

5.3 Hàng hoá có thể được ghi rõ ràng bằng sơn không xóa được trên bề mặt hoặc in trên tấm ghi nhãn đính trên từng kiện với các thông tin sau bằng tiếng Anh hay tiếng Việt:
- Tên nhà sản xuất.
- Tên Hàng.
- Khối lượng (nếu có).
- Số Hợp đồng (nếu có).

5.4 Bên B chịu toàn bộ phí tổn đối với mọi mất mát/ hư hại của Hàng hoá trong qúa trình bốc xếp, bốc dỡ, vận chuyển do ghi ký mã hiệu không đúng, không đầy đủ cũng như chịu mọi chi phí vận chuyển, bảo quản, mất mát phát sinh thêm do Hàng hóa bị gửi nhầm địa chỉ do ghi ký mã hiệu sai.

<u>Điều 6:</u> Trách nhiệm do vi phạm hợp đồng

6.1 Bên B phải giao hàng đầy đủ cho Bên A được quy định tại Phụ lục số 01 của hợp đồng và theo thời hạn quy định của hợp đồng. Nếu Bên B giao hàng bị chậm thì Bên B phải chịu phạt 0,2%/ngày cho 10 ngày lịch chậm đầu tiên; phạt 0,3%/ngày cho những ngày lịch tiếp theo tính trên phần giá trị của hợp đồng bị vi phạm cho đến mức tổng số tiền phạt không quá 08% phần giá trị của hợp đồng bị vi phạm.

Văn bản này được xác thực tại https://eoffice.vietsov.com.vn với số định danh: 13443/25-HSMT-PTM/BMĐH

Nếu Bên B giao hàng quy định tại Phụ lục số 01 của hợp đồng này theo nhiều lần giao hàng thì thời gian giao nhận hàng của hợp đồng được tính là thời gian giao hàng theo lần giao cuối cùng. Hàng hoá của những lần giao trước chỉ được ghi nhận lưu kho tại kho của Bên A cho đến khi Bên B giao nhận đủ số hàng của cả hợp đồng.

6.2 Nếu Bên B không giao đủ số lượng, chủng loại hàng hóa (như quy định ở Phụ lục số 1 của Hợp đồng này) thì bên B vi phạm nghĩa vụ giao hàng theo hợp đồng này và phải chịu phạt một khoản tiền bằng 08% giá trị của hợp đồng.

6.3 Nếu Bên B giao hàng hoá vượt số lần giao nhận như quy định tại Điều 4 của hợp đồng này thì:

Bên B đã vi phạm điều kiện giao nhận hàng và phải chịu trách nhiệm thanh toán các chi phí liên quan tới giao nhận hàng hoá cho lần giao hàng vượt quá số lần giao hàng theo hợp đồng này theo mức đơn giá hiện hành của Bên A đang áp dụng cho các khách hàng của Bên A.

6.4 Nếu bên B giao hàng không đảm bảo chất lượng như qui định tại Điều 2 của hợp đồng thì Bên A sẽ không nhận hàng và phạt Bên B theo mức phạt không giao đủ hàng như quy định tại mục 6.2 của hợp đồng này. Bên A có quyền chấp nhận/ không chấp nhận việc bên B sẽ cung cấp hàng mới thay thế cho hàng không đảm bảo chất lượng trên.

6.5 Vi phạm do cung cấp chậm/ cung cấp không đủ hàng hoá:

6.5.1. Nếu Bên B giao hàng chậm quá 60 ngày lịch so với thời gian quy định tại mục 4.1 của hợp đồng này, ngoại trừ trường hợp bất khả kháng, thì Bên A có quyền:
a) Chỉ định bên thứ 3 có khả năng cung cấp hàng hóa. Trong trường hợp đó Bên B có trách nhiệm ký hợp đồng với bên được chỉ định để tiếp tục thực hiện công việc cung cấp cho bên A.
Hoặc;
b) Trực tiếp ký hợp đồng mua hàng/hàng hoá kèm dịch vụ của Bên thứ 3 để tiếp tục thực hiện công việc của hợp đồng. Trong trường hợp đó Bên B phải trả khoản tiền chênh lệch và các chi phí liên quan nếu có.
Hoặc;
c) Đơn phương chấm dứt thực hiện hợp đồng và trong trường hợp này Bên B phải chịu phạt một khoản tiền bằng 08% giá trị của hợp đồng.

6.5.2. Nếu Bên B giao hàng chậm (một phần hàng hoá) quá 60 ngày lịch so với thời gian quy định tại mục 4.1 của hợp đồng này, ngoại trừ trường hợp bất khả kháng, thì Bên A có quyền:
a) Chỉ định bên thứ 3 có khả năng cung cấp hàng hóa. Trong trường hợp đó Bên B có trách nhiệm ký hợp đồng với bên được chỉ định để tiếp tục thực hiện công việc cung cấp cho bên A.
Hoặc;
b) Trực tiếp ký hợp đồng mua hàng/hàng hoá kèm dịch vụ của Bên thứ 3 để tiếp tục thực hiện công việc của hợp đồng. Trong trường hợp đó Bên B phải trả khoản tiền chênh lệch và các chi phí liên quan nếu có.
c) Đơn phương chấm dứt thực hiện tiếp hợp đồng và trong trường hợp này Bên B phải chịu phạt một khoản tiền bằng 08% giá trị của hợp đồng.

6.6 Tổng các loại phạt không vượt quá 08% giá trị hợp đồng.

6.7 Giá trị hợp đồng bị vi phạm ghi ở Điều 5 của hợp đồng này là giá trị không có thuế GTGT và không bao gồm thuế nhập khẩu.

6.8 Để thu hồi khoản tiền phạt vi phạm, Bên A sẽ toàn quyền: 1) khấu trừ khoản tiền phạt vi phạm từ các khoản tiền mà Bên A sẽ thanh toán cho Bên B tại Hợp đồng này hoặc theo các hợp đồng khác được ký kết giữa hai bên; 2) Yêu cầu Ngân hàng cấp Bảo đảm thực hiện hợp đồng thanh toán ngay khoản tiền Bên B mở bảo lãnh cho Bên A ; 3) Bằng văn bản, yêu cầu Bên B thanh toán. Trong mọi trường hợp, Bên B cam kết nghiêm túc thực hiện nghĩa vụ thanh toán của mình cho Bên A.

6.9 Việc bồi thường thiệt hại (nếu có) được thực hiện theo quy định của pháp luật Việt Nam.

Văn bản này được xác thực tại https://eoffice.vietsov.com.vn với số định danh: 13443/25-HSMT-PTM/BMĐH

<u>Điều 7:</u> Bảo hành

7.1 Bên B chịu trách nhiệm bảo hành chất lượng của hàng hóa trong thời hạn …… kể từ ngày giao hàng. Điều kiện bảo hành theo đúng tiêu chuẩn bảo hành của nhà sản xuất.

7.2 Trong thời gian bảo hành nếu Bên A phát hiện có hư hỏng, sai sót về chất lượng hàng hóathì Bên A sẽ thông báo kịp thời bằng fax/email cho Bên B biết để cùng nhau xác minh. Việc xác minh sai sót về chất lượng phải được Bên B tiến hành không chậm quá 15 ngày lịch kể từ ngày Bên B nhận được thông báo. Việc xác minh phải được lập thành biên bản,trong đó ghi rõ kết luận về nguyên nhân gây ra hư hỏng, xác định trách nhiệm thay thế cáimới/sửa chữa các hư hỏng đó thuộc về bên nào và thời hạn thay thế/sửa chữa làm căn cứpháp lý trong thực hiện hợp đồng này.

7.3 Tùy mức độ hư hỏng, nhưng không quá 15 ngày lịch kể từ ngày có kết luận về nguyên nhân hư hỏng, sai sót về chất lượng hàng hóa do lỗi của Bên B thì Bên B phải tiến hành sửa chữa các sai sót về chất lượng hoặc đổi lại hàng mới cho Bên A.

7.4 Trong thời hạn 07 ngày lịch kể từ ngày nhận được thông báo của Bên A, nếu Bên B không trả lời thì coi như đã chấp nhận có sai sót về chất lượng hàng do lỗi của mình và có tráchnhiệm phải sửa chữa các sai sót đó hoặc đổi lại hàng mới ngay trong vòng 15 ngày kể từngày nhận được thông báo của Bên A.

7.5 Nếu Bên B tiến hành sửa chữa hoặc đổi lại hàng mới bị chậm so với thời hạn qui định ở mục 7.3 và 7.4 của hợp đồng này thì Bên B phải chịu phạt theo mức phạt giao hàng chậm như qui định ở mục 6.1 của hợp đồng này.

7.6 Trong thời hạn quy định trên tại điều 7 của hợp đồng này, nếu Bên B không tiến hành khắc phục (sửa chữa các sai sót về chất lượng do lỗi của mình hoặc đổi lại hàng mới) thì Bên A có quyền tiến hành khắc phục (sửa chữa và/hoặc thay mới) và Bên B phải hoàn trả lại cho Bên A toàn bộ chi phí khắc phục, đồng thời phải chịu phạt 8% giá trị của mặt hàngnày. Cách thức Bên A thu hồi tiền phạt từ Bên B quy định tại điều 6.7 của hợp đồng này.

7.7 Hàng hóa sau khi được Bên B sửa chữa và thay thế trong thời kỳ bảo hành sẽ được Bên Bbảo hành lại …tháng kể từ ngày bàn giao (có biên bản giao nhận hàng như quy định tại Phụ lục 02 của hợp đồng này).

<u>Điều 8:</u> Thanh toán

8.1 Bên A thanh toán cho Bên B 100% giá trị hóa đơn hàng đã giao bằng phương thức chuyển khoản qua ngân hàng trong vòng 30 ngày làm việc kể từ ngày nhận được bộ chứng từ thanh toán gồm:
- 02 Hóa đơn thuế GTGT (02 bản gốc), đồng tiền ghi trên Hóa đơn là Việt Nam Đồng, trong đó:
+ Hóa đơn số 01: cho giá trị hàng hóa nhập khẩu ghi trên Tờ khai hải quan và thuế GTGT cho hàng nhập khẩu ghi trên tờ khai hải quan. Trên hóa đơn chỉ ghi dòng giá bán là giá không có thuế GTGT. Dòng thuế suất và giá trị thuế GTGT không ghi và được gạch bỏ hoặc theo các quy định hiện hành của pháp luật tại ngày xuất hóa đơn. Tỷ giá quy đổi sang VNĐ lấy theo tỷ giá ghi trên tờ khai Hải quan.
+ Hóa đơn số 02: Cho phần phát sinh chênh lệch giữa giá trị hàng hóa đã khai báo tại khâu nhập khẩu và giá trị hàng hóa ghi trong hợp đồng này. Trên hóa đơn, dòng thuế suất và giá trị thuế GTGT ghi giá trị phù hợp với quy định hiện hành.
- 01 bản gốc Biên bản giao nhận hàng (Điều 4.8 của Hợp đồng này).
- Các chứng từ (theo quy định tại Điều 3.2 của Hợp đồng này).
- Thông báo tỷ giá của Ngân hàng (01 bản copy).
- Bảo đảm thực hiện Hợp đồng (01 bản copy).
- Tờ khai Hải quan hàng nhập khẩu (bản copy)

8.2 Bên A chỉ thanh toán cho Bên B đối với hàng hóa hoàn toàn phù hợp với yêu cầu nêu trong hợp đồng.

8.3 Số tài khoản giao dịch theo hợp đồng này của Bên B: theo thông tin ghi tại trang 1 của hợp đồng.

8.4 Phí chuyển tiền do Bên A chịu.

Văn bản này được xác thực tại https://eoffice.vietsov.com.vn với số định danh: 13443/25-HSMT-PTM/BMĐH

<u>Điều 9:</u> Bảo đảm thực hiện Hợp đồng

9.1 Trong vòng 07 ngày làm việc sau ngày ký hợp đồng (ghi tại trang 01 của hợp đồng), Bên B phải nộp giấy bảo lãnh thực hiện hợp đồng (Phụ lục số 3 của hợp đồng này) được cấp bởi Ngân hàng có uy tín. Giá trị Bảo đảm thực hiện hợp đồng bằng **8%** tổng giá trị hợp đồng. Giấy bảo lãnh này có hiệu lực bằng thời hạn giao hàng quy định tại mục 4.1 hợp đồng này cộng thêm 60 ngày lịch.

9.2 Mọi chi phí liên quan đến việc phát hành giấy bảo lãnh thực hiện hợp đồng do Bên B chịu.

9.3 Trong thời gian quy định tại mục 9.1 nêu trên, Bên B phải nộp bản gốc bảo lãnh thực hiện hợp đồng cho Bên A. Nếu sau thời gian quy định nói trên, Bên A không nhận được bảo lãnh thực hiện Hợp đồng thì Bên A có quyền đơn phương chấm dứt Hợp đồng và không hoàn trả Bảo đảm dự thầu của Bên B hoặc áp dụng quy định tại mục 6.8 của Hợp đồng này.

9.4 Bên B không được nhận lại Bảo đảm thực hiện hợp đồng trong trường hợp Bên B từ chối/không thực hiện hợp đồng sau khi ký hợp đồng.

9.5 Trong trường hợp Bên B vi phạm trách nhiệm thực hiện hợp đồng theo quy định tại hợp đồng này thì khoản tiền bảo đảm được Bên A dùng để khấu trừ tiền phạt.

9.6 Bên B phải ngay lập tức yêu cầu Ngân hàng phát hành giấy bảo lãnh thực hiện hợp đồng thực hiện sửa đổi giấy Bảo đảm thực hiện Hợp đồng trong trường hợp cần gia hạn thời gian hiệu lực của Bảo lãnh này vì lý do chậm giao hàng hoặc gia hạn thời hạn giao hàng, đồng thời gửi ngay cho Bên A giấy Bảo lãnh đã gia hạn hiệu lực (bản gốc) chậm nhất là 07 ngày làm việc trước khi Bảo lãnh cũ hết hiệu lực. Trường hợp Bên B chậm gia hạn hiệu lực bảo lãnh khi có yêu cầu của Bên A bằng văn bản thì Bên B sẽ chịu phạt 0,2% giá trị bảo lãnh tương ứng/ mỗi ngày chậm. Tổng giá trị phạt này không vượt quá 8% giá trị bảo lãnh tương ứng.

<u>Điều 10:</u> Bất khả kháng

10.1 Sự kiện bất khả kháng là sự kiện xảy ra một cách khách quan không thể lường trước được và không thể khắc phục được mặc dù đã áp dụng mọi biện pháp cần thiết và khả năng cho phép như: chiến tranh, bạo loạn, xung đột vũ trang, cấm vận, thiên tai (lũ lụt, bão, lốc xoáy, động đất, sóng thần), hỏa hoạn, dịch bệnh (Epidemic, Pandemic) được WHO/Quốc gia công bố, lệnh phong tỏa Vùng/Quốc gia do Chính quyền sở tại áp đặt.

10.2 Bên gặp sự kiện bất khả kháng dẫn đến việc không thực hiện được nghĩa vụ theo hợp đồng do ảnh hưởng trực tiếp bởi các sự kiện bất khả kháng có nghĩa vụ phải ngay lập tức thông báo cho bên kia biết, bao gồm cung cấp thông tin, giải trình về sự ảnh hưởng trực tiếp của sự kiện bất khả kháng đến việc vi phạm thực hiện hợp đồng kèm chứng cứ chứng minh, các biện pháp đã được thực hiện để khắc phục vấn đề và giảm thiểu tổn thất. Việc chậm thông báo, cung cấp thông tin và giải trình nếu trễ hơn 14 ngày lịch sau khi sự kiện bất khả kháng xảy ra sẽ làm cho bên gặp bất khả kháng mất quyền miễn trách sau này vì lý do bất khả kháng.

10.3 Văn bản xác nhận của Phòng Thương mại và Công nghiệp Việt Nam hoặc cơ quan có thẩm quyền ở nơi xảy ra sự kiện bất khả kháng là bằng chứng đủ để chứng minh sự kiện và thời gian xảy ra bất khả kháng.

10.4 Nếu sự kiện bất khả kháng kéo dài hơn 02 tháng, mỗi bên đều có quyền chấm dứt hợp đồng này mà không phải bồi thường bất cứ một khoản tiền nào cho bên kia.

10.5 Các khó khăn trong sản xuất như thiếu vật tư, điện, nhân công, đình công… không được coi là bất khả kháng và không miễn cho Bên B nghĩa vụ giao hàng hoặc giao hàng muộn; Các thông tin từ trang báo, mạng và các phương tiện truyền thông khác chỉ mang tính chất tham khảo.

<u>Điều 11:</u> Giải quyết tranh chấp

11.1 Bất kỳ tranh chấp nào phát sinh từ hợp đồng này sẽ được giải quyết bằng thương lượng giữa hai bên trên tinh thần hợp tác, hai bên cùng có lợi và tôn trọng lẫn nhau.

11.2 Trường hợp tranh chấp không thể giải quyết bằng thương lượng thì sẽ được giải quyết bằng trọng tài tại Trung tâm Trọng tài Quốc tế Việt Nam (VIAC) tại Hà Nội theo Quy tắc tố tụng

Văn bản này được xác thực tại https://eoffice.vietsov.com.vn với số định danh: 13443/25-HSMT-PTM/BMĐH

trọng tài của Trung tâm này. Số lượng trọng tài viên là 03 người. Luật áp dụng là Luật Việt Nam.

Phán quyết của Trung tâm trọng tài là cuối cùng và buộc hai bên phải tuân thủ.

Án phí do bên thua kiện chịu.

<u>Điều 12:</u> Các điều khoản khác

12.1 Bất kỳ sự sửa đổi, bổ sung nào đối với Hợp đồng này đều phải được lập thành văn bản và có chữ ký của cả hai bên. Mọi giao dịch trong quá trình thực hiện Hợp đồng được các Bên thực hiện bằng văn bản và gửi theo đường bưu chính hoặc theo số Fax tới địa chỉ đăng ký hoặc số Fax của mỗi Bên ghi trong hợp đồng và email đến địa chỉ email…theo mẫu thể hiện tại Phụ lục số 4 (A, B) kèm theo.

12.2 Những điều không quy định hoặc quy định không đầy đủ trong Hợp đồng này sẽ căn cứ vào luật pháp Việt Nam hiện hành.

12.3 Không bên nào được chuyển quyền và nghĩa vụ của mình theo hợp đồng này cho bên thứ ba mà không được sự đồng ý trước bằng văn bản của bên kia.

12.4 Trong quá trình thực hiện hợp đồng trường hợp xảy ra tranh chấp thì các văn bản dẫn chiếu được xem xét theo thứ tự ưu tiên xử lý theo mục Mục 2.2 ĐKC.

12.5 Hợp đồng này có hiệu lực kể từ ngày Ngân hàng Bên B mở bảo lãnh thực hiện Hợp đồng (ngày hiệu lực của bảo lãnh) và hoàn thành việc ký Hợp đồng nhưng không muộn hơn 7 ngày làm việc so với ngày được ghi trên Hợp đồng và tiếp tục cho đến khi hai bên thực hiện hết trách nhiệm của mình như quy định trong hợp đồng.

12.5 Hết thời hạn hiệu lực của hợp đồng, nếu hai bên không có khiếu nại gì coi như hợp đồng đã được thanh lý.

12.6 Hợp đồng gồm **……** trang và 04 Phụ lục (Phụ lục số 01: Phạm vi cung cấp và bảng giá trị, Phụ lục số 02: Biên bản giao nhận hàng, Phụ lục số 03: Bảo lãnh Thực hiện Hợp đồng, Phụ lục số 04 (A, B): Mẫu Phương thức giao dịch) được lập thành 06 bản bằng tiếng Việt (có sử dụng tiếng Anh mô tả hàng hóa tại Phụ lục số 01), các bản có giá trị pháp lý như nhau, Bên A giữ 04 bản, Bên B giữ 02 bản.

ĐẠI DIỆN BÊN A	**ĐẠI DIỆN BÊN B**

Văn bản này được xác thực tại https://eoffice.vietsov.com.vn với số định danh: 13443/25-HSMT-PTM/BMĐH

PHỤ LỤC SỐ 01
HỢP ĐỒNG SỐ .....
Mua ..... (Lô ...).

PHẠM VI CUNG CẤP VÀ BẢNG GIÁ TRỊ

№	Stt	Tên hàng hoá	Code /Part number	Nhà SX	Nước xuất xứ	ĐVT	Số lượng	Đơngiá (VND)	Thành Tiền (VND)
Tổng giá trị hàng hoá (VNĐ): Theo điều kiện giao tại kho Vietsovpetro đã bao gồm thuế, phí, lệ phí phát sinh trên lãnh thổ Việt Nam nhưng không bao gồm thuế nhập khẩu và thuế GTGT của giá trị hàng hóa ghi trên tờ khai Hải quan. Thuế nhập khẩu và thuế GTGT trên được miễn theo Hiệp định (Lô 09-1). Bên B sẽ sử dụng Hạn mức nhập khẩu của Bên A để làm thủ tục nhập khẩu hàng hóa.									

ĐẠI DIỆN BÊN A **ĐẠI DIỆN BÊN B**

Văn bản này được xác thực tại https://eoffice.vietsov.com.vn với số định danh: 13443/25-HSMT-PTM/BMĐH

PHỤ LỤC SỐ 02

Phê duyệt - Утверждаю
Thủ trưởng đơn vị đặt hàng
Директор пред–я заказчика

Ngày……..tháng……..năm 20….

Phê duyệt - Утверждаю
Giám đốc XNDV Cảng &Cung ứng vật tư TB
Директор ПОСОМ

Ngày……..tháng……..năm 20….

BIÊN BẢN GIAO NHẬN HÀNG
АКТ О ПРИЁМЕ - ПЕРЕДАЧЕ ТОВАРОВ

Ngày…. tháng…. năm 20….
Căn cứ HĐ (biên bản) số: ký ngày…. tháng….năm 20…
На основнии Договора номер:
Chúng tôi, những người ký tên dưới đây - Мы. Нижеподписавщиеся:
1- Đại diện bên giao - Представители поставщика:
- Ông (Bà) Chứcvụ:
- Ông (Bà): Chứcvụ:
2- Đại diện bên nhận - Представители получателя:
2.1 XN dịch vụ cảng & cung ứng vật tư TB - ПОСОМ
- Ông (Bà): Chứcvụ:
- Ông (Bà): Chứcvụ:
2.2 Đơn vị đặt hàng - Представители предприятия - заказчика:
- Ông (Bà): Chứcvụ:
- Ông (Bà): Chứcvụ:
- Ông (Bà): Chứcvụ:
- Ông (Bà): Chứcvụ:
Cùng nhau tiến hành giao nhận hàng hóa, cụ thể như sau: - Произвели приёмо - передачу следующих товаров на складе:...

STT П/П	Tên hàng, Ký hiệu, Quy cách Наименование. Марка товаров	ĐVT ЕД	Thực nhập Фак. Получение		Bao bì Тара	Chất lượng hàng Качество
			Số lượng Кол	Trọng lượng Вес		

- Mẫu phân tích các mặt hàng No được lấy tại - Образец товара получен на складе:
……Ngày…….tháng…….năm 20….
- Người lấy mẫu: - Лаборант:…… Chức vụ - Должность
- Người lấy mẫu: - Лаборант:…… Chức vụ - Должность

Đối với những mặt hàng lấy mẫu phân tích nêu trên thì hàng chỉ chuyển chủ từ bên giao sang bên nhận. Sau khi có kết quả phân tích mẫu đạt yêu cầu như mẫu chào hàng. Trong thời gian chờ kết quả phân tích mẫu, bên nhận (XNDV hoặc đơn vị đặt hàng) nhận giữ hộ.
CHỨNGTỪKÈMTHEO - Прилагаемые документы:

Văn bản này được xác thực tại https://eoffice.vietsov.com.vn với số định danh: 13443/25-HSMT-PTM/BMĐH

- Chứng chỉ phẩm chất - Сертификат:……
- Hóa đơn (phiếu xuất kho) - Счёт: ……
- Bản kê chi tiết danh điểm mặt hàng (Перечень товаров) gồm __bản __tờ
- Các chứng từ khác - Другие документы : ……

……
……

Biên bản này chỉ lập một bản và chỉ có giá trị để làm thủ tục thanh toán sau khi được Giám đốc XNDVCảng & Cung ứng vật tư TB và lãnh đạo đơn vị đặt hàng phê duyệt (trường hợp giao nhận thẳng cho đơn vị đặt hàng thì biên bản này phải được thủ trưởng đơn vị đặt hàng phê duyệt trước).
Ngày giao hàng của lô hàng này là …

ĐẠI DIỆN BÊN GIAO **KÝ TÊN** - Подписи **ĐẠI DIỆN BÊN NHẬN**
Представители поставщика: Представители получателя:
(Họ tênvà chữ ký) (Họ tênvà chữ ký)

Xác nhận chất lượng của phòng thí nghiệm hoặc đơn vị đặt hàng (nếu có) - Справка лаборатории (заказчика) по качеству

……
……
Đại diện phòng thí nghiệm (Hoặc đơn vị đặt hàng) - Представитель лаборатории (заказчика)
Họvà tên - Фамиля..... Ký tên: Подпись

Ngày…….tháng……..năm 20….
Kiểm tra và xác nhận: Các mặt hàng nêu trên có số lượng, ký mã hiệu, xuất xứ hàng hóa, chứng chỉ chất lượng & được kiểm tra chất lượng v.v. phù hợp với các quy định của hợp đồng (Biên bản)
Заключение:
Состояние товаров. Количество марки. Место происхождения. Сертификат по качеству и проверка качества....выщеуказнных товаров соответствуют условиям Договора:

T.P vật tư thiết bị - Начальник курирующего отделаю
Ký tên: Подпись *Ngày…….tháng……..năm 20….*

Trưởng phòng THHĐ - Начальник ОКД
Ký tên: Подпись *Ngày…….tháng……..năm 20….*

Văn bản này được xác thực tại https://eoffice.vietsov.com.vn với số định danh: 13443/25-HSMT-PTM/BMĐH

PHỤ LỤC SỐ 03
MẪU BẢO LÃNH THỰC HIỆN HỢP ĐỒNG

Ngày tháng năm 20…

Kính gửi: ...

Liên quan tới Hợp đồng _____ về việc _____ (sau đây được gọi là "Hợp đồng") được ký giữa _____ (sau đây gọi là "BÊN ĐƯỢC BẢO LÃNH") và _____ (sau đây gọi là "BÊN THỤ HƯỞNG"), chúng tôi, _____ có trụ sở chính tại ____ (sau đây gọi là "BÊN BẢO LÃNH") phát hành Thư bảo lãnh không hủy ngang và vô điều kiện cho bên thụ hưởng với số tiền là _____ (Bằng chữ: _____) (sau đây gọi là "THƯ BẢO LÃNH").

THƯ BẢO LÃNH này có hiệu lực kể từ ngày phát hành và sẽ duy trì hiệu lực cho đến _____ sau đây gọi là "Ngày hết hiệu lực". Đối với bất cứ sự gia hạn, đổi mới hoặc chuyển nhượng Hợp đồng vượt quá thời gian được quy định trong THƯ BẢO LÃNH này, BÊN THỤ HƯỞNG sẽ không cần phải thông báo hoặc được sự đồng thuận của BÊN BẢO LÃNH. THƯ BẢO LÃNH này sẽ được gia hạn dựa trên yêu cầu bằng văn bản từ BÊN ĐƯỢC BẢO LÃNH để đảm bảo cho thời gian gia hạn, đổi mới hoặc chuyển nhượng của Hợp đồng.

BÊN BẢO LÃNH cam kết **không hủy ngang và vô điều kiện** thanh toán ngay cho BÊN THỤ HƯỞNG một khoản tiền hay những khoản tiền, theo chỉ thị của BÊN THỤ HƯỞNG, tổng không vượt quá số tiền bảo lãnh nêu trên trong vòng 05 ngày làm việc kể từ khi nhận được văn bản yêu cầu của BÊN THỤ HƯỞNG về việc vi phạm nghĩa vụ theo Hợp đồng của BÊN ĐƯỢC BẢO LÃNH và không cần bất kỳ sự giải thích nào, chúng tôi cam đoan sẽ trả cho BÊN THỤ HƯỞNG với số tiền bảo đảm là …VND.

Sau Ngày hết hiệu lực, THƯ BẢO LÃNH này sẽ tự động không còn giá trị cho dù bản gốc THƯ BẢO LÃNH và các Thư sửa đổi liên quan (nếu có) có được gửi trả lại BÊN BẢO LÃNH hay không.

Số tiền bảo lãnh nêu trên sẽ được thanh toán ngay bởi BÊN BẢO LÃNH cho BÊN THỤ HƯỞNG cho dù có sự tranh cãi hoặc phản đối nào của BÊN ĐƯỢC BẢO LÃNH hoặc của BÊN BẢO LÃNH hoặc của bất kì bên thứ ba nào khác, và bất kể có hay không sự tranh chấp giữa BÊN ĐƯỢC BẢO LÃNH và BÊN THỤ HƯỞNG về hoặc liên quan tới Hợp đồng hoặc về bất cứ vấn đề khác và cho dù những tranh chấp này, nếu có, đã được giải quyết, dàn xếp, kiện tụng hoặc phân xử bằng bất kỳ hình thức nào.

BÊN BẢO LÃNH hoặc BÊN ĐƯỢC BẢO LÃNH sẽ không được giải trừ bất cứ nghĩa vụ nào theo THƯ BẢO LÃNH này cho dù có bất cứ sự sửa đổi, thay đổi, thanh toán sai lệch, gia hạn nào liên quan tới Hợp đồng hay bất kỳ sự trì hoãn ân hạn nào của BÊN THỤ HƯỞNG trong hoặc liên quan đến bất cứ vấn đề gì của Hợp đồng.

Việc đòi tiền nhiều lần theo bảo lãnh này là được phép và theo đó, Số tiền bảo lãnh nêu trên sẽ tự động giảm tương ứng với số tiền mà Ngân hàng đã thực hiện thanh toán cho Bên thụ hưởng theo Thư bảo lãnh.

Thư bảo lãnh được điều chỉnh và giải thích theo pháp luật Việt Nam. Bất kỳ tranh chấp nào phát sinh từ hoặc liên quan đến Thư bảo lãnh sẽ [do Tòa án nhân dân có thẩm quyền của Việt Nam giải quyết theo quy định của pháp luật] / [sẽ được giải quyết tại Trung tâm Trọng tài quốc tế Việt Nam (VIAC) bên cạnh Phòng Thương mại và Công nghiệp Việt Nam theo quy tắc tố tụng trọng tài của VIAC].

THƯ BẢO LÃNH này được phát hành duy nhất 01 (một) bản và không được phép chuyển nhượng.

TÊN NGÂN HÀNG BẢO LÃNH
(Ký tên và đóng dấu)

Văn bản này được xác thực tại https://eoffice.vietsov.com.vn với số định danh: 13443/25-HSMT-PTM/BMĐH

PHỤ LỤC SỐ 04 (A)
MẪU THƯ TÍN GIAO DỊCH THỰC HIỆN HỢP ĐỒNG

Ngày tháng năm 20..

Kính gửi: **Liên doanh Việt-Nga Vietsovpetro/Nhà thầu.**
(ghi địa chỉ số Fax của Bên giao dịch)

Người nhận: Họ và Tên + Chức danh của Lãnh đạo VSP ký hợp đồng
Sao gửi: Lãnh đạo Phòng Thương mại VSP

Email: Đồng thời gửi e-mail đến địa chỉ của Người thực hiện/ Người phụ trách

(Ghi nội dung giao dịch về: Thay đổi về Hàng hoá/Dịch vụ, tiến độ, sử dụng Quota, các nội dung liên quan tới giá trị HĐ, thanh toán…**)**

ĐẠI DIỆN BÊN ….
(Ký tên và đóng dấu)

PHỤ LỤC SỐ 04 (B)
MẪU THƯ TÍN GIAO DỊCH THỰC HIỆN HỢP ĐỒNG

Ngày tháng năm 20..

Kính gửi: **Liên doanh Việt-Nga Vietsovpetro/Nhà thầu.**
(ghi địa chỉ số Fax của Bên giao dịch)

Người nhận: Phòng Thương mại VSP/ XN Dịch vụ Cảng và CUVTTB/ Xí nghiệp Xây lắp.

Email: Đồng thời gửi e-mail đến địa chỉ của Người thực hiện/ Người phụ trách

(Ghi nội dung giao dịch về: Thông báo giao hàng, gửi chứng từ Hàng hóa, thông báo bắt đầu thực hiện DV/XL, thông tin về nhân sự/thiết bị thực hiện DV/XL...**)**

ĐẠI DIỆN BÊN ...
(Ký tên và đóng dấu)

Văn bản này được xác thực tại https://eoffice.vietsov.com.vn với số định danh: 13443/25-HSMT-PTM/BMĐH

PART 4. APPENDICES

This Chapter includes: Scope of Supply, Technical requirements, Technical evaluation criteria and Other technical documents + link for reference (if any).

1 – SCOPE OF SUPPLY and TECHNICAL REQUIREMENT (*see attachment)*

2 - TECHNICAL EVALUATION CRITERIA (*see attachment)*

Văn bản này được xác thực tại https://eoffice.vietsov.com.vn với số định danh: 13443/25-HSMT-PTM/BMĐH

VIETSOVPETRO

BK-10A WELLHEAD PLAFORM

Approved By
Deputy General Director
"VIETSOVPETRO"

Signed by: Đặng Đức Phong
Date: 12/09/2025 08:27:43
Certified by: Vietsovpetro CA

DANG DUC PHONG

TECHNICAL REQUIREMENT
OIL DRAIN PUMP PACKAGE

DOC.NO	**:**	**OCD-BK10A-TR-06**
DATE	**:**	**09/2025**
REV	**:**	**0**

ISSUE FOR BID

Văn bản này được xác thực tại https://eoffice.vietsov.com.vn với số định danh: 13443/25-HSMT-PTM/BMĐH

Văn bản này được xác thực tại https://eoffice.vietsov.com.vn với số định danh: 13443/25-HSMT-PTM/BMĐH

TABLE OF CONTENT

1. PURPOSE AND SCOPE OF USE 4
2. GENERAL REQUIREMENTS FOR EQUIPMENT 4
3. TECHNICAL REQUIREMENT 4
4. VSP'S MANUFACTURERS LIST 5
5. RECOMMENDED ORIGIN OF GOODS 5
6. TIME AND LOCATION OF DELIVERY 6
7. QUANTITY AND PACKAGING 6
8. TECHNICAL DOCUMENTATION REQUIREMENTS 6
9. REQUIREMENTS FOR CERTIFICATES OF THE GOODS 7
10. EXPERIENCE 8
11. METHODS FOR EVALUATION OF TECHNICAL PROPOSALS 8
12. APPENDIX 8

Văn bản này được xác thực tại https://eoffice.vietsov.com.vn với số định danh: 13443/25-HSMT-PTM/BMĐH

1. PURPOSE AND SCOPE OF USE

- This document covers the requirements for design, engineering, purchasing, manufacturing, fabrication, assembling, painting, inspection, testing, packing, transportation, delivery, documentation, certification of **Oil Drain Pump Package** for BK-10A Wellhead Platform at White Tiger Oil Field offshore of Vietnam, hereinafter referred to as "Goods".
- Detail requirements of Goods to be referred to all documents and drawings in the Appendix 1.

2. GENERAL REQUIREMENTS FOR EQUIPMENT

- **Year of manufacture:** Goods shall be brand new, unused and manufactured in year 2026 or later.
- Bidders must clearly state the name, code/model, technical specifications, manufacturer and origin of Goods.
- **Warranty:** Warranty for the complete equipment shall be provided for a period of eighteen (**18**) months from the delivery date at Vietsovpetro's site or twelve (**12**) months after commissioning completion whichever comes first.

3. TECHNICAL REQUIREMENT

- All goods shall be in accordance with all Technical Documents listed in Appendix 1.

Item	Description	Unit	Remark
1	**DRAIN PUMP PACKAGE:** **- Pump Tag name: H-211** - Type: Reciprocating - Capacity: 5 m3/Hr - Suction Pressure: 2 Barg Max - Discharge Pressure: 31 Barg Min - Operating Temperature: 45°C - Drivers: 380V, 50 Hz, 3 Phase - Heating: 220V, 50 Hz, 1 Phase - Including nitrogen charging kit for dampeners. Oil Drain Pump including all equipment, material and requirement specified in related datasheet, specification and PID drawing. **Note:** *Suction/ Discharge Dampeners and Reducer will be supplied by Vendor.*	Set	The Equipment and Materials shall include all items and requirement as specified in the following documents: • BK1.BK10.BK10A-001TS.BK10A-ME1-RQ-002 Purchase Requisition for Drain Pump. • BK1.BK10.BK10A-001-TS.BK10A-ME1-DS-003 Datasheet for Drain Pump. • BK1.BK10.BK10A-001-TS.BK10A-ME1-SP-003 Specification for Reciprocating Process Pumps. • BK1.BK10.BK10A-001-TS.BK10A-PR1-PID-007 Pid for Open Drain and Closed Drain.Vent System. • And other related documents and drawings in the Appendix 01.

Văn bản này được xác thực tại https://eoffice.vietsov.com.vn với số định danh: 13443/25-HSMT-PTM/BMĐH

- All document and drawing in Appendix 1 is preliminary engineering design. All detail engineering design document and drawing is Bidder's scope
- In the event of any conflict between this Technical Requirement, Datasheet, Specification and other documents, the order of the precedence of the documents is as follows:
    + This Technical Requirement.
    + Datasheet.
    + P&ID Drawing
    + Specification.
    + Other documents and drawings.
    + International Codes and Standards.

4. VSP'S MANUFACTURERS LIST

The Bidder is recommended to offer the manufacturer listed below. In case the manufacturer is not on the Vendor List, Bidder needs to provide information about the manufacturer's capacity (production capacity, experience, production process, facilities, certification system, similar contracts, documents proving production capacity...) for evaluation.

Description	Recommended Manufacturer
Drain Pump Package	SABI Pompe, Finder Pompe, Titano, Bear, Seko

5. RECOMMENDED ORIGIN OF GOODS

- The Bidder is recommended to offer the country of origin listed below. Other countries of origin will also be evaluated.

Description	Recommended Country of Origin
Drain Pump Package	G7, Russia, EU, Australia, Korea, Malaysia, Singapore, Vietnam.

Văn bản này được xác thực tại https://eoffice.vietsov.com.vn với số định danh: 13443/25-HSMT-PTM/BMĐH

- In case the bidder offers many origins for one item, Vietsovpetro will evaluate the item according to the origin with the lowest score.
- For the Goods with originating from countries/territories that are in a state of armed conflict, sanctions or embargo, where the import of goods may affect the performance of the contract and delivery schedule, in that case the offer will not be accepted.

6. TIME AND LOCATION OF DELIVERY

- All GOODS shall be delivered by 1 shipment at Vietsovpetro Port or Vietsovpetro's warehouse No. 67, 30/4 Street, Rach Dua Ward, Ho Chi Minh City.
- Delivery time of GOODs shall be **150 calendar days** after issue of Letter of Intent (LOI) including vendor data review, packing/handling, shipping and transportation time.

7. QUANTITY AND PACKAGING

- The bidder must offer full package of this requisition.
- Goods supplied for this requisition shall be packed following international standards for export packing to ensure the safety of Goods from damages and corrosion during transportation and suitable for crane operations and handling;
- Goods must be wrapped in a waterproof box to ensure protection from any damage and corrosion during their transportation and storage in the Buyer's country within the guarantee period;
- Goods must be clearly labeled on the package, with basic information such as manufacturer's name, product name, and weight if any.
- Packaging shall be complied with all requirements in the documents listed in Appendix 1 of this technical requirement.

8. TECHNICAL DOCUMENTATION REQUIREMENTS

- As minimum, Bidder shall be responsible for providing all documents/drawings as following:

No.	Description	With BID	After Purchase order (for Review/ Information)	Final with Equipment Data book
1.	List of 02 similar contracts the manufacturer has performed.	YES		
2.	List of vendor's documents and drawings		R	YES
3.	Equipment list		R	YES
4.	Pump datasheet	YES	R	YES

Văn bản này được xác thực tại https://eoffice.vietsov.com.vn với số định danh: 13443/25-HSMT-PTM/BMĐH

5.	Performance Curve	YES	R	YES
6.	Motor datasheet	YES	R	YES
7.	General Arrangement Drawings	YES	R	YES
8.	Cross section drawing			YES
9.	Gear Reducer Drawing		R	YES
10.	Pulsation Dampener Drawing		R	YES
11.	Nameplate drawings		R	YES
12.	Inspection and test plan		R	YES
13.	Painting procedure		R	YES
14.	FAT procedure		R	YES
15.	Test reports: Hydrostatic test, Performance test, Mechanical running test, NPSH test, …		I	YES
16.	Material test certificates		I	YES
17.	Third parties approval certificates		I	YES
18.	Lubricant list	YES	I	YES
19.	General Catalogue	YES	I	YES
20.	Installation, operating & maintenance manual	YES	I	YES
21.	Vendor data book - VDB		I	YES

- *All documents and drawings in tender proposal and final with equipment shall be provided with: one (1) original and three (3) copies and one (1) set of electronic copies on USB.*
- *All final documents/ drawing for installation, operation and maintenance shall be provided with: one (01) original and three (03) copies and one (01) set of electronic copies on USB.*

9. REQUIREMENTS FOR CERTIFICATES OF THE GOODS

- All relevant certificates must be confirmed to provide and to be submitted before deliver, but not limit to the following table below:

Item	Certificate	Issued by	Type
1	Certificate of Origin	Issued by the competent authority of Manufacturer's country or exporter's country	Original
2	Certification of Quality and Quantity	Manufacturer	Original

Văn bản này được xác thực tại https://eoffice.vietsov.com.vn với số định danh: 13443/25-HSMT-PTM/BMĐH

3	Type Examination certificate for Motor	Third party such as DNV, BV, ABS, Lloyds Register, VR	Certified copy
4	Certificate of Material as per section 6.2 of pump specifications	The raw material manufacturer or equipment manufacturer	Original or Certified copy
5	Test report as per test requirement in Datasheet and Specification.	Manufacturer	Original
6	Package Certificate of Conformity / Compliance (include FAT report, documents review…)	Third party such as DNV, BV, ABS, Lloyds Register, VR	Original
7	Warranty Certificate	Bidder	Original

Note:

a. Certified copy: Certified copy by manufacturer or final fabricator/authorized distributor.

b. Electronic CO certificates with provided web-link to check are acceptable.

c. In addition to the certificates mentioned above, the Bidder shall be responsible for coordinating with the Vietnam Register (VR) during the inspection prior to the fabrication (or installation) of the materials (or equipment) for the project. The fee of this inspection by VR, if required, shall be paid by Vietsovpetro

d. The bidder shall be responsible for carrying out the request of VietNam Register (VR) in the event that the documents or certificates provided by the Contractor does not comply with the contractual requirements and shall bear all costs incurred (if any) to rectify the non-compliance.

10. EXPERIENCE

- Manufacturers for completed Pumps package shall have at least 02 similar contract during last 05 years.

11. METHODS FOR EVALUATION OF TECHNICAL PROPOSALS

Technical offers will be evaluated for the entire package according to the attached Technical Evaluation Criteria/ Technical Scoring Table Doc. No. OCD-BK10A-TE-06.

12. APPENDIX

APPENDIX 1: TECHNICAL DOCUMENTS.

Note: *All document and drawing in Appendix 1 is preliminary engineering design. All detail engineering design document and drawing is Bidder's scope.*

Văn bản này được xác thực tại https://eoffice.vietsov.com.vn với số định danh: 13443/25-HSMT-PTM/BMĐH

APPENDIX 1
TECHNICAL DOCUMENTS

No.	DOCUMENT NUMBER	DESCRIPTION	NOTE
1.	BK1.BK10.BK10A-001TS.BK10A-ME1-RQ-002	PURCHASE REQUISITION FOR DRAIN PUMP	
2.	BK1.BK10.BK10A-001-TS.BK10A-ME1-DS-003	DATASHEET FOR DRAIN PUMP	
3.	BK1.BK10.BK10A-001-TS.BK10A-ME1-SP-003	SPECIFICATION FOR RECIPROCATING PROCESS PUMPS	
4.	BK1.BK10.BK10A-001-TS.BK10A-PR1-PID-007	PID FOR OPEN, CLOSED DRAIN/VENT SYSTEM	
5.	BK1.BK10.BK10A-001-TS.BK10A-PR1-CA-003	DRAIN PUMP SIZING CALCULATION	
6.	BK1.BK10.BK10A-001-TS.BK10A-PI1-LD-001	BK10A EQUIPMENT LAYOUT DRAWINGS	
7.	BK1.BK10.BK10A-001-GE-PI1-SP-001	PIPING MATERIAL CLASS SPECIFICATION	
8.	BK1.BK10.BK10A-001-GE-PI1-SP-002	SPECIFICATION FOR MANUAL VALVES	
9.	BK1.BK10.BK10A-001-GE-ES2-DS-006	DATASHEET FOR LV MOTORS	
10.	BK1.BK10.BK10A-001-GE-ES2-SP-006	SPECIFICATION FOR LV MOTORS	
11.	BK1.BK10.BK10A-001-GE-ES2-SP-008	SPECIFICATION FOR ELECTRICAL REQUIREMENT FOR PACKAGE EQUIPMENT	
12.	BK1.BK10.BK10A-001-GE-IA2-SP-003	GENERAL INSTRUMENT SPECIFICATION	
13.	BK1.BK10.BK10A-001-GE-IA2-SP-006	SPECIFICATION FOR PACKAGE EQUIPMENT INSTRUMENTATION	
14.	BK1.BK10.BK10A-001-GE-AC7-SP-002	TECHNICAL SPECIFICATION FOR PAINTING	

Note: *Technical documents may be updated and complemented during bidding stage.*

Văn bản này được xác thực tại https://eoffice.vietsov.com.vn với số định danh: 13443/25-HSMT-PTM/BMĐH

BK-10A WELLHEAD PLAFORM

Approved By
Deputy General Director
"VIETSOVPETRO"

Signed by: Đặng Đức Phong
Date: 12/09/2025 08:27:46
Certified by: Vietsovpetro CA

DANG DUC PHONG

TECHNICAL EVALUATION CRITERIA
OIL DRAIN PUMP PACKAGE

DOC.NO	**:**	**OCD-BK10A-TE-06**
DATE	**:**	**09/2025**
REV	**:**	**0**

ISSUE FOR BID

Văn bản này được xác thực tại https://eoffice.vietsov.com.vn với số định danh: 13443/25-HSMT-PTM/BMĐH

Văn bản này được xác thực tại https://eoffice.vietsov.com.vn với số định danh: 13443/25-HSMT-PTM/BMĐH

Step 1: Evaluate compliance with prerequisites:

No	Criteria	Evaluation "Pass/ Fail"	Note
1	Goods must be brand new, unused.		
2	Year of manufacture: 2026 year or later.		
3	Warranty for the complete equipment shall be provided for a period of eighteen (**18**) months from the delivery date at Vietsovpetro's site or twelve (**12**) months after commissioning completion whichever comes first.		

Step 2: Offers that are evaluated as PASSING all the above prerequisites will be evaluated in step 2 - detailed evaluation according to the criteria in the following table:

Item according to rating levels			Evaluation Criteria	Offer content	Score			Reasons for score reduction for each item	Note
					Level I	Level II	Level III		
Level I	Level II	Level III			Point	%	%		
1	*2*	*3*	*4*	*5*	*6*	*7*	*8*	*9*	*10*
1			**General requirements for equipment** (Section 2 of Technical Requirement)		**3**				
	1.1			Bidders must clearly state the name, code/model, technical specifications, manufacturer and origin of Goods.		100			

Văn bản này được xác thực tại https://eoffice.vietsov.com.vn với số định danh: 13443/25-HSMT-PTM/BMĐH

	1.2			Not enough information as requirements		0			
2			**Technical Requirements** (Section 3 of Technical Requirement)		**35**				Note 1,2
	2.1			Fully comply as required in Technical Requirement.		100			
	2.2			Comply with minor concern but acceptable		60-90			
	2.3			Not comply		0			R
3			**Manufacturer** (Section 4 of Technical Requirement)		**10**				
	3.1			Comply as required in Recommended Vendor List		100			
	3.2			Manufacturer is not belongs to Recommended Vendor List but Bidder provides full information about Manufacturer's capacity, catalogs, profiles, contract providing equipment/system meets the requirement		20			
	3.3			Not belong to the cases above		0			
4			**Country of Origin** (Section 5 of Technical Requirement)		**20**				Note 3,4
	4.1			G7, Russia, EU, Australia, Korea, Malaysia, Singapore		100			

Văn bản này được xác thực tại https://eoffice.vietsov.com.vn với số định danh: 13443/25-HSMT-PTM/BMĐH

	4.2			The offered goods originate from Vietnam or from developed countries equivalent to or more developed than Vietnam		70			
	4.3			Other countries		10			
5			**Time and Location of Delivery** (Section 6 of Technical Requirement)		**10**				
	5.1			Comply as required in Technical Requirement		100			
	5.2			No later than 15 calendar days and delivery at Vietsovpetro Port/warehouse as required in Technical Requirement		50			
	5.3			Later than 15 calendar days or Not delivery at Vietsovpetro Port/warehouse as required in Technical Requirement		0			R
6			**Quantity and packaging** (Section 7 of Technical Requirement)		**2**				
	6.1			Comply as required in Technical Requirement		100			
	6.2			Not comply		0			
7			**Technical Documentation** (Section 8 of Technical Requirement)		**5**				

Văn bản này được xác thực tại https://eoffice.vietsov.com.vn với số định danh: 13443/25-HSMT-PTM/BMĐH

	7.1		Provide documents along with bid			60			
		7.1.1		Provide full documentation as required			100		
		7.1.2		Providing incomplete documents as requested but not affecting the assessment			70		
		7.1.3		Not provide documents as requested			0		R
	7.2		Providing technical documentation upon delivery			40			
		7.2.1		The Bidder commits to provide all documents as requested			100		
		7.2.2		Commit to provide documents, not fully as requested but does not affect the use of goods			70		
		7.2.3		Not commit to provide documents as requested			0		R
8			**Providing certificates of the goods** (Section 9 of Technical Requirement)		**10**				
	8.1			Bidder commits to provide all certificates upon delivery as required		100			
	8.2			There are changes in the form of the certificate but it still fully shows information about the origin or quality of the goods		60-90			

Văn bản này được xác thực tại https://eoffice.vietsov.com.vn với số định danh: 13443/25-HSMT-PTM/BMĐH

	8.3			Do not commit to providing 1 or several types of certificates		0			R
9			**Experience** (Section 10 of Technical Requirement)		**5**				
	9.1			Fully comply as required in Technical Requirement.		100			
	9.2			Not fully comply with the requirement but acceptable		60-90			
	9.3			Not comply		0			
10			**TOTAL SCORES (100 as maximum)**		**100**				

NOTES:

R: Reject

1. For this item is picked from each stated case that correspond to bidder's technical proposal.
2. a. Each "minor concern" shall be minus 10%. "Minor concern" is defined as not fully comply as required in Technical Requirement Document but acceptable (check for each statement of requirement).
   b. Each "Fully not comply" shall be minus 20%. "Fully not comply" is defined as completely not comply as required in Technical Requirement Document (check for each statement of requirement).
3. In case the bidder offers many origins for one item, Vietsovpetro will evaluate the item according to the origin with the lowest score.
4. During the Bid evaluation stage, for goods originating from countries in armed conflict, or being sanctioned or embargoed, from which the import of the goods may affect the contract performance and delivery schedule, explanations and commitments on the ability to deliver goods must be provided for the Procuring Entity to make evaluations.

Văn bản này được xác thực tại https://eoffice.vietsov.com.vn với số định danh: 13443/25-HSMT-PTM/BMĐH

Based on the actual situation at that time, the Procuring Entity has the right to review and decide to reject the bids, or not to continue the evaluation, if the Procuring Entity considers that there is any risks of failures in the contract performance and delivery schedule. In that case, the score of item 4 will be zero.

5. Technical Requirement for Oil Drain Pump Package is referred to Doc.No. OCD-BK10A-TR-06

Evaluation:

a. The offer is evaluated as PASS when it is evaluated as not violating any prerequisites, without any mandatory criteria (R) being evaluated as 0 points and has the minimum score of 80 points.
b. The offer is evaluated as FAIL when it is evaluated as violating 1 of prerequisites, or/and has 1 of mandatory criteria (R) being evaluated as 0 points or/and has the score lower than 80 points.

Văn bản này được xác thực tại https://eoffice.vietsov.com.vn với số định danh: 13443/25-HSMT-PTM/BMĐH

RESEARCH AND ENGINEERING INSTITUTE FOR OFFSHORE OIL AND GAS

PROJECT NAME : BK-10A WELLHEAD PLATFORM

DOCUMENT TITLE : PURCHASE REQUISITION FOR DRAIN PUMP

DOCUMENT NO. : BK1.BK10.BK10A-001-TS.BK10A-ME1-RQ-002

PHASE : DETAILED ENGINEERING

			Signed by: Lê Thị Hằng Date: 09/07/2025 07:56:37 Certified by: Vietsovpetro CA CONTROLLED	Signed by: Гайнутдинов Евгений Нурлыгалиевич Date: 09.07.2025 07:58:52 Certified by: Vietsovpetro CA	Signed by: Авдеев Андрей Сергеевич Date: 09.07.2025 11:19:55 Certified by: Vietsovpetro CA
			DC: L.T. HANG	**ENG.MGR: GAYNUTDINOV E.N.**	**PRO. MGR: AVDEEV A.S.**
			Signed by: Hoàng Văn Tiệp Date: 08/07/2025 16:52:31 Certified by: Vietsovpetro CA		Signed by: Trương Minh Đức Date: 08/07/2025 17:04:37 Certified by: Vietsovpetro CA
0	IFA	08.07.2025			
REV.	**DES.**	**DATE**	**PREPARED: H.V. TIEP**	**CHECKED: H.V. TIEP**	**DEPT.MGR: T.M. DUC**

Văn bản này được xác thực tại https://eoffice.vietsov.com.vn với số định danh: 684/25-TT-XDM/NIPI

TRACK CHANGES

No	Rev.	Content of Change	Note
1	0	Issued for Approval	

Văn bản này được xác thực tại https://eoffice.vietsov.com.vn với số định danh: 684/25-TT-XDM/NIPI

Table of Contents

1	**GENERAL**	**4**
1.1	Introduction	4
1.2	Purpose of document	4
2	**SCOPE OF SUPPLY**	**5**
2.1	Equipment / Materials	5
2.2	Items Included in VENDOR's Scope of Supply	5
3	**LIST OF PROJECT DOCUMENTS**	**5**
4	**DOCUMENTATION**	**6**

Văn bản này được xác thực tại https://eoffice.vietsov.com.vn với số định danh: 684/25-TT-XDM/NIPI

1 GENERAL

1.1 Introduction

BK-10A Wellhead Platform belongs to Vietsovpetro JV. It will be located in Block 09-1, White Tiger oil field, offshore the Socialist Republic of Vietnam.

BK-10A is connected with BK-10 by a linking bridge. BK-10A is an unmanned platform with 12 slots (03 spare slots) and will be remotely controlled from the host platform BK-10 via fiber optic cable.

There will be 09 production wells on BK-10A (02 wells will be converted into water injection wells in future as planned) and 03 wells can be added in the future.

Based on the criterion of the need for production and maximizing the return on investment, BK-10A will be considered to have the minimum facilities. The full well stream of BK-10A will be gathered together with the produced fluid of BK-10 and BK-1, preliminarily separated on BK-10 and then transferred to CPP-2.

The scope of this project is detailed engineering design for the BK-10A Wellhead Platform, Linking Bridge and modification of BK-10.

Location of BK-10A and related platforms as below.

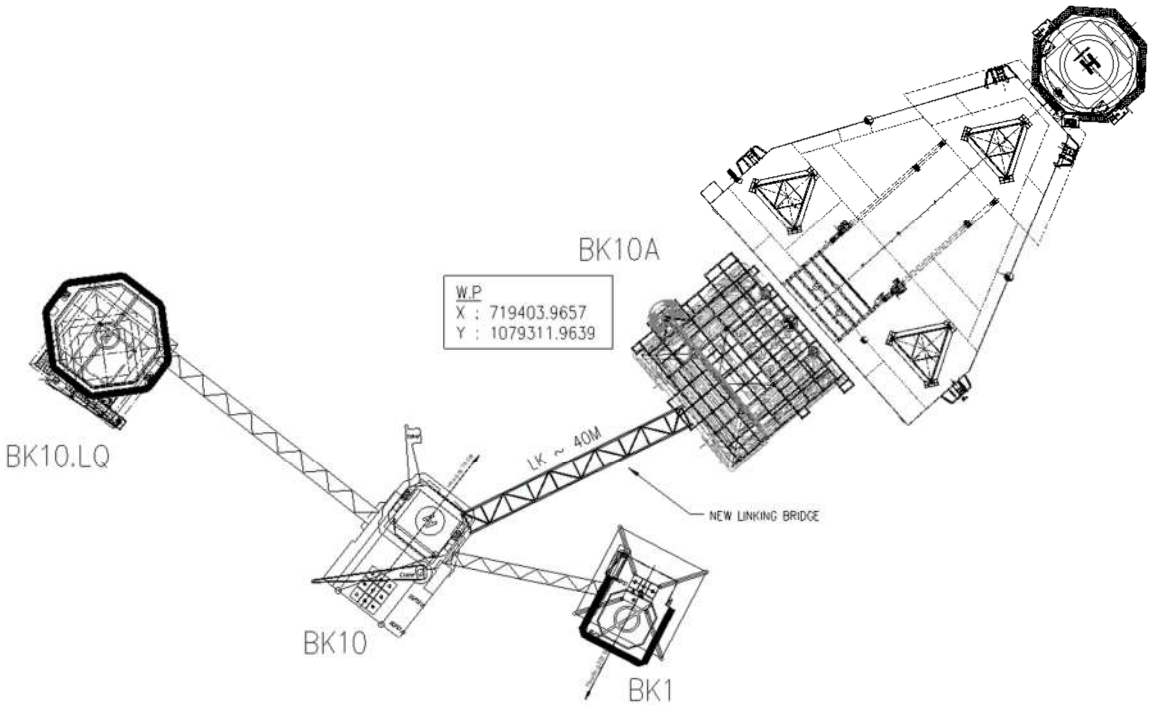

Figure 1: Location of the BK-10A Wellhead Platform and related platforms.

1.2 Purpose of document

This document, together with the datasheets and project documents, defines the requirements for supply, design, materials, fabrication, painting, inspection, testing, certification, preparation for shipment, delivery and documentation of Drain Pump as listed in the Scope of Supply.

Văn bản này được xác thực tại https://eoffice.vietsov.com.vn với số định danh: 684/25-TT-XDM/NIPI

2 SCOPE OF SUPPLY

2.1 Equipment / Materials

Equipment and Materials to be covered by this document are as listed in the table below:

Item No.	Tag No.	Description	Q'ty	Unit	Remarks
1	H-211	Drain Pump	01	set.	*Refer to the section 2.2*

2.2 Items Included in VENDOR's Scope of Supply

The Equipment and Materials shall include all items and requirement as specified in the equipment datasheets, specification and P&IDs referenced in the *Section 3 ''List of Project Documents''*

3 LIST OF PROJECT DOCUMENTS

This document is composed of the documents hereafter listed:

BK1.BK10.BK10A-001-TS.BK10A-ME1-DS-003	Datasheet for Drain Pump
BK1.BK10.BK10A-001-TS.BK10A-ME1-SP-003	Specification for Reciprocating Process Pumps
BK1.BK10.BK10A-001-TS.BK10A-PR1-PID-007	PID for Open, Closed Drain/Vent System
BK1.BK10.BK10A-001-TS.BK10A-PR1-CA-003	Drain Pump Sizing Calculation
BK1.BK10.BK10A-001-TS.BK10A-PI1-LD-001	BK10A - Equipment Layout Drawings
BK1.BK10.BK10A-001-GE-PI1-SP-001	Piping Material Class Specification
BK1.BK10.BK10A-001-GE-PI1-SP-002	Specification for Manual Valves
BK1.BK10.BK10A-001-GE-ES2-DS-006	Datasheet for LV Motors
BK1.BK10.BK10A-001-GE-ES2-SP-006	Specification for LV Motor
BK1.BK10.BK10A-001-GE-ES2-SP-008	Specification for Electrical Requirement for Package Equipment
BK1.BK10.BK10A-001-GE-IA2-SP-003	General Instrument Specification
BK1.BK10.BK10A-001-GE-IA2-SP-006	Specification for Package Equipment Instrumentation
BK1.BK10.BK10A-001-GE-AC7-SP-002	Technical Specification for Painting

Văn bản này được xác thực tại https://eoffice.vietsov.com.vn với số định danh: 684/25-TT-XDM/NIPI

4 DOCUMENTATION

As minimum, VENDOR shall be responsible for providing all documents/drawings as following:

No.	Description	With BID	After purchase order (For Review/ Information)	Final with Equipment Data book
1	List of vendor's documents and drawings		R	YES
2	Equipment list		R	YES
3	Pump datasheet	YES	R	YES
4	Performance Curve	YES	R	YES
5	Motor datasheet	YES	R	YES
6	General Arrangement Drawings	YES	R	YES
7	Cross section drawing			YES
8	Gear Reducer Drawing		R	YES
9	Pulsation Dampener Drawing		R	YES
10	Nameplate drawings		R	YES
11	Inspection and test plan		R	YES
12	Painting procedure		R	YES
13	FAT procedure		R	YES
14	Test reports: Hydrostatic test, Performance test, Mechanical running test, NPSH test, …		I	YES
15	Material test certificates		I	YES
16	Third-parties approval certificates		I	YES
17	Special tool list	YES	I	YES
18	List of spare parts for 2 years operation	YES	I	YES
19	Spare parts for start-up and commissioning	YES	I	YES

Văn bản này được xác thực tại https://eoffice.vietsov.com.vn với số định danh: 684/25-TT-XDM/NIPI

20	Lubricant list	YES	I	YES
21	General Catalogue	YES	I	YES
22	Installation, operating & maintenance manual	YES	I	YES
23	Vendor data book - VDB		I	YES

Văn bản này được xác thực tại https://eoffice.vietsov.com.vn với số định danh: 684/25-TT-XDM/NIPI

RESEARCH AND ENGINEERING
INSTITUTE FOR OFFSHORE OIL AND GAS

PROJECT NAME : BK-10A WELLHEAD PLATFORM

DOCUMENT TITLE : DATASHEET FOR DRAIN PUMP

DOCUMENT NO. : BK1.BK10.BK10A-001-TS.BK10A-ME1-DS-003

PHASE : DETAILED ENGINEERING

			Signed by: Lê Thị Hằng Date: 09/07/2025 07:56:37 Certified by: Vietsovpetro CA CONTROLLED	Signed by: Гайнутдинов Евгений Нурлыгалиевич Date: 09.07.2025 07:58:52 Certified by: Vietsovpetro CA	Signed by: Авдеев Андрей Сергеевич Date: 09.07.2025 11:19:56 Certified by: Vietsovpetro CA
			DC: L.T. HANG	**ENG.MGR: GAYNUTDINOV E.N.**	**PRO. MGR: AVDEEV A.S.**
0	IFA	08.07.2025		Signed by: Hoàng Văn Tiệp Date: 08/07/2025 16:52:31 Certified by: Vietsovpetro CA	Signed by: Trương Minh Đức Date: 08/07/2025 17:04:37 Certified by: Vietsovpetro CA
REV.	**DES.**	**DATE**	**PREPARED: H.V. TIEP**	**CHECKED: H.V. TIEP**	**DEPT.MGR: T.M. DUC**

Văn bản này được xác thực tại https://eoffice.vietsov.com.vn với số định danh: 684/25-TT-XDM/NIPI

TRACK CHANGES

No	Rev.	Content of Change	Note
1	0	Issued for Approval	

Văn bản này được xác thực tại https://eoffice.vietsov.com.vn với số định danh: 684/25-TT-XDM/NIPI

APPLICABLE TO: ● PROPOSAL ○ PURCHASE ○ AS BUILT

FOR — UNIT

SITE **BK10A WELLHEAD PLATFORM** — NO. OF PUMPS REQUIRED **01**

SERVICE **DRAIN SYSTEM** — SIZE AND TYPE **RECIPROCATING**

MANUFACTURER — SERIAL NO.

NOTE: ○ INDICATES INFORMATION TO BE COMPLETED BY PURCHASER — ☐ BY MANUFACTURER

GENERALS

NO. MOTOR DRIVEN **01** — OTHER DRIVER TYPE _____

PUMP ITEM NO'S **H-211** — PUMP ITEM NO'S _____

MOTOR ITEM NO'S _____ — DRIVER ITEM NO'S _____ — GEAR ITEM NO'S _____

MOTOR PROVIDED BY **PUMP VENDOR** — DRIVER PROVIDED BY _____ — GEAR PROVIDED BY _____

MOTOR MOUNTED BY _____ — DRIVER MOUNTED BY _____ — GEAR MOUNTED BY _____

MOTOR DATA SHEET NO. **BK1.BK10.BK10A-001-GE-ES2-DS-006** DRIVER DATASHEET NO. — GEAR DATASHEET NO.

OPERATING CONDITIONS (*NOTE 2*)

● CAPACITY @PT(m^3/h):

©MAXIMUM VISCOSITY **5.0** @ MINIMUM VISCOSITY **5.0**

● DISCHARGE PRESSURE (BARG):

MAXIMUM VTA MINIMUM **31**

● SUCTION PRESSURE (BARG):

MAXIMUM **2** MINIMUM **0**

© DIFFERENTIAL PRESSURE (BAR):

MAXIMUM VTA MINIMUM VTA

● NPSH AVAILABLE (m) WITHOUT ACCELERATION HEAD ***NOTE 2***

● ACCELERATION HEAD (APP G) ***NOTE 2*** NET

☐ PERFORMANCES

☐ RATED CAPACITY (m^3/h) ----------

☐ NPSH REQUIRED (m) ----------

☐ PISTON SPEED (m/h) ----------

☐ DISPLACEMENT(m^3/h) ----------

☐ VOLUMETRIC EFFICIENCY (%) ----------

☐ MECHANICAL EFFICIENCY (%) _____

☐ kW@ MAXIMUM VISCOSITY ----------

☐ kW@ RELIEF VALVE SETTING _____

☐ MAXIMUM ALLOWABLE SPEED (RPM)----------

☐ MINIMUM ALLOWABLE SPEED (RPM) _____

☐ PINION SHAFT (RPM)----------

☐ HYDRAULIC kW---------- BRAKE kW ----------

FOR DIRECT-ACTING PUMPS:

○ DRIVE GAS _____

○ GOVERNOR TYPE _____

○ INLET PRESSURE (kPa)(BARG) ----------

○ INLET TEMPERATURE (C) _____

○ EXHAUST PRESSURE (kPa)(BARG)----------

☐ STALL PRESSURE (kPa)(BARG) _____

☐ GAS CONSUMPTION (kg/kW-h)

LIQUID (*NOTE 2*)

● TYPE OR NAME OF LIQUID **HC LIQUID / WATER**

● PUMPING TEMPERATURE (°C): COMPRESSIBILITY %

MINIMUM **21** ºC NORMAL **45** ºC MAXIMUM **55** ºC

● SPECIFIC GRAVITY: MINIMUM **0.817** MAXIMUM **1.004**

○ SPECIFIC HEAT: _____ Cp (kJ/kg °C)

● VISCOSITY (cP): MINIMUM **0.79** MAXIMUM **4.64**

○ CORROSIVE/EROSIVE AGENTS _____

○ CHLORIDE CONCENTRATION (PPM) _____

○ H_2S CONCENTRATION (PPM) _____

LIQUID ○ TOXIC ● FLAMMABLE ○ OTHER _____

○ SITE AND UTILITY DATA

LOCATION ○INDOOR ●OUTDOOR

○ HEATED ○ UNHEATED ● UNDER ROOF

ELECTRICAL AREA CLASS **T3** GROUP **IIA** ZONE **2**

○ WINTERIZATION REQ'D ● TROPICALIZATION REQ'D

SITE DATA

○ RANGE OF AMBIENT TEMPS: MIN/MAX **21/39** °C.

UNUSUAL CONDITIONS

○ DUST ○FUMES ● SALT ATMOSPHERE

● OTHER **OFFSHORE**

○ UTILITY CONDITIONS

ELECTRICITY	DRIVERS	HEATING	CONTROL	SHUTDOWN
VOLTAGE	**380**	**220**	_____	_____
HERTZ	**50**	**50**	_____	_____
PHASE	**3**	**1**	_____	_____

COOLING WATER INLET RETURN DESIGN MAX A

TEMP °C _____ MAX _____

PRESS. (kPa)(BARG) MIN ----------

SOURCE ----------

INSTRUMENT AIR MAX MIN

PRESSURE (BARG)

APPLICABLE SPECIFICATIONS

API 674 POSITIVE DISPLACEMENT PUMPS - RECIPROCATING

SPECIFICATION FOR RECIPROCATING PROCESS PUMPS (DOC. No. BK1.BK10.BK10A-001-TS.BK10A-ME1-SP-003)

Văn bản này được xác thực tại https://eoffice.vietsov.com.vn với số định danh: 684/25-TT-XDM/NIPI

☐ CONSTRUCTION

LIQUID END: (2.7.1.1 THROUGH 2.7.1.4)

☐ SIMPLEX ☐ MULTIPLEX ■ PLUNGER

☐ DUPLEX ☐ NO. OF CYLINDERS ☐ PISTON

■ SINGLE ACTING ■ HORIZONTAL ☐ REMOVABLE LINERS

☐ DOUBLE ACTING ☐ VERTICAL ☐ NO LINERS

VALVES PER CORNER:

	NUMBER	AREA (mm^2)	VELOCITY (m/h)
SUCTION			
DISCHARGE			

VALVE TYPE: ☐ DISC WING ☐ DOUBLE PORTED ☐ BALL

NOZZLES	SIZE	ANSI RATING	FACING	LOCATION
LIQUID SUCTION	*NOTE 2*		RF	
LIQUID DISCHARGE	*NOTE 2*		RF	
GAS INLET				
GAS EXHAUST				
GLAND FLUSH				
DRAINS				
OTHER				
OTHER				
OTHER				

☐ MATERIALS

PART	LIQUID END	ASTM NO.	GAS END
CYLINDER	SS316		
LINER			
PISTON OR PLUNGER	SS316 (HARD-COATED)		
PISTON RINGS			
PISTON ROD			
VALVES/VALVE SEATS			
GLAND			
THROAT BUSHING			
PACKING			
LANTERN RING			
BOLTING			
OTHER			
OTHER			

LIQUID END LUBRICATION

○ PACKING LUBE VTA

○ FLUSH SOURCE VTA

☐ LUBRICATOR MAKE

SIZE. NO. OF FEEDS

☐ PACKING

	LIQUID END	GAS END	VALVE ROD
NO. OF RINGS		----------	----------
SIZE OF RINGS	----------	----------	----------
OTHER			

☐ PRESSURE RATINGS

	LIQUID CYLINDER	GAS CYLINDER
MAXIMUM PRESSURE (kPa)(BARG)		
MAXIMUM TEMPERATURE (C)		
HYDROSTATIC TEST PRESS. (kPa)(BARG)		
OTHER		

QA INSPECTION AND TEST

- ● COMPLIANCE WITH INSPECTORS CHECK LIST
- ● CERTIFICATION OF MATERIALS
- ● FINAL ASSEMBLY CLEARANCES
- ● SURFACE AND SUBSURFACE EXAMINATIONS
  - ● RADIOGRAPHY
  - ● ULTRASONIC
  - ● MAGNETIC PARTICLE
  - ● LIQUID PENETRANT
- ● CLEANLINESS PRIOR TO FINAL ASSEMBLY
- ○ HARDNESS OF PARTS, WELDS & HEAT AFFECTED ZONES
- ● FURNISH PROCEDURES FOR OPTIONAL TESTS

TESTS	REQ'D	W/T	OBS
HYDROSTATIC	○	●	○
PERFORMANCE	○	●	○
NPSH (IF APPLICABLE)	●	○	○
OTHER	●	○	○

DRIVE MECHANISM

○ DIRECT COUPLED ○ V-BELT OR COG ● GEAR

☐ COUPLING MANUFACTURER

○ SOLEPLATES ● BASEPLATE ○ SKID

● BY PUMP MANUFACTURER SUITABLE FOR EPOXY GROUT

● EXTENDED FOR: **PUMP, TRANSMISSION, MOTOR…**

○ SUBPLATES BY PUMP MANUFACTURER

○ DRAIN-RIM ● DRAIN-PAN

○ LEVELING PADS ○ SUITABLE FOR COLUMN MOUNTING

REMARKS

Văn bản này được xác thực tại https://eoffice.vietsov.com.vn với số định danh: 684/25-TT-XDM/NIPI

☐ **POWER FRAME**

MAXIMUM FRAME RATING:

_____ kW@_____rpm

MAXIMUM PRESSURE RATING (kPa)(BARG)

CRANK SHAFT MATERIAL

NO. OF MAIN BEARINGS _____

TYPE OF MAIN BEARINGS _____

INTERNAL GEARS ☐YES ☐NO

GEAR RATIO _____

GEAR SERVICE FACTOR _____

POWER END LUBRICATION: VTA

TYPE ○SPLASH ○POSITIVE PRESSURE ○GRAVITY

OIL PUMP:

MAIN _____

○ AUXILIARY _____

○ DRIVEN BY _____

OIL FILTER:

TYPE ○MAKE

☐ FILTRATION SIZE _____ ○MODEL _____

○ OIL COOLER

TYPE _____

SIZE

DRIVERS

● MOTOR ***NOTE 3***

☐ MANUFACTURER

☐ TYPE _____

☐ FRAME NO. _____

● CONSTANT SPEED _____

○ VARIABLE SPEED_____

☐ kW RPM

● VOLTS **380** PHASE **3**

● HERTZ **50** SERVICE FACTOR **1.15**

● ENCLOSURE **IP-56**

● INSULATION CLASS/TEMP RISE **F/B**

● STARTING METHOD: **DIRECT ON LINE**

● ANTI CONDENSATION: **220VAC, 1 PHASE**

GEAR REDUCER

● REQUIRED _____

☐ MANUFACTURER _____

☐ MODEL

☐ TYPE _____

☐ SERVICE FACTOR

☐ RATING

V-BELT OR CHAIN DRIVE

○ REQUIRED

☐ NO. OF BELTS _____

☐ SIZE OF BELTS _____

☐ CHAIN DETAILS

○ TOTALLY ENCLOSED GUARD ----------

○ SLIDE RAILS FOR ADJUSTMENT----------

CONTROLS

TYPE: **SIGNAL:**

●MANUAL ● REMOTE ○PNEUMATIC

●AUTOMATIC ● LOCAL ●ELECTRONIC

CAPACITY CONTROL:

○ FLOW BYPASS ONLY ○ VARIABLE SPEED ONLY ○ COMBINATION

○ VENDOR FURNISHES CS GOVERNOR & VALVE

○ VENDOR TO FURNISH CONTROL PANEL

○ FREESTANDING ○ ON UNIT ○ OTHER ----------

○ TACHOMETER REQUIRED ○ TYPE

OTHER PURCHASE REQUIREMENTS

NAMEPLATE UNITS ○ CUSTOMARY ● SI

○ VENDOR FURNISHED PROCESS PIPING _____

_____

○ VENDOR REVIEW PIPING DRAWINGS

● VENDOR FURNISHED PULSATION SUPPRESSION DEVICES (***NOTE 4***)

○ VENDOR FURNISHED RELIEF VALVE

○ INTERNAL ●EXTERNAL

○ RELIEF VALVE SETTING

○ LIQUID-FILLED PRESSURE GAUGES REQUIRED

● TECHNICAL DATA MANUAL REQUIRED

● MAXIMUM SOUND PRESSURE LEVEL **85** dBA @ **1m**

○ OVERSIZE NOZZLE MATING PARTS BY VENDOR

○ QUENCH-TYPE GLANDS REQUIRED

● PROVIDE PACKING COLLECTION CHAMBER

● PROVIDE LANTERN RING PURGE

☐ SIZE _____

○ OIL HEATER CONNECTION REQUIRED

DISTANCE PIECE COVERS

○ SAFETY GUARDS ○ LOUVERED WEATHER COVERS ● SOLID COVERS

ADDITIONAL OIL SYSTEM ITEMS

○ FLOW INDICATOR ○ PRESSURE GAUGES ○ TEMPERATURE GAUGES

○ STRAINER ○ OTHER

OIL HEATER REQUIRED

○ STEAM ○ ELECTRIC

○ MECHANICAL LUBRICATOR REQUIRED

MINIMUM DESIGN METAL TEMPERATURE _°C

GEARS COMPLY WITH ○ API 613 ● API 677

○ API 671 COUPLINGS AND GAUGES REQUIRED_____

PREPARATION FOR SHIPMENT

○ DOMESTIC ● EXPORT ○ EXPORT BOXING

○ OUTDOOR STORAGE MORE THAN 6 MONTHS

WEIGHTS (kg)

☐ PUMP_____ ☐BASE____ ☐ GEAR_____ ☐DRIVER_____

Notes:

1. VTA – Vendor To Advise

   VTC – Vendor To Confirm

2. Process data shall be taken in the documents:

- *Drain Pump Sizing Calculation (BK1.BK10.BK10A-001-TS.BK10A-PR1-CA-003)*
- *P&ID for Open, Closed Drain/Vent System (BK1.BK10.BK10A-001-TS.BK10A-PR1-PID-007).*

3. Electric motor shall be in accordance with *Specification for LV Motor (BK1.BK10.BK10A-001-GE-ES2-SP-006) and Datasheet for LV Motors (BK1.BK10.BK10A-001-GE-ES2-DS-006).*

Văn bản này được xác thực tại https://eoffice.vietsov.com.vn với số định danh: 684/25-TT-XDM/NIPI

4. *Pulsation Dampener connection type shall be flanged, branch pipe as shown in the P&ID for Open, Closed Drain/Vent System (BK1.BK10.BK10A-001-TS.BK10A-PR1-PID-007).*

Văn bản này được xác thực tại https://eoffice.vietsov.com.vn với số định danh: 684/25-TT-XDM/NIPI

RESEARCH AND ENGINEERING INSTITUTE FOR OFFSHORE OIL AND GAS

PROJECT NAME : **BK-10A WELLHEAD PLATFORM**

DOCUMENT TITLE : **SPECIFICATION FOR RECIPROCATING PROCESS PUMPS**

DOCUMENT NO. : **BK1.BK10.BK10A-001-TS.BK10A-ME1-SP-003**

PHASE : **DETAILED ENGINEERING**

Applied Document	VSP-NIPI-TYP-TS-ME1-SP-11	Rev.	0

			Signed by: Lê Thị Hằng Date: 30/06/2025 10:43:09 Certified by: Vietsovpetro CA	Signed by: Гайнутдинов Евгений Нурлыгалиевич Date: 30.06.2025 12:14:41 Certified by: Vietsovpetro CA	Signed by: Авдеев Андрей Сергеевич Date: 30.06.2025 12:19:25 Certified by: Vietsovpetro CA
			DC: L.T. HANG	**ENG.MGR: GAYNUTDINOV E.N.**	**PRO. MGR: AVDEEV A.S.**
			Signed by: Hoàng Văn Tiệp Date: 27/06/2025 15:33:00 Certified by: Vietsovpetro CA		Signed by: Trương Minh Đức Date: 27/06/2025 16:06:44 Certified by: Vietsovpetro CA
0	IFA	27.06.2025			
REV.	**DES.**	**DATE**	**PREPARED: H.V. TIEP**	**CHECKED: H.V. TIEP**	**DEPT.MGR: T.M. DUC**

CONTROLLED

Văn bản này được xác thực tại https://eoffice.vietsov.com.vn với số định danh: 646/25-TT-XDM/NIPI

TRACK CHANGES

No	Rev.	Content of Change	Note
1	0	Issued for Approval	

Văn bản này được xác thực tại https://eoffice.vietsov.com.vn với số định danh: 646/25-TT-XDM/NIPI

Table of Contents

1 INTRODUCTION 4

2 ADDENDUM 5

Văn bản này được xác thực tại https://eoffice.vietsov.com.vn với số định danh: 646/25-TT-XDM/NIPI

1 INTRODUCTION

BK-10A Wellhead Platform belongs to Vietsovpetro JV. It will be located in Block 09-1, White Tiger oil field, offshore the Socialist Republic of Vietnam.

BK-10A is connected with BK-10 by a linking bridge. BK-10A is an unmanned platform with 12 slots (03 spare slots) and will be remotely controlled from the host platform BK-10 via fiber optic cable.

There will be 09 production wells on BK-10A (02 wells will be converted into water injection wells in future as planned) and 03 wells can be added in the future.

Based on the criterion of the need for production and maximizing the return on investment, BK-10A will be considered to have the minimum facilities. The full well stream of BK-10A will be gathered together with the produced fluid of BK-10 and BK-1, preliminarily separated on BK-10 and then transferred to CPP-2.

The scope of this project is detailed engineering design for the BK-10A Wellhead Platform, Linking Bridge and modification of BK-10.

Location of BK-10A and related platforms as below.

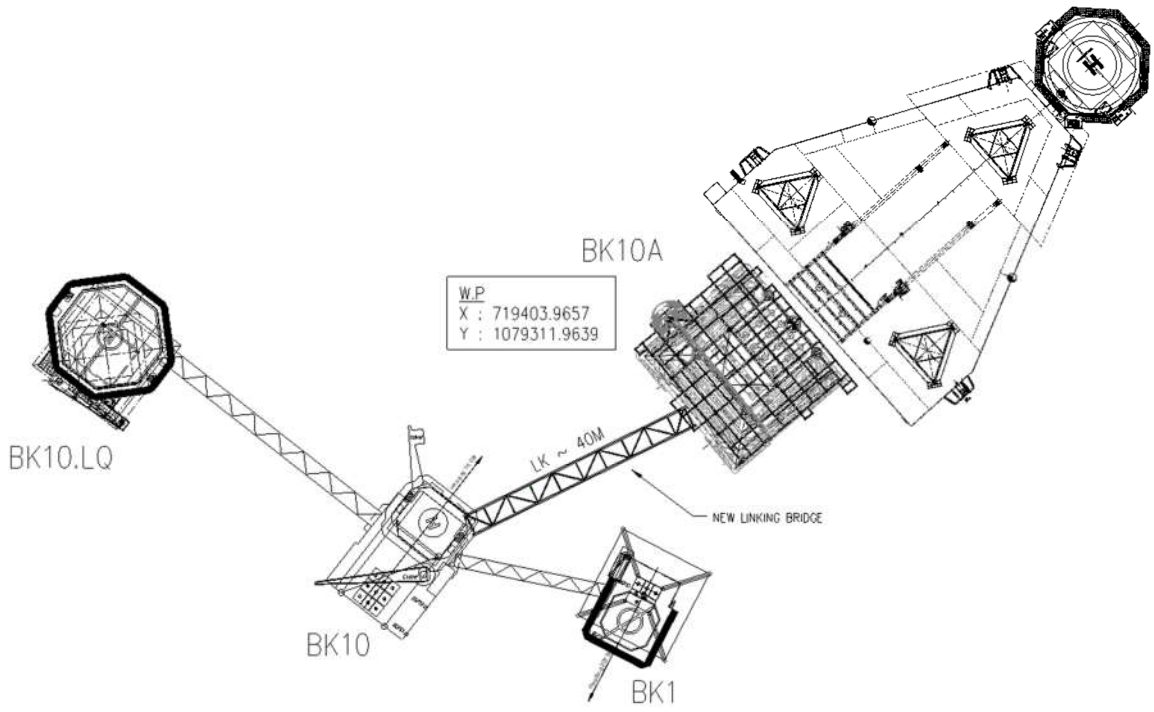

Figure 1: Location of the BK-10A Wellhead Platform and related platforms.

Văn bản này được xác thực tại https://eoffice.vietsov.com.vn với số định danh: 646/25-TT-XDM/NIPI

2 ADDENDUM

This document uses the Typical Engineering Documentation for this Project. However, some design intends or requirements may require to be revised to fit with Project's purpose. This section lists changes in the applied typical documents, originating in Typical Engineering Documentation for any reason including those indicated in Table 1. These changes are identified in this Addendum to the applied typical document, identifying the document and section affected and the required change.

VENDOR shall review the required changes in conjunction with the referenced document and project's engineering documents.

The type of modification shall be defined and indicated in subsequent text as follows:

- ✓ "ADD" - Indicates the following statement(s) is/are added to the Company referenced text.
- ✓ "DELETE" - Indicates the following statement(s) is/are deleted from the Company referenced text.
- ✓ "REPLACE WITH" - Indicates the following statement(s) is/are revision(s) to the Company referenced text.

Table 1: List of changes compared Typical Specification

Section	Current Statement or Requirement	Revised to
2.2	VSP-NIPI-TYP-TS-PI1-SP-01 VSP-NIPI-TYP-TS-PI1-SP-02 VSP-NIPI-TYP-TS-ES2-SP-10 VSP-NIPI-TYP-TS-ES2-SP-08 VSP-NIPI-TYP-TS-IA2-SP-03 VSP-NIPI-TYP-TS-IA2-SP-06 VSP-NIPI-TYP-GE-AC7-SP-01 & VSP-NIPI-TYP-GE-AC7-SCH-01	REPLACE WITH: BK1.BK10.BK10A-001-GE-PI1-SP-001 BK1.BK10.BK10A-001-GE-PI1-SP-002 BK1.BK10.BK10A-001-GE-ES2-SP-008 BK1.BK10.BK10A-001-GE-ES2-SP-006 BK1.BK10.BK10A-001-GE-IA2-SP-003 BK1.BK10.BK10A-001-GE-IA2-SP-006 BK1.BK10.BK10A-001-GE-AC7-SP-002
12	VENDOR shall provide guarantee for the complete equipment for a period of 12 months from start-up but not exceeding 18 months from receiving goods at the COMPANY's yard.	DELETE

Văn bản này được xác thực tại https://eoffice.vietsov.com.vn với số định danh: 646/25-TT-XDM/NIPI

VIETSOVPETRO

RESEARCH AND ENGINEERING INSTITUTE FOR OFFSHORE OIL AND GAS

VIETSOVPETRO
RESEARCH & ENGINEERING INSTITUTE

AGREED BY
Deputy General Director of Vietsovpetro

Tran Xuan Hoang

07/04/2020

APPROVED BY
Chief Engineer of Vietsovpetro

LIÊN DOANH VIỆT - NGA VIETSOVPETRO

Tran Van Vinh

/2020

TYPICAL ENGINEERING DOCUMENTATION

DOCUMENT TITLE : SPECIFICATION FOR RECIPROCATING PROCESS PUMPS

DOCUMENT NO. : VSP-NIPI-TYP-TS-ME1-SP-11

AGREED:	Name	Date
Material and Equipment Department		
Capital Construction Department		20/03/20
Mechanical and Energy Division		7.2.20

CONTROLLED

REV.	DES.	DATE	PREPARED	CHECKED	DEPART. MANAGER	ENG. MANAGER	PRO. MANAGER
0	IFA	14/01/2020	H.V. TIEP	H.V. TIEP T.N. BINH	N.T. HAI T.H. TOAI	T.D. HAI	B.T. HAN

Văn bản này được xác thực tại https://eoffice.vietsov.com.vn với số định danh: 646/25-TT-XDM/NIPI

Change Log

REV	SECTION	PAGE	CHANGE DESCRIPTION

Reference Documents:

Document Number	Document Title
VSP-NIPI-TYP-GE-AC7-SP-01	Painting Specification for Platform
VSP-NIPI-TYP-GE-AC7-SCH-01	Basic Painting Schedules for Platform
VSP-NIPI-TYP-TS-PI1-SP-01	Piping Material Class Specification
VSP-NIPI-TYP-TS-PI1-SP-02	Specification for Manual Valves
VSP-NIPI-TYP-TS-IA2-SP-03	General Instrument Specification
VSP-NIPI-TYP-TS-IA2-SP-06	Specification for Package Equipment Instrumentation
VSP-NIPI-TYP-TS-ES2-SP-10	Specification for Electrical Requirement for Package Equipment
VSP-NIPI-TYP-TS-ES2-SP-08	Specification for LV Motor

Văn bản này được xác thực tại https://eoffice.vietsov.com.vn với số định danh: 646/25-TT-XDM/NIPI

TABLE OF CONTENTS

1.	**INTRODUCTION**	**5**
1.1	Project description	5
1.2	Purpose of document	5
1.3	Acronyms and Abbreviations	5
1.4	Definitions	6
1.5	Order of Precedence	6
2.	**GENERAL REQUIREMENTS**	**7**
2.1	Applicable Codes and Standards	7
2.2	Company Specifications	8
2.3	Vendor's Responsibility	8
2.4	Operation and Design Life	8
2.5	Location and Environmental Conditions	8
2.6	Units	9
2.7	Weight Control	9
2.8	Language	9
2.9	VENDOR Exceptions	9
3.	**SCOPE**	**10**
3.1	Scope of Supply	10
3.2	Scope of Work	10
4.	**TECHNICAL REQUIREMENTS**	**11**
4.1	General	11
4.2	Mechanical	11
4.3	Material	12
4.4	Electrical Requirements	12
4.5	Instrumentation Requirements	12
4.6	Piping Requirements	13
4.7	Layout Requirements	13
4.8	Noise and Vibration	13
4.9	Utilities	14
5.	**FABRICATION REQUIREMENTS**	**14**
6.	**INSPECTION AND TESTING REQUIREMENTS**	**14**
6.1	General	14
6.2	Certification	14
6.3	Inspection	14

Văn bản này được xác thực tại https://eoffice.vietsov.com.vn với số định danh: 646/25-TT-XDM/NIPI

6.4	Shop/Factory Tests	15
6.5	Site Test	15
7.	**PROTECTIVE COATING**	**15**
8.	**MARKING**	**15**
9.	**SPECIAL TOOLS**	**16**
10.	**SPARES**	**16**
11.	**PREPARATION FOR SHIPMENT**	**16**
12.	**WARRANTY**	**17**
13.	**DOCUMENTATION**	**17**

Văn bản này được xác thực tại https://eoffice.vietsov.com.vn với số định danh: 646/25-TT-XDM/NIPI

1. INTRODUCTION

1.1 Project description

1.1.1 The typical engineering documentation is a set of engineering documents issued by Research and Engineering Institute (REI) that can be applied repeatedly for many projects that REI involves.

1.1.2 The typical engineering documentation shall be agreed by related departments in Vietsovpetro and approved by Vietsovpetro, if any.

1.2 Purpose of document

This document in conjunction with the respective datasheets, P&ID and other project specifications defines the minimum requirements for design, materials, fabrication, inspection, testing, painting, preparation for shipment, documentation for Reciprocating Process Pumps *(the following is abbreviated as Reciprocating Pumps).*

The VENDOR shall ensure that all equipment and services supplied meet the requirements of this specification, the project data sheets, Codes & Standards and specifications nominated herein.

1.3 Acronyms and Abbreviations

AISC	American Institute for Steel Construction
API	American Petroleum Institute
ASME	American Society of Mechanical Engineers
EEMUA	Engineering Equipment & Material Users' Association
EN	European Standard
FAT	Factory Acceptance Test
IOM	Installation, Operation, and Maintenance
ISO	International Organization for Standardization
ITP	Inspection and Test Plan
LV	Low Voltage
MAWP	Maximum Allowable Working Pressure
NDE	Non Destructive Examination
NPSH	Net Positive Suction Head
NPSHa	Net Positive Suction Head Available
NPSHr	Net Positive Suction Head Required
P&ID	Piping and Instrumentation Diagram
SAT	Site Acceptance Test
SI	International System of Units
TPI	Third Party Inspector

Văn bản này được xác thực tại https://eoffice.vietsov.com.vn với số định danh: 646/25-TT-XDM/NIPI

1.4 Definitions

COMPANY	Joint Venture Vietsovpetro
VENDOR	The person, group, or organization responsible for the design, manufacture, testing, and load-out/shipping of the Equipment.
Third Party Inspector (TPI)	Independent International Certification agency like DNV-GL, ABS etc. approved by COMPANY shall be employed by VENDOR to perform design appraisals and manufacturing surveillance activities at VENDOR's work with respect to the subject work/supply on behalf of the COMPANY.
ASME Inspector (AI)	Inspector as defined in UG-91 of ASME Section VIII Division 1.
Skid	A piece of equipment (*pump, motor and accessories*) with all interconnecting piping and wiring installed for connecting to utility and process systems
Shall	Indicates mandatory requirement.
Should	Indicates preferred course of action
May	Indicates possible course of action
Will	Indicated an intention of action

1.5 Order of Precedence

1.5.1 It is the responsibility of the VENDOR to bring to the attention of the COMPANY any conflicts between the applicable documents. In the case of conflict in the requirements, intent or interpretation of the various codes, standards and regulations the most stringent shall apply.

1.5.2 The general order of precedence for the documents, standards and specifications shall be as listed below:

a) Mandatory local laws and regulations
b) Purchase Order
c) Equipment datasheets
d) P&ID
e) This specification
f) Project specifications
g) International codes and standards
h) Standard industry practice

Văn bản này được xác thực tại https://eoffice.vietsov.com.vn với số định danh: 646/25-TT-XDM/NIPI

2. GENERAL REQUIREMENTS

2.1 Applicable Codes and Standards

Reciprocating Pumps shall be in accordance with the latest edition of the following international codes and standards including any addenda published for the edition. These shall include but not be limited to the following:

API 674	Positive Displacement Pumps – Reciprocating
AISC	American Institute for Steel Construction
ASME B16.5	Pipe Flanges and Flanged Fittings – NPS ½ Through NPS 24 Metric/Inch Standard
ASME BPVC Section V	Non-Destructive Examination
ASME BPVC Section VIII Division 1	Rules for Construction of Pressure Vessels
ASME BPVC Section IX	Welding and Brazing Qualifications
EEMUA 140	Noise Procedures Specification
EN 10204	Metallic Products – Types of Inspection Documents
ISO 14691	Petroleum, Petrochemical and Natural Gas Industries – Flexible Couplings for Mechanical Power Transmission – General Purpose Applications
ISO 1940-1	Mechanical Vibration –Balance Quality Requirement for Rotors in a Constant (Rigid) State. Part 1: Specification and Verification of Balance Tolerances
ISO 9001	Quality Assurance Systems
API 674	Positive Displacement Pumps – Reciprocating
AISC	American Institute for Steel Construction
ASME B16.5	Pipe Flanges and Flanged Fittings – NPS ½ Through NPS 24 Metric/Inch Standard
ASME BPVC Section VIII Division 1	Rules for Construction of Pressure Vessels
ASME BPVC Section V	Non-Destructive Examination
ASME BPVC Section IX	Welding and Brazing Qualifications
EEMUA 140	Noise Procedures Specification

Văn bản này được xác thực tại https://eoffice.vietsov.com.vn với số định danh: 646/25-TT-XDM/NIPI

EN 10204	Metallic Products – Types of Inspection Documents
ISO 14691	Petroleum, Petrochemical and Natural Gas Industries – Flexible Couplings for Mechanical Power Transmission – General Purpose Applications
ISO 1940-1	Mechanical Vibration –Balance Quality Requirement for Rotors in a Constant (Rigid) State. Part 1: Specification and Verification of Balance Tolerances
ISO 9001	Quality Assurance Systems

2.2 Company Specifications

VSP-NIPI-TYP-GE-AC7-SP-01	Painting Specification for Platform
VSP-NIPI-TYP-GE-AC7-SCH-01	Basic Painting Schedules for Platform
VSP-NIPI-TYP-TS-PI1-SP-01	Piping Material Class Specification
VSP-NIPI-TYP-TS-PI1-SP-02	Specification for Manual Valves
VSP-NIPI-TYP-TS-IA2-SP-03	General Instrument Specification
VSP-NIPI-TYP-TS-IA2-SP-06	Specification for Package Equipment Instrumentation
VSP-NIPI-TYP-TS-ES2-SP-10	Specification for Electrical Requirement for Package Equipment
VSP-NIPI-TYP-TS-ES2-SP-08	Specification for LV Motor

2.3 Vendor's Responsibility

The Vendor shall full responsibility for design, selection of materials (when specified), fabrication, testing and inspection of Reciprocating Pumps based on relevant project documents. Review of Vendor documents or inspection by the COMPANY shall not relieve the VENDOR of any of these responsibilities.

2.4 Operation and Design Life

Unless otherwise specified, the Reciprocating Pumps shall be designed for a minimum service life of 25 years.

2.5 Location and Environmental Conditions

The equipment will be installed on an offshore platform in the south of the coast of Vietnam.

Ambient Temperature (min./max.), ^{0}C:	21.0/ 39.0
Relative Humidity (min./max.), %:	60.3/ 98.2
Maximum wind speed (3 sec gust), m/s	34.2
Design wind speed, m/s	34.2
Earthquake acceleration	0.04g

Văn bản này được xác thực tại https://eoffice.vietsov.com.vn với số định danh: 646/25-TT-XDM/NIPI

2.6 Units

SI unit shall be used for the project with certain exceptions where oil-field units are to be adopted.

2.7 Weight Control

The VENDOR shall exercise an active weight control system throughout the design and fabrication of the equipment. The VENDOR shall submit an Equipment Weight Data with weights (dry, test, operating, lift, etc.) and center of gravity information including a sketch (footprint size of skid and height)

2.8 Language

The language of all documents and drawings shall be English.

2.9 VENDOR Exceptions

2.9.1 The VENDOR shall be responsible for the submission, within the quotation, of a complete list of any exceptions or deviations to this specification or any other document listed herein or within the purchase order. Should the VENDOR take no exceptions to any of the applicable documents a clear statement of full compliance shall be included in the quotation.

2.9.2 In absence of such deviation list, it shall be considered that the quotation is in full compliance with the requisition documents and subsequent extra claims arising due to not considering the requirements stated shall not be considered.

Văn bản này được xác thực tại https://eoffice.vietsov.com.vn với số định danh: 646/25-TT-XDM/NIPI

3. SCOPE

3.1 Scope of Supply

The VENDOR's scope of supply for Reciprocating Pump shall include the following as a minimum:

- Reciprocating pump per API 674;
- Electric motor driver with terminal boxes;
- Gear box, if required;
- Flexible spacer drive coupling
- Non-sparking guards around exposed rotating surfaces
- Mechanical seal or packing assembly, as applicable;
- Lubrication system;
- On-skid inter-connecting piping for the package piped to the skid edge terminated with a flange
- All instrumentation and control equipment as specified in the equipment datasheets and indicated on the P&ID's within the package limit.
- Suction and discharge pulsation dampeners (Loose supply);
- All loose supplied items as specified on datasheet and P&IDs;
- Fabricated steel base plate complete with lifting lugs, earthing bosses, drain point termination and drip pan;
- Foundation bolts with nuts;
- Stainless steel SS316 nameplate;
- Special tools for installation, maintenance and operation including nitrogen charging kit for dampeners.
- Spare parts for start up, pre-commissioning and commissioning;
- Spares parts for 2 years of operation (Optional);
- Lifting equipment such as lifting beams, slings, shackles etc. VENDOR to provide complete list of such tools and tackles with necessary 3rd party certificates. (Optional)

3.2 Scope of Work

The VENDOR's scope of work for package shall include following as a minimum:

- Inspection and Testing, as per ITP and various API/ ISO standards including factory acceptance test and string test at VENDOR shop.
- Provide necessary certification from TPI for design verification, material, fabrication and testing as per requisition for the complete package.
- VENDOR documentation including special submission to Vietnamese local authorities, including IOM manuals, certification dossiers and vendor data book in native, pdf format and hard copies as specified in the Purchase Order and this specification.
- Necessary supervision of erection and commissioning at fabrication yard/offshore. (Per Diem rates and expected duration of fabrication yard/offshore work to be informed in offer.)
- Surface preparation and painting.
- Export sea-worthy packing and long term storage, with fumigation and fumigation certificates.

Văn bản này được xác thực tại https://eoffice.vietsov.com.vn với số định danh: 646/25-TT-XDM/NIPI

- Transportation / loading as per requisition.

4. TECHNICAL REQUIREMENTS

4.1 General

The Reciprocating Pump shall be supplied, designed, fabricated, inspected, tested, preserved, packed and delivered in accordance with this specification, API 674 and datasheets.

The Reciprocating Pump shall be designed and constructed for a minimum service life of 25 years and at least 3 years of uninterrupted operation.

The Reciprocating Pump shall be designed and constructed to meet safely all specified process operating conditions and transient operations like start-up, normal and emergency shut-down.

The Reciprocating Pump and their auxiliaries shall be manufactured according to the international standards as specified. Where components cannot be manufactured according to these, VENDOR shall submit list of deviation to the specifications and get COMPANY's written agreement to the deviation.

4.2 Mechanical

The pumps shall be reciprocating pump as per API 674 and as specified in datasheet.

The pump shall be electric motor driven via power end gear and baseplate mounted complete with all auxiliary systems.

The pumps shall be capable of design performance as specified in the data sheets.

NPSHa specified in datasheet does not include head loss due to acceleration. The NPSHa after deducting the acceleration head shall exceed the NPSHr by at least one (1) meter.

Dampener's design shall comply with ASME Sec VIII Div. 1 as appropriate. Dampener's design shall be submitted for review/approval.

Dampeners shall limit the peak-to-peak pulsation levels at the line side nozzle of the device to ±1.5% of line pressure. Pulsation dampeners of bladder type are preferred. Other pulsation suppression devices like in-line pulsation damper or empty sphere type dampener can be offered provided they can meet the pulsation level. Pulsation dampeners with orifice or other components prone for clogging are not allowed. Dampeners shall be adequately sized to meet the pulsation levels as specified at all operating conditions and speed conditions. Dampener sizing shall ensure that the flow pulsations are not in resonance with any pump operating speed.

If forced lubrication system is required for the crank end side and gearbox, oil pump, double filters with interchanging valves, pressure relief valve and pressure transmitter shall be included as a minimum.

Pumps shall be provided with dry metallic flexible element couplings with spacer whenever required. The spacer shall be of sufficient length to permit removal of pump internals without disturbing the driver.

Unless otherwise specified, coupling shall be in compliance with ISO 14691. VENDOR may propose an alternative standard of a similar quality to ISO 14691 for COMPANY's approval.

The couplings shall be designed with a minimum service factor of 1.75 over driver nameplate rating excluding driver service factor.

Văn bản này được xác thực tại https://eoffice.vietsov.com.vn với số định danh: 646/25-TT-XDM/NIPI

Coupling components and assemblies shall be dynamically balanced to the ISO-1940 G2.5 as minimum

Couplings guards shall be of non-sparking materials. Aluminium shall not be used.

The coupling guard shall be sufficiently rigid to withstand a 90 kg static load without any part of the guard coming into contact with moving parts.

No section of the transmission shall be left unguarded. Un-perforated guarding shall be used.

All regions of pump (both suction and discharge) shall be designed for MAWP and shall comply with all the relevant section and clauses of API 674.

Unless otherwise specified all pumps shall have flanged suction and discharged nozzles as per ASME B16.5. Screwed-on flanges shall not be used.

All auxiliary connections on the pressure casing shall be fitted with flanged stubs, full penetration welded to the casing.

4.3 Material

All materials shall be as detailed on the project datasheets. When materials are not specified, the VENDOR may offer his standard material suitable for service and operating/design conditions, in an offshore marine salt laden environment.

In the case of materials that are nominated on the project data sheets or reference documents, the VENDOR may offer alternatives, provided they are of an equivalent or higher grade and offer an equivalent or greater service life. Any such alternatives shall be clearly indicated in the bid, along with any cost adjustments and technical data supporting the alternative. Alternative materials shall be subject to COMPANY's approval.

All materials shall be new and free of defects.

The use of asbestos or its compounds is not permitted for any application.

SS 304 shall not be used.

Material of non-pressure parts welded to pressure parts shall be same as pressure parts.

4.4 Electrical Requirements

All electrical equipment shall comply with *Specification for Electrical Requirements for Package Equipment (VSP-NIPI-TYP-TS-ES2-SP-10).*

LV motors shall comply with *Specification for LV Motors, (VSP-NIPI-TYP-TS-ES2-SP-08).*

Motors shall have a sufficient rating to operate continuously with a driven load to 110% of rated input load. The motor bearings shall be designed for all dynamic and static loads, including those caused by the driven equipment.

VENDOR shall provide two M10 screwed earthling bosses positioned on diagonally opposite corners of the skid with bolts and washers. All metal-to-metal parts of the supplied equipment shall be earth bonded.

Electric motor with 15 kW and above shall be equipped with anti-condensation heaters.

VENDOR shall provide complete information required in the motor datasheet. In addition, general arrangement drawing from the manufacturer shall be submitted for review.

4.5 Instrumentation Requirements

All instrumentation shall comply with the requirements in the *General Instrument Specification (VSP-NIPI-TYP-TS-IA2-SP-03) & Specification for Package Equipment Instrumentation (Doc. No.: VSP-NIPI-TYP-TS-IA2-SP-06)* and applicable codes, standards and regulations.

Văn bản này được xác thực tại https://eoffice.vietsov.com.vn với số định danh: 646/25-TT-XDM/NIPI

The equipment shall be provided complete with all instrumentation and control devices required to enable full automatic and safe operation. VENDOR shall be responsible for defining and supplying all such instrumentation requirements, which are not identified in this specification but essential for safe and reliable operation of the package.

All interface connection to the remote panels supplied by VENDOR or to COMPANY shall terminate in the junction boxes or local panels (if applicable) at the skid.

The skid shall have necessary provision for safe and proper routing of the COMPANY cable to the local panel (if applicable) or junction boxes. The openings in the junction boxes and local panel (if applicable) shall be suitable for the COMPANY's cable.

Instruments shall be provided with explosion protection in accordance with the *General Instrument Specification (VSP-NIPI-TYP-TS-IA2-SP-03) & Specification for Package Equipment Instrumentation (VSP-NIPI-TYP-TS-IA2-SP-06).*

4.6 Piping Requirements

On skid piping shall be in accordance with ASME B31.3 & *Piping Material Class Specification (VSP-NIPI-TYP-TS-PI1-SP-01).*

Flange joints shall be provided only where necessary for maintenance purposes. The piping arrangement shall provide adequate clearances for installation, removal and access for maintenance and operation. Tripping and overhead hazards shall be avoided. Piping shall terminate at skid edge flanges in compliance with ASME B16.5. Flange bolt holes shall straddle centre lines.

All necessary venting and draining arrangement shall be considered and supplied for the equipment for start-up, operation, shutdown and maintenance.

All skid piping shall be securely supported and shall not induce excessive loads on equipment within the skid. The supports shall either be adequate for transportation or alternatively temporary bracing shall be provided.

The allowable nozzle forces and moments on flanges shall be twice the values of table *"Nozzle Loadings" of API 610.*

Gaskets containing asbestos are not permitted.

4.7 Layout Requirements

The pump and motor, including accessories, shall be supplied mounted on a fabricated steel structure skid.

Reciprocating Pumps shall be designed in order to keep the plot plan to a minimum whilst ensuring operability/maintainability.

Consideration shall be given to layout within the skid to provide sufficient access for operation, inspection, and maintenance. The layout shall ensure access is available without the use of scaffolding or portable ladders.

4.8 Noise and Vibration

The sound pressure level when measured at a distance of one (1) metre at rated conditions for the pump assembly shall not exceed 85 dBA. All other equipment including auxiliary shall not exceed 85 dBA noise levels. VENDOR shall guarantee that the noise level shall not exceed such limit.

A noise test is required on the completed equipment. Noise measurement shall be in accordance with EEMUA 140 'Noise Procedure Specification'.

Văn bản này được xác thực tại https://eoffice.vietsov.com.vn với số định danh: 646/25-TT-XDM/NIPI

4.9 Utilities

Electrical power and utility supplies for the Pumps will be provided by COMPANY. The electrical power and utility data are specified in the Pump's datasheets.

Where utilities such as (instrument air, nitrogen etc.) are required for the packaged unit, the VENDOR shall inform the COMPANY of all utilities in the bid proposal.

5. FABRICATION REQUIREMENTS

Fabrication and assembly of the equipment shall be carried out as per the VENDOR Quality Manual and approved ITP.

Fabrication, cutting and welding of the equipment shall be started only after approval ITP is carried out.

VENDOR shall ensure that only latest drawings are used in the manufacture

Welding procedures and welder qualifications shall be submitted to COMPANY for approval prior to starting fabrication.

Method of preservation shall be provided by VENDOR.

6. INSPECTION AND TESTING REQUIREMENTS

6.1 General

VENDOR shall have an established and documented Quality Assurance System in accordance with ISO 9001.

Equipment shall be inspected and tested in accordance to VENDOR's Inspection and Test Plan (ITP). VENDOR's ITP shall be approved by the COMPANY. In addition, the inspection and testing shall be carried out in accordance with API 674 and datasheets.

VENDOR shall be responsible for ensuring that the pump shall be capable of performing to specification when installed at intended location.

6.2 Certification

Unless otherwise specified in the specifications, datasheet, equipment and material certification shall be in accordance with the relevant code and standard.

Material certification traceability for machinery components shall be as follows:

- Level 1 equivalent to EN 10204 - 3.1 for normal assurance on pressure containing parts and mechanical critical component like cylinder, manifolds, shaft....
- Level 2 equivalent to EN 10204 - 2.2, for non-critical items and non-pressurized parts

VENDOR shall obtain certification from TPI for the design verification and compliance of the package including materials, fabrication and testing. All costs for this certification shall be borne by the VENDOR. Vendor shall nominate the TPI during bid for COMPANY approval.

6.3 Inspection

VENDOR shall carefully and continuously control and test the quality of the materials and the manufacturing operations during the production of the goods, in order to assure that the goods will comply with the requirements of the purchase order.

NDE shall be performed as required by the codes and material specification as a minimum. If additional radiographic, ultrasonic, magnetic-particle or liquid-penetrant examination of the welds or materials is specified in datasheet, the methods and acceptance criteria shall be in accordance with the ASME BPVC section V & section VIII.

Văn bản này được xác thực tại https://eoffice.vietsov.com.vn với số định danh: 646/25-TT-XDM/NIPI

The COMPANY shall have the right to request additional inspection or examination if required to ensure that the equipment complies with the relevant specification and codes.

6.4 Shop/Factory Tests

The Reciprocating Pump shall be assembled and tested in the factory.

Testing of the Reciprocating Pump shall be conducted in accordance with API 674.

Pump acceptance tests shall include the following as a minimum prior to equipment shipment:

- Hydrostatic testing of pressure containing components as required by the applicable codes
- Pump performance test in accordance with API 674.
- NPSH test if the NPSH margin is less than one (1) meter
- Electrical testing as per the relevant project specification.
- 4 hours mechanical running test with all auxilaries at full load for 2 hours at partial load for balance 2 hours.

Pump performance tolerances shall be as per API 674.

Noise level test shall be conducted during mechanical running test.

Pump shall be tested in fully assembled condition. Segmental testing is not acceptable. A test procedure shall be prepared and submitted for COMPANY approval.

Testing of the electric motor shall be conducted in accordance with *Specification for LV Motors (VSP-NIPI-TYP-TS-ES2-SP-08).*

Pump with auxiliaries shall undergo a 4-hour mechanical running test prior to shipment. The procedure for this running test shall be agreed upon by the COMPANY and the VENDOR.

6.5 Site Test

Site Acceptance Test (SAT) shall be carried out at Offshore by COMPANY.

SAT shall include pre run checks, performance test of package. The performance test shall be conducted at least seventy two (72) hours at all operating conditions possible.

7. PROTECTIVE COATING

When specified on the project datasheets, all surfaces shall be painted in accordance with *Painting Specification for Platform (VSP-NIPI-TYP-GE-AC7-SP-01) & Basic Painting Schedules for Platform (VSP-NIPI-TYP-GE-AC7-SCH-01).*

Protective coating of equipment including internal lining (if any) shall be done after hydrostatic test only.

External preparation, priming and painting shall only be carried out after all pressure tests have been satisfactorily completed.

Equipment shall be despatched clean and dry, with rust preventative on all machined surfaces.

8. MARKING

All major items shall be furnished with a permanently attached SS316 nameplate. Text and numbering shall be clearly engraved, paint filled and a minimum of 5mm high. The nameplate shall be mounted in a prominent location secured by stainless steel screw or rivets.

Rotation arrows shall be cast-in or attached to major items of rotating equipment at a ready visible location if direction of rotation affects performance and/or reliability.

Văn bản này được xác thực tại https://eoffice.vietsov.com.vn với số định danh: 646/25-TT-XDM/NIPI

The nameplate of Reciprocating Pumps shall contain the following information:

- Project name
- VENDOR's name
- COMPANY's name
- Equipment name
- Equipment tag/serial number
- Size, type, and model
- Rated capacity
- Rated head
- Rated speed
- Minimum and maximum rated pressures
- Minimum and maximum rated temperatures
- MAWP
- Maximum allowable temperature
- Pumped liquid.

9. SPECIAL TOOLS

VENDOR shall provide one (1) set of special tools, if required, for erection, installation and maintenance of the equipment items.

The VENDOR shall identify all necessary special tools required to perform routine maintenance and any other recommended tools for specialised procedures.

Special tools or skill required for installation and operation shall be detailed in the Installation, Operation and Maintenance manuals.

Each special tool shall be tagged with a 316 stainless steel tag.

The COMPANY shall agree the special tools to be included in Purchase Order.

10. SPARES

VENDOR shall provide the following:

- Pre-commissioning, commissioning and start-up spares.
- Recommended spares for two years operation (price list only)

The spares shall be itemized and priced in the Bid.

All spare parts furnished by the VENDOR shall be wrapped and packed to preserve items as new condition under normal storage anticipated in Vietnam. The same parts shall be properly tagged so that later identification as to their intended usage will be facilitated.

All items supplied that be packed separately and clearly marked as "Spare Parts" and shipped with equipment in accordance with the instructions from COMPANY.

The COMPANY shall agree pre-commissioning, commissioning and start-up spares to be included in Purchase Order.

11. PREPARATION FOR SHIPMENT

Provision for 12 months outdoor storage in tropical marine conditions shall be provided.

VENDOR shall provide full details on the preservation method and any scheduled maintenance requirements during the year.

Văn bản này được xác thực tại https://eoffice.vietsov.com.vn với số định danh: 646/25-TT-XDM/NIPI

Protection shall be provided against atmospheric corrosion while in transit and while in outdoor storage. All machined surfaces shall be protected with an easily removable anti-corrosion compound.

Equipment containing rust preservatives, insulating oils or other fluids shall be suitably tagged at opening to indicate the nature of the contents and shipping and storage precautions. Copies of Material Safety Data Sheets for the chemical used shall be despatched with the equipment and a separate copy forwarded to the COMPANY.

Any items such as instruments, removable internals, hoses, etc. liable to be damaged during shipment shall be dismantled, shipped separately and reinstalled at the site. All such item shall be tagged. All connections shall be marked correspondingly to facilitate field assembly. All connections shall be provided with thread protectors or flange blanks to prevent damage during shipping and handling.

Load test certificates duly signed by Third Party Inspection Agency shall be shipped with all lifting equipment, spreader bars, slings and shackles wherever required.

Commissioning spares as agreed with COMPANY shall be shipped with the equipment.

The shipping crates shall be constructed of wood and suitably packed to protect all items against damage during the shipment and storage.

The contents of all boxes or packages shall be recorded in detail on the packing list. The transported package shall have the necessary fastenings, protections and lifting facilities to satisfy lifting and sea-fastening loads and restraints.

12. WARRANTY

VENDOR shall have final and total responsibility for the design, manufacture and performance of all equipment as described in this specification.

VENDOR shall provide warranty for the complete equipment for a period of 12 months from start up but not exceeding 18 months from receiving goods at the COMPANY's yard.

The VENDOR shall replace and install without cost to the COMPANY any materials, supplies or equipment that fail under design or test condition due to defects in material or workmanship provided the defect is reported within the warranty period. Acceptance of any purchase order will signify acceptance of all conditions of this warranty.

13. DOCUMENTATION

VENDOR shall forward the proposal in number of copies as specified in the inquiry documents. As a minimum, the proposal shall include drawings and data that are identified as being required to be submitted with the bid in the inquiry documents.

The proposal shall also include a specific statement that the system and all its components are in strict accordance with this specification, applicable project specification as well as International Code & Standards. If the system and components are not in strict accordance, VENDOR shall include a list that details and explains each deviation. VENDOR shall provide details to enable the COMPANY to evaluate any proposed alternative designs.

As minimum, VENDOR shall issue drawing/document as specified in the requisition for COMPANY review or approval during detail engineering. Detailed documentation requirements are specified in separate document Purchase Requisition.

Văn bản này được xác thực tại https://eoffice.vietsov.com.vn với số định danh: 646/25-TT-XDM/NIPI

FORMAT: A3

DRAIN PUMP	
TAG NO.	H-211
TYPE	RECIPROCATING
CAPACITY	5 M³/HR
DISCHARGE PRESSURE	31 BARG
OPERATING TEMPERATURE	45 °C

CLOSED DRAIN TANK	
TAG NO.	V-200
TYPE	HORIZONTAL K.O DRUM
OPERATING PRESSURE	0-2.0 BARG.
OPERATING TEMPERATURE	0 °C / 55 °C
DESIGN PRESSURE	7.0 BARG
DESIGN TEMPERATURE (MIN/MAX)	-29 °C / 80 °C
DIMENSIONS	1100 MM (ID) x 2200 MM (T/T)

OPEN DRAIN TANK	
TAG NO.	V-300
TYPE	RECTANGULAR
OPERATING PRESSURE	ATMOSPHERE
OPERATING TEMPERATURE	0 °C / 55 °C
DESIGN PRESSURE	FW+0.05 BARG
DESIGN TEMPERATURE (MIN/MAX)	0 °C / 80 °C
INSIDE DIMENSIONS	2200 MM (L) x 1000 MM (W) x 1600 MM (H)

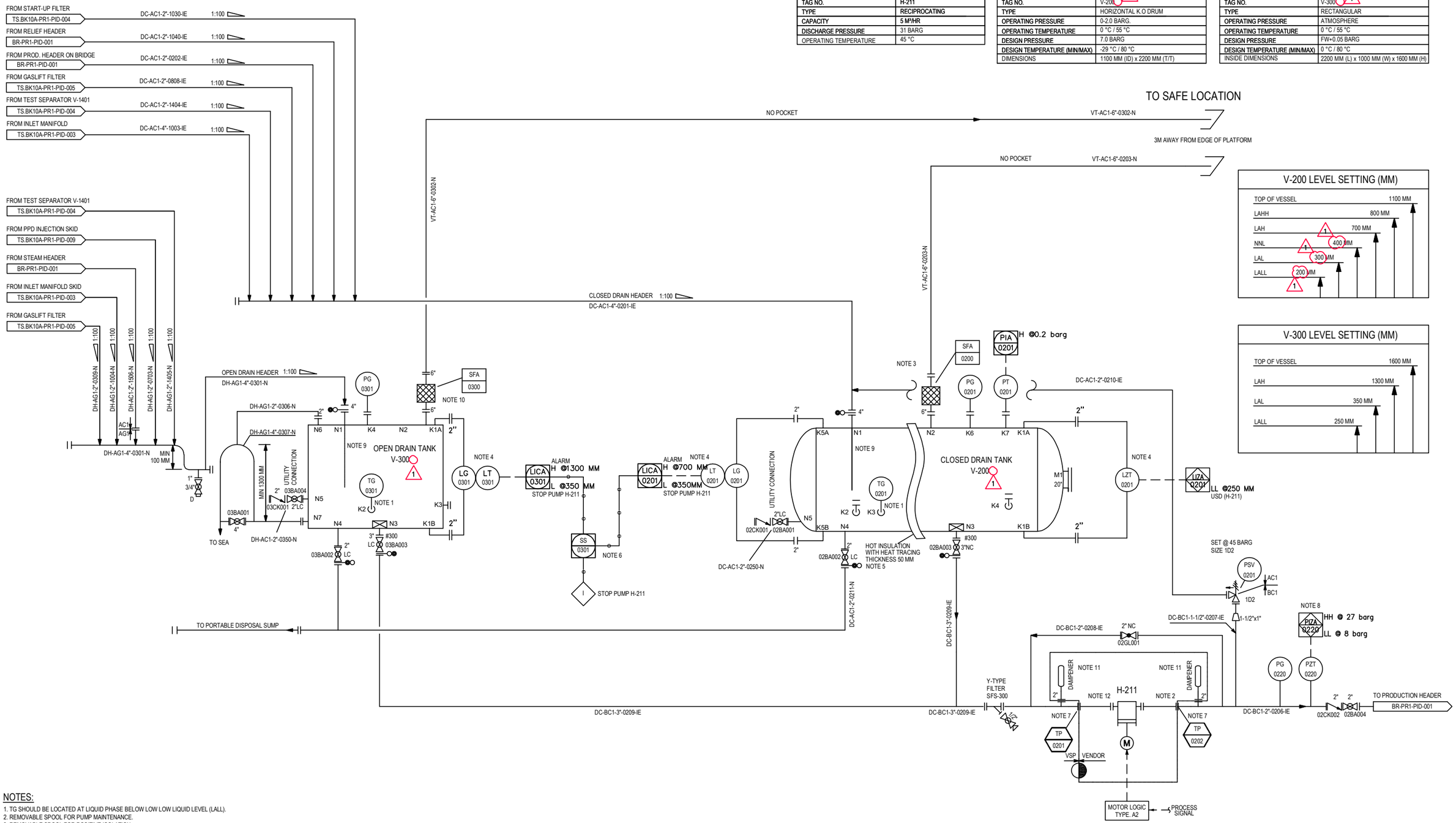

NOTES:

1. TG SHOULD BE LOCATED AT LIQUID PHASE BELOW LOW LOW LIQUID LEVEL (LALL).
2. REMOVABLE SPOOL FOR PUMP MAINTENANCE.
3. REMOVABLE SPOOL FOR POSITIVE ISOLATION.
4. ALL LT, LZT AND LG SHALL BE HEAT TRACED.
5. HEAT TRACING IS PROVIDED UP TO LEVEL HIGH HIGH ALARM.
6. SOFT SELECTOR SWITCH ON OWS TO SELECT ANY OF THE SIGNAL FROM LAL 0301 & LAL 0201 BASED ON DRAIN PUMP SUCTION LINE UP FROM RESPECTIVE VESSEL (V-300A AND V-200A).
7. SUCTION / DISCHARGE DAMPENERS AND REDUCER WILL BE SUPPLIED BY PUMP PACKAGE VENDOR AS LOOSE ITEMS.
8. SIGNAL PALL-0220 IS FUNCTIONED ONLY WHEN DRAIN PUMP RUNNING AND A DELAY TIME 15 SEC (WILL BE ADJUSTED) AFTER PUMP STARTING WILL BE SET FOR PALL-0220.
9. PIPE SHALL BE SUBMERGED BELOW LAL TO PREVENT GAS FROM MIGRATING INTO THE DRAIN SYSTEM.
10. FLAME ARRESTOR IS IN-LINE TYPE AND ITS LOCATION SHALL BE ACCESSIBLE FOR MAINTENANCE.
11. END LINE TYPE ONLY.
12. IF PUMP SUCTION/DISCHARGE SIZE IS DIFFERENT FROM PIPE SIZE, CONTRACTOR SHALL PROVIDE ADDITIONAL REDUCER.

GENERAL NOTES:

1. SET POINT VALUES ARE DETERMINED ACCORDING TO DOCUMENT BK1.BK10.BK10A-001-TS.BK10A-PR1-DB-001 AND WILL BE ADJUSTED IN THE OPERATION STAGE.
2. ALL BALL VALVE ON BK10A SHOULD BE FULL BORE.
3. SCOPE OF SUPPLY: VSP / VENDOR

CONTROLLED

REFERENCE (If any)						
		1	29.07.25	IFA		
		0	23.06.25	IFC		
REF. DRAWING No.	REF. DRAWING TITLE	REV.	DATE	DES.	PREPARED: P.T.TUNG	CHECKED: B.H.HUNG

Signed by: Lê Thị Hằng
Date: 30/07/2025 16:06:29
Certified by: Vietsovpetro CA
DC: L.T.HANG

Signed by: Гайнутдинов Евгений Нурыгалиевич
Date: 01.08.2025 07:37:49
Certified by: Vietsovpetro CA
ENG.MGR: GAYNUTDINOV

Signed by: Авдеев Андрей Сергеевич
Date: 01.08.2025 08:38:41
Certified by: Vietsovpetro CA
PRO.MGR: AVDEEV A.S.

Signed by: Тихонов Антон Николаевич
Date: 01.08.2025 07:36:25
Certified by: Vietsovpetro CA

Signed by: Pham Thanh Tùng
Date: 30/07/2025 15:18:56
Certified by: Vietsovpetro CA

Signed by: Борозна Алексей Олегович
Date: 31.07.2025 17:22:59
Certified by: Vietsovpetro CA
DEPT.MGR: T.M.DUC

Signed by: Trương Minh Đức
Date: 01/08/2025 07:22:13
Certified by: Vietsovpetro CA

RESEARCH AND ENGINEERING INSTITUTE FOR OFFSHORE OIL AND GAS

PROJECT: BK10A-WELLHEAD PLATFORM

DRAWING NO.: BK1.BK10.BK10A-001-TS.BK10A-PR1-PID-007

DRAWING TITLE: P&ID FOR OPEN DRAIN, CLOSED DRAIN/VENT SYSTEM

SCALE: N/A
SHEET: 1/1
PHASE: DE

BK1.BK10.BK10A-001-TS.BK10A-PR1-PID-007_1_PID FOR OPEN DRAIN AND CLOSED DRAIN.VENT SYSTEM

Văn bản này được xác thực tại https://eoffice.vietsov.com.vn với số định danh: 738/25-TT-XDM/NIPI

RESEARCH AND ENGINEERING INSTITUTE FOR OFFSHORE OIL AND GAS

PROJECT NAME : BK-10A WELLHEAD PLATFORM

DOCUMENT TITLE : DRAIN PUMP SIZING CALCULATION

DOCUMENT NO. : BK1.BK10.BK10A-001-TS.BK10A-PR1-CA-003

PHASE : DE

			Signed by: Lê Thị Hằng Date: 21/07/2025 09:34:15 Certified by: Vietsovpetro CA CONTROLLED	Signed by: Гайнутдинов Евгений Нурлыгалиевич Date: 24.07.2025 08:25:16 Certified by: Vietsovpetro CA	Signed by: Авдеев Андрей Сергеевич Date: 24.07.2025 10:31:11 Certified by: Vietsovpetro CA
			DC: L.T.HANG	**ENG.MGR: GAYNUTDINOV E.N.**	**PRO. MGR: AVDEEV A.S.**
			Signed by: Phạm Thanh Tùng Date: 21/07/2025 08:42:24 Certified by: Vietsovpetro CA	Signed by: Борозна Алексей Олегович Date: 23.07.2025 18:11:22 Certified by: Vietsovpetro CA	Signed by: Trương Minh Đức Date: 24/07/2025 07:43:12 Certified by: Vietsovpetro CA
0	IFA	18.07.25			
REV.	**DES.**	**DATE**	**PREPARED: P.T.TUNG**	**CHECKED: BOROZNA A.O.**	**DEPT.MGR: T.M.DUC**

Văn bản này được xác thực tại https://eoffice.vietsov.com.vn với số định danh: 710/25-TT-XDM/NIPI

TRACK CHANGES

No	Rev.	Content of Change	Note
1	0	Issued For Approval	

Văn bản này được xác thực tại https://eoffice.vietsov.com.vn với số định danh: 710/25-TT-XDM/NIPI

TABLE OF CONTENT

1	**GENERAL**	**4**
1.1	INTRODUCTION	4
1.2	PURPOSE	4
1.3	LANGUAGE	5
1.4	DEFINITIONS	5
1.5	ABBREVIATIONS	6
1.6	REFERENCE	6
1.7	UNIT OF MEASUREMENT	6
2	**DESIGN BASIS AND ASSUMPTION**	**6**
3	**CALCULATION RESULTS**	**7**
4	**APPENDICES**	**8**
Appendix 1- Drain Pump Sizing Calculation		8

Văn bản này được xác thực tại https://eoffice.vietsov.com.vn với số định danh: 710/25-TT-XDM/NIPI

1 GENERAL

1.1 INTRODUCTION

BK-10A Wellhead Platform belongs to Vietsovpetro JV. It will be located in Block 09-1, White Tiger oil field, offshore the Socialist Republic of Vietnam.

BK-10A is connected with BK-10 by a linking bridge. BK-10A is an unmanned platform with 12 slots (03 spare slots) and will be remotely controlled from the host platform BK-10 via fiber optic cable.

There will be 09 production wells on BK-10A (02 wells will be converted into water injection wells in future as planned) and 03 wells can be added in the future.

Based on the criterion of the need for production and maximizing the return on investment, BK-10A will be considered to have the minimum facilities. The full well stream of BK-10A will be gathered together with the produced fluid of BK-10 and BK-1, preliminarily separated on BK-10 and then transferred to CPP-2.

The scope of this project is detailed engineering design for the BK-10A Wellhead Platform, Linking Bridge and modification of BK-10.

Location of BK-10A and related platforms as below.

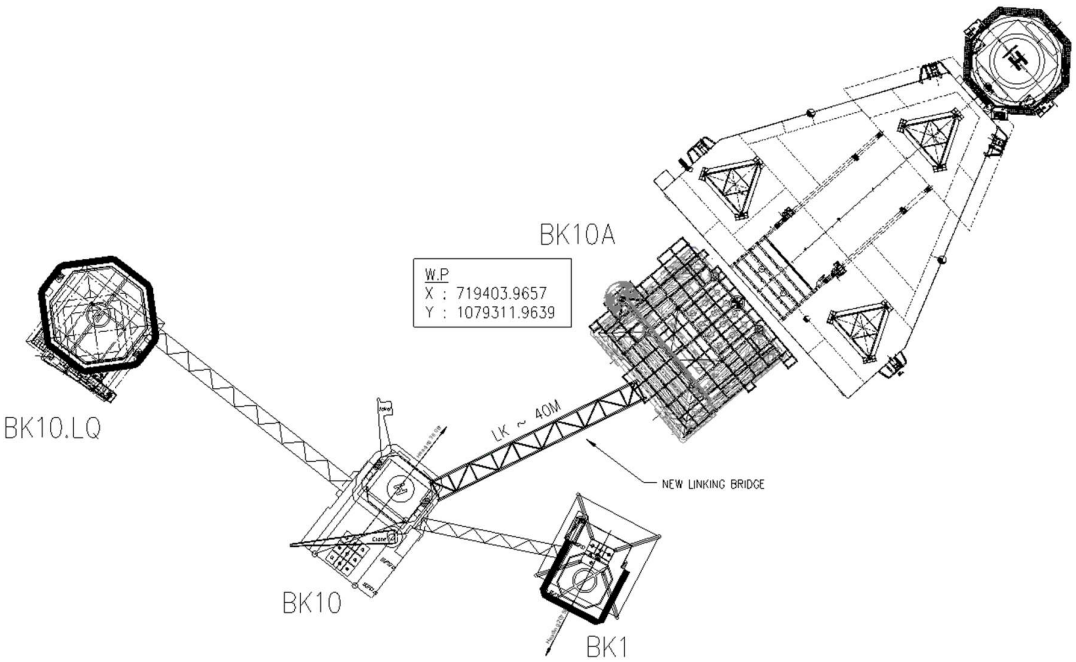

Figure 1: Location of the BK-10A Wellhead Platform and related platforms.

1.2 PURPOSE

The purpose of this document is to:

- Determine the available Net Positive Suction Head (NPSHa), discharge pressure, suction pressure, differential pressure and head, pump shaft power of the Drain Pump.
- Determine the suction and discharge line sizes of the Drain Pump.

Văn bản này được xác thực tại https://eoffice.vietsov.com.vn với số định danh: 710/25-TT-XDM/NIPI

1.3 LANGUAGE

The English Language shall be used for all project drawings, specifications, calculations, datasheets and reports.

The English and Russian Languages could be used in the project communications, correspondence and progress reports.

The Russian, Vietnamese and/or English Languages should be accepted for Cost Estimate Documentation.

1.4 DEFINITIONS

PROJECT	BK-10A WELLHEAD PLATFORM
COMPANY	VIETSOVPETRO JOINT VENTURE
ENGINEERING CONTRACTOR	RESEARCH AND ENGINEERING INSTITUTE
CONTRACTOR	Party which carries out all or part of the design, engineering, procurement, construction and commissioning of the project.
VENDOR (or SUPPLIER)	The person, group or organization responsible for the design, manufacture, testing and load-out/shipping, installing of the equipment.
SUB-VENDOR	The person, group or organization who may be employed by the Vendor to provide services for the design, manufacture, testing and load-out/shipping, installing of the equipment or to provide materials, sub-components and sub-assemblies for incorporation in the equipment packages.
THIRD PARTY	An Independent 3rd Party Certifying Authority appointed by Vendor approved by the Company for certifying specific equipment / equipment packages fabricated at Vendor's shop.
INSPECTOR	Company appointed person, group or organization acting in behalf of the Company responsible for inspection and witness testing of equipment/ equipment packages at Vendor's shop.
INDEPENDENT VERIFICATION SERVICES	Independent agency contracted by the Company to provide Classification/ Certification services to Field Development Project's facilities from design review to construction & commissioning (startup) in accordance with CA Rules & Regulations, applicable Codes, Standards & Regulations.
CERTIFYING	Independent agency contracted by the Company to provide
AUTHORITY	Classification/ Certification services to Field Development Project's facilities from design review to construction & commissioning (startup) in accordance with Classification Agency Rules & Regulations, applicable Codes, Standards & Vietnamese Register Regulations.

Văn bản này được xác thực tại https://eoffice.vietsov.com.vn với số định danh: 710/25-TT-XDM/NIPI

Shall	Indicates mandatory requirements.
Should	Indicates preferred course of action.
May	Indicates possible course of action.

1.5 ABBREVIATIONS

DN	Diameter Nominal
FEED	Front End Engineering Design
ID	Inside Diameter
LALL	Level Alarm Low Low
LAHH	Level Alarm High High
NPSHa	Net Positive Suction Head Available

1.6 REFERENCE

1. API 14E Recommended Practice for Design and Installation of Offshore Production Platform Piping System.
2. GPSA Engineering Data Book 13th Edition 2012; Section 12.
3. Heat and Material Balance, Document No. BK1.BK10.BK10A-001-GE-PR1-HMB-001.
4. Simulation Report, Document No. BK1.BK10.BK10A-001-TS.BK10A-PR1-RPT-001.
5. Equipment Layout, Document No. BK1.BK10.BK10A-001-TS.BK10A-PI1-LD-001
6. Process Design Basis, Document No. BK1.BK10.BK10A-001-GE-PR1-DB-001

1.7 UNIT OF MEASUREMENT

The design shall be performed using the SI system units.

2 DESIGN BASIS AND ASSUMPTION

The Drain Pump should be calculated based on following assumptions:

- Configuration: 1 x 100%
- Type: Progressive cavity, electric motor.
- Pump capacity: 5 m^3/hr
- For NPSHa calculations, the suction liquid static head is considered from LAL level in the Closed Drain Vessel.
- Since the pump may transport either hydrocarbon liquid or water, to be conservative, the calculation of NPSHa and differential head of the pump will be evaluated based on 2 cases. First case is assumed that fluid is only water (maximum density) and the other case is assumed that fluid is only hydrocarbon (minimum density).

Văn bản này được xác thực tại https://eoffice.vietsov.com.vn với số định danh: 710/25-TT-XDM/NIPI

- The equivalent lengths and elevations are estimated based on the Equipment Layout, Document No. BK1.BK10.BK10A-001-TS.BK10A-PI1-LD-001 and all the estimated lengths estimated are depicted on the pump system sketch as shown in Appendix A.
- Pump suction and discharge line sizing criteria are as follow:

	Type	Maximum Velocity (m/s)	Pressure Drop (bar/km)	
			Normal	Maximum
Pump suction [ISO 13703]	Centrifugal Pump	0.6 – 0.9 (Note 3)	0.6 for liquid at bubble point (Note 1) 2.3 for subcooled liquid (Note 2)	0.9 for liquid at bubble point (Note 1) 3.5 for subcooled liquid (Note 2)
Pump discharge [ISO 13703]	Centrifugal Pump	1.8 – 2.7	3.5 for P ≤ 50 barg 7.0 for P > 50 barg	4.5 for P ≤ 50 barg 9.0 for P > 50 barg

Notes:

- *Applicable to liquid containing dissolved gas.*
- *A sub-cooled liquid is defined as one that is at least 15°C below the fluid bubble point.*
- *For sub-cooled liquid, the maximum allowable velocity for pump suction can be increased by 0.3 m/s from the given value*.

3 CALCULATION RESULTS

The calculations are detailed in the Appendix A and summarized as below:

Table 3.1. Calculation Results of Closed Drain Pumps

Parameter	Value		Unit
	CASE 1 – Maximum Density	CASE 2 – Minimum Density	
Design Capacity (per Pump)	5.00	5.00	m^3/hr
Pump Suction Pressure	1.60	1.58	bara
Pump Discharge Pressure	31.64	31.58	bara
Differential Pressure	30.04	30	bar
Differential Head	305.1	374	m
NPSHa	10.16	7.5	m
Pump Hydraulic Power	4.589	4.583	kW
Pump Efficiency	55.00	55.00	%
Pump Shaft Power	8.34	8.33	kW

Table 3.2. Calculation Results of H-211 Suction and Discharge Lines

Description	CASE 1 – Maximum Density	CASE 2 – Minimum Density

Văn bản này được xác thực tại https://eoffice.vietsov.com.vn với số định danh: 710/25-TT-XDM/NIPI

	Line Size (inch)	Flow Velocity (m/s)	Pressure Drop (bar/km)	Line Size (inch)	Flow Velocity (m/s)	Pressure Drop (bar/km)
H-211 Suction Line	3	0.36	0.22	3	0.36	0.22
H-211 Discharge Line	2	0.80	1.57	3	0.80	1.57

4 APPENDICES

Appendix 1- Drain Pump Sizing Calculation

Văn bản này được xác thực tại https://eoffice.vietsov.com.vn với số định danh: 710/25-TT-XDM/NIPI

APPENDIX 1

DRAIN PUMP SIZING CALCULATION

(07 pages included this page)

Văn bản này được xác thực tại https://eoffice.vietsov.com.vn với số định danh: 710/25-TT-XDM/NIPI

Appendix 1: **Drain Pump Sizing Calculation**
Equipment Tag name: **H-211**
Ref. P&ID No.: **BK1.BK10.BK10A-001-TS.BK10A-PR1-PID-007**

1. CALCULATION BASIS & ASSUMPTIONS

1. Since Drain Pump may transport either hydrocarbon liquid or water, to be conservative, the calculation of NPSHa and differential head of the pump will be evaluated based on 2 cases. First case is assumed that fluid is only water (maximum density) and the other case is assumed that fluid is only hydrocarbon (minimum density).
2. Liquid Properties at Pumping Conditions **(Case 1. Maximum Density)**:

- Heavy Liquid Mass Density	=	1004	kg/m^3	- Design Margin	=	1.10	
- Heavy Liquid Viscosity	=	0.797	cP	- Design Flowrate	=	5.50	m^3/hr
- Overall Pressure @ max.T	=	0.495	bar(a)	- Overall Pressure @suction	=	1.5	bar(a)
- Pump Capacity	=	5.00	m^3/hr	- Operating Discharge (Max.)	=	31.0	bar(a)

Stream Simulation: Liq to Drain Pump — Mixed Drain Vap Press

3. Pump Specifications:

- Tag Number	H-211	- Duty	1 x 100%
- Pump Type	Reciprocating	- Pump Efficiency =	55.00 %

2. SKETCH

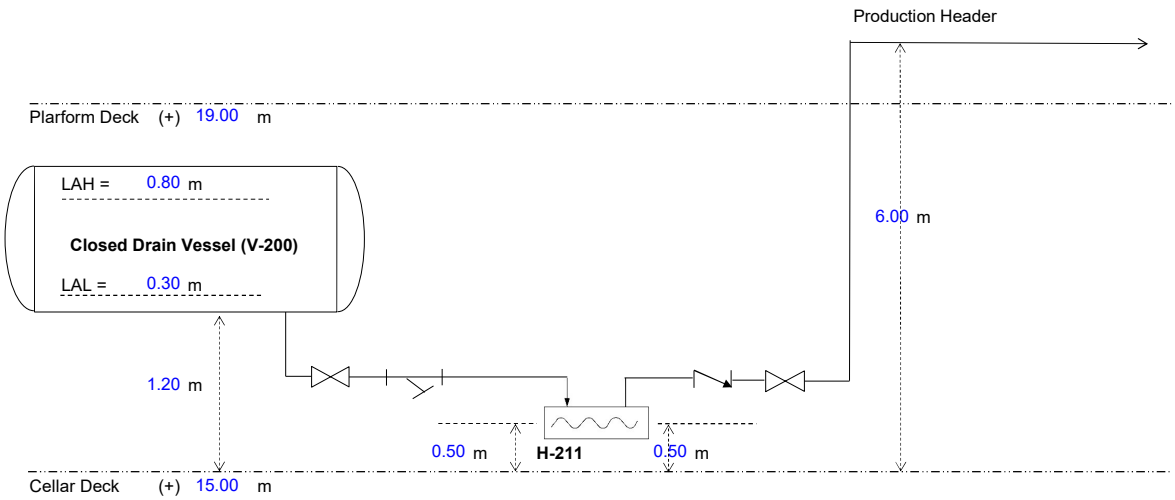

3. RESULTS & SUMMARY (Case 1. Maximum Density)

Pump

Pump Suction Pressure	=	1.60	bar(a)	=	0.59	bar(g)	
Pump Discharge Pressure	=	31.64	bar(a)	=	30.63	bar(g)	
Differential Pressure	=	30.04	bar				
Differential Head	=	305.1	m				
$NPSH_a$	=	10.16	m	(w/o suction dampener)	=	10.83	m (w/ suction dampener)
Pump Hydraulic Power	=	4.589	kW				
Pump Efficiency	=	55.00	%	(VTC)			
Pump Shaft Power	=	8.34	kW				

Line Sizing

		Pump Suction	Pump Discharge
Line Size	in	3	2
Velocity	m/s	0.36	0.80
Pressure Drop	bar/km	0.22	1.57

Văn bản này được xác thực tại https://eoffice.vietsov.com.vn với số định danh: 710/25-TT-XDM/NIPI

Appendix 1: **Drain Pump Sizing Calculation**
Equipment Tag name: **H-211**
Ref. P&ID No.: **BK1.BK10.BK10A-001-TS.BK10A-PR1-PID-007**

4. CALCULATION

Pump Suction / Discharge Line Sizing

Flow Line	Criteria	Size, inch	Schedule	Velocity (m/s)	ΔP (bar/km)	Max Velocity (m/s)	Max ΔP (bar/km)	Status
Pump Suction	SUCR2	3	80	0.36	0.22	**0.50**	**2.30**	**OK**
Pump Discharge	DISR2	2	80	0.80	1.57	**1.40**	**3.50**	**OK**

Available Net Positive Suction Head, $NPSH_a$

$NPSH_a = h_p - h_{vpa} + h_{st} - h_f - h_{vh} - h_a$ where

h_p = absolute pressure due to pressure, atmospheric or otherwise, on surface of liquid going to suction, m of liquid
h_{vpa} = the absolute vapor pressure of the liquid at suction temperature, m of liquid
h_{st} = static head, positive or negative, due to liquid level above or below datum line (centerline of pump), m of liquid
h_f = friction head, or head loss due to flowing friction in the suction piping, including entrance and exist losses, m of liquid
h_{vh} = velocity head, m of liquid
h_a = acceleration head, m of liquid

$h_a = (L \times v \times n \times C) / (K \times g)$

where:
L = straight pipe length without fittings
(With suction dampener, L can be reduced to 5 - 15 nominal pipe diameter)
n = 300 r/m (pump speed)
C = 0.066 (triplex single or double-acting)
K = 2.00 (hydrocarbons)

h_p = 15.37 m liquid
h_{vpa} = 5.03 m liquid
h_{st} = 1.00 m liquid
h_f = 0.09 m liquid
h_{vh} = 0.01 m liquid
h_a = 1.09 m liquid (without suction dampener)
h_a = 0.41 m liquid (with suction dampener)

NPSHa = 10.16 m liquid (without suction dampener)
10.83 m liquid (with suction dampener)

Pump Suction Pressure, P_s

$P_s = P_{o,s} + P_{st,s} - P_{f,s}$
= **1.60** bara

Pump Discharge Pressure, P_d

$P_d = P_{o,d} + P_{st,d} + P_{f,d}$
= **31.64** bara

Differential Head

$\Delta P = P_d - P_s$ = **30.04** bara

$\Delta H = \Delta P / (\rho \times g)$ = **305.11** m liquid

Pump Hydraulic Power, P

$P = Q \times \Delta H \times \rho \times g$ = **4.59** kW

Pump Efficiency = **55.00** %

Pump Shaft Power = **8.34** kW

Văn bản này được xác thực tại https://eoffice.vietsov.com.vn với số định danh: 710/25-TT-XDM/NIPI

Appendix 1: **Drain Pump Sizing Calculation**

Equipment Tag name: **H-211**

Ref. P&ID No.: **BK1.BK10.BK10A-001-TS.BK10A-PR1-PID-007**

4.CALCULATION (cont)

					Line Description:		Pump Suction	Pump Discharge		
Possible Maximum Number of Pumps running at a time							1			
I. FLUID DETAILS										
Flowrate			Q	kg/h			5,520	5,520		
Flowrate			W	kg/s			1.53	1.53		
Fluid Density			ρ	kg/m^3			1,004	1,004		
Fluid Viscosity			μ	cP			0.80	0.80		
II. PIPE DETAILS										
Straight Length			L	m			3.0	30.0		Assumption
Roughness			e	m			0.000046	0.000046		
Nominal Diameter				inch			3	2		
Schedule							80	80		
Nonstandard Pipe ID				mm			N/A	N/A		
Pipe ID				mm			73.7	49.3		
III. FLOW SUMMARY										
Volumetric Flowrate			Q	Act m^3/h			5.50	5.50		
				Act m^3/s			0.00153	0.00153		
Velocity			V	m/s			0.359	0.802		
Reynolds Number			Re				33,249	49,728		
Friction Factor			f				0.0247	0.0240		
IV. FITTINGS										
Ball Valve	Reduced bore 40 mm and smaller			65 D						
	Reduced bore 50 mm and larger			45 D			1	2		
Gate Valve	Standard bore			13 D						
	Reduced bore 40 mm and smaller			65 D						
Globe Valve	Straight pattern			340 D						
	Y pattern			160 D						
	Angle pattern			145 D						
Check Valve	Swing type			135 D				1		
	Ball or piston type, 40 mm and smaller			340 D						
Plug Valve	Regular pattern			45 D						
Butterfly Valve	150 mm and larger			20 D						
Tee-equal	Flow straight through			20 D			2	2		
	Flow through side outlet			65 D				1		
Elbow	90°, R= 1 ½ D			20 D			3	3		
	45°, R= 1 ½ D			16 D						
Bend	90°, R= 4 D			14 D						
	90°, R= 5 D			16 D						
	180°, R= 4 D			25 D						
	180°, R= 5 D			28 D						
Strainer	Pump suction Y-type and bucket type			250 D			1			
Nozzle	Product Inlet Nozzle vessel/tank			64 D			1			
	Product Outlet Nozzle vessel/tank			32 D				1		
Equivalent Length of Fittings		ΣLeq, fittings		m			35.0	21.4		
Equivalent Length of Reducer		Leq, reducer		m			0.50			
Equivalent Length of Expander		Leq, expander		m				1.00		
Straight Pipe Length		Lpipe		m			3.00	30.00		Assumption
Design Margin		Ldesign		m			0.30	3.00		10% of Lpipe
Total Equivalent Length incl.of design margin		Leq, total		m			**38.8**	**55.4**		
V. PRESSURE DROP										
Other ΔP: Filter, Control Valve, Metering,…				kPa						
Pipe Pressure Drop		Ppipe		kPa/m			0.022	0.157		
				bar/km			0.22	1.57		
Total Pipe Pressure Drop		Ppipe		kPa			0.84	8.72		
TOTAL SYSTEM PRESSURE DROP				**kPa**			**0.84**	**8.72**		

Văn bản này được xác thực tại https://eoffice.vietsov.com.vn với số định danh: 710/25-TT-XDM/NIPI

Appendix 1: **Drain Pump Sizing Calculation**
Equipment Tag name: **H-211**
Ref. P&ID No.: **BK1.BK10.BK10A-001-TS.BK10A-PR1-PID-007**

1. CALCULATION BASIS & ASSUMPTIONS

1. Since Drain Pump may transport either hydrocarbon liquid or water, to be conservative, the calculation of NPSHa and differential head of the pump will be evaluated based on 2 cases. First case is assumed that fluid is only water (maximum density) and the other case is assumed that fluid is only hydrocarbon (minimum density).
2. Liquid Properties at Pumping Conditions **(Case 2. Minimum Density)**:

- Light Liquid Mass Density	=	817	kg/m^3	- Design Margin	=	1.10	
- Light Liquid Viscosity	=	4.636	cP	- Design Flowrate	=	5.50	m^3/hr
- Overall Pressure @ max.T	=	0.892	bar(a)	- Overall Pressure @suction	=	1.5	bar(a)
- Pump Capacity	=	5.00	m^3/hr	- Operating Discharge (Max.)	=	31.0	bar(a)

Stream Simulation: Liq to Drain Pump — Drain Oil Vap Press

3. Pump Specifications:

- Tag Number	P-0210	- Duty	1 x 100%
- Pump Type	Reciprocating	- Pump Efficiency =	55.00 %

2. SKETCH

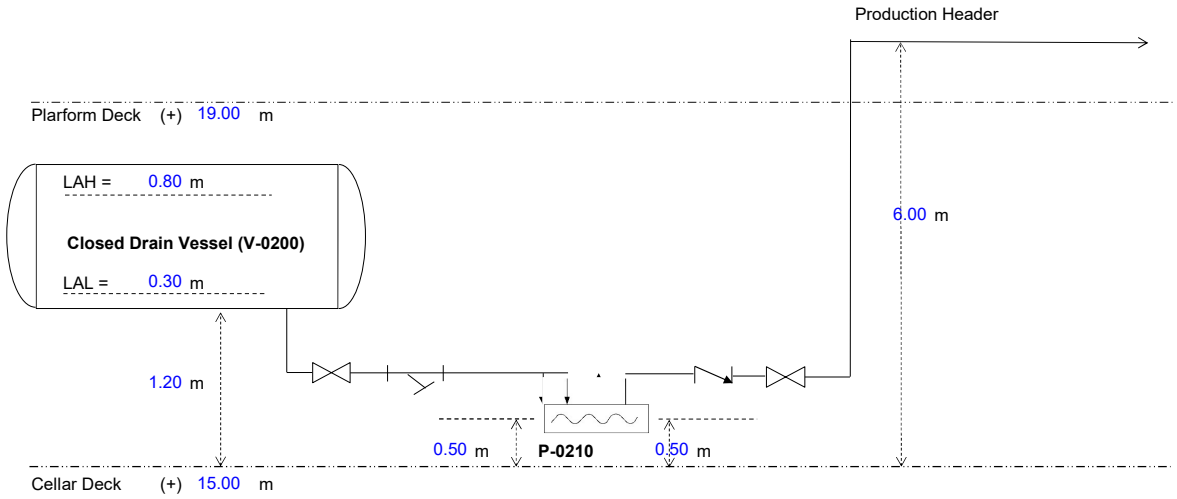

3. RESULTS & SUMMARY (Case 2. Minimum Density)

Pump

Pump Suction Pressure	=	1.58	bar(a)	=	0.57	bar(g)	
Pump Discharge Pressure	=	31.58	bar(a)	=	30.56	bar(g)	
Differential Pressure	=	30.00	bar				
Differential Head	=	374.0	m				
NPSH$_a$	=	7.50	m	(w/o suction dampener) =	8.18	m	(w/ suction dampener)
Pump Hydraulic Power	=	4.583	kW				
Pump Efficiency	=	55.00	%	(VTC)			
Pump Shaft Power	=	8.33	kW				

Line Sizing

		Pump Suction	Pump Discharge
Line Size	in	3	2
Velocity	m/s	0.36	0.80
Pressure Drop	bar/km	0.22	1.57

Văn bản này được xác thực tại https://eoffice.vietsov.com.vn với số định danh: 710/25-TT-XDM/NIPI

Appendix 1: **Drain Pump Sizing Calculation**
Equipment Tag name: **H-211**
Ref. P&ID No.: **BK1.BK10.BK10A-001-TS.BK10A-PR1-PID-007**

4. CALCULATION

Pump Suction / Discharge Line Sizing

Flow Line	Criteria	Size, inch	Schedule	Velocity (m/s)	ΔP (bar/km)	Max Velocity (m/s)	Max ΔP (bar/km)	Status
Pump Suction	SUCR2	3	80	0.36	0.22	**0.50**	**2.30**	**OK**
Pump Discharge	DISR2	2	80	0.80	1.57	**1.40**	**3.50**	**OK**

Available Net Positive Suction Head, $NPSH_a$

$NPSH_a = h_p - h_{vpa} + h_{st} - h_f - h_{vh} - h_a$ where

h_p = absolute pressure due to pressure, atmospheric or otherwise, on surface of liquid going to suction, m of liquid

h_{vpa} = the absolute vapor pressure of the liquid at suction temperature, m of liquid

h_{st} = static head, positive or negative, due to liquid level above or below datum line (centerline of pump), m of liquid

h_f = friction head, or head loss due to flowing friction in the suction piping, including entrance and exist losses, m of liquid

h_{vh} = velocity head, m of liquid

h_a = acceleration head, m of liquid

$h_a = (L \times v \times n \times C) / (K \times g)$

where:

L = straight pipe length without fittings

(With suction dampener, L can be reduced to 5 - 15 nominal pipe diameter)

n = 300 r/m (pump speed)

C = 0.066 (triplex single or double-acting)

K = 2.00 (hydrocarbons)

h_p = 18.87 m liquid

h_{vpa} = 11.12 m liquid

h_{st} = 1.00 m liquid

h_f = 0.15 m liquid

h_{vh} = 0.01 m liquid

h_a = 1.09 m liquid (without suction dampener)

h_a = 0.41 m liquid (with suction dampener)

NPSHa = 7.50 m liquid (without suction dampener)

8.18 m liquid (with suction dampener)

Pump Suction Pressure, P_s

$P_s = P_{o,s} + P_{st,s} - P_{f,s}$

= **1.58** bara

Pump Discharge Pressure, P_d

$P_d = P_{o,d} + P_{st,d} + P_{f,d}$

= **31.58** bara

Differential Head

$\Delta P = P_d - P_s$ = **30.00** bara

$\Delta H = \Delta P / (\rho \times g)$ = **374.04** m liquid

Pump Hydraulic Power, P

$P = Q \times \Delta H \times \rho \times g$ = **4.58** kW

Pump Efficiency = **55.00** %

Pump Shaft Power = **8.33** kW

Văn bản này được xác thực tại https://eoffice.vietsov.com.vn với số định danh: 710/25-TT-XDM/NIPI

Appendix 1: **Drain Pump Sizing Calculation**

Equipment Tag name: **H-211**

Ref. P&ID No.: **BK1.BK10.BK10A-001-TS.BK10A-PR1-PID-007**

4. CALCULATION (cont)

			Line Description:			**Pump Suction**	**Pump Discharge**		
Possible Maximum Number of Pumps running at a time							**1**		
I. FLUID DETAILS									
Flowrate			Q	kg/h		4496	4496		
Flowrate			W	kg/s		1.25	1.25		
Fluid Density			ρ	kg/m^3		817.5	817.5		
Fluid Viscosity			μ	cP		4.64	4.64		
II. PIPE DETAILS									
Straight Length			L	m		3.0	30.0		Assumption
Roughness			e	m		0.000046	0.000046		
Nominal Diameter				inch		3	2		
Schedule						80	80		
Nonstandard Pipe ID				mm		N/A	N/A		
Pipe ID				mm		73.7	49.3		
III. FLOW SUMMARY									
Volumetric Flowrate			Q	Act m^3/h		5.50	5.50		
				Act m^3/s		0.00153	0.00153		
Velocity			V	m/s		0.359	0.802		
Reynolds Number			Re			4,656	6,964		
Friction Factor			f			0.0395	0.0357		
IV. FITTINGS									
Ball Valve	Reduced bore 40 mm and smaller			65 D					
	Reduced bore 50 mm and larger			45 D		1	2		
Gate Valve	Standard bore			13 D					
	Reduced bore 40 mm and smaller			65 D					
Globe Valve	Straight pattern			340 D					
	Y pattern			160 D					
	Angle pattern			145 D					
Check Valve	Swing type			135 D			1		
	Ball or piston type, 40 mm and smaller			340 D					
Plug Valve	Regular pattern			45 D					
Butterfly Valve	150 mm and larger			20 D					
Tee-equal	Flow straight through			20 D		2	2		
	Flow through side outlet			65 D			1		
Elbow	90°, R= 1 ½ D			20 D		3	3		
	45°, R= 1 ½ D			16 D					
Bend	90°, R= 4 D			14 D					
	90°, R= 5 D			16 D					
	180°, R= 4 D			25 D					
	180°, R= 5 D			28 D					
Strainer	Pump suction Y-type and bucket type			250 D		1			
Nozzle	Product Inlet Nozzle vessel/tank			64 D		1			
	Product Outlet Nozzle vessel/tank			32 D			1		
Equivalent Length of Fittings			ΣLeq, fittings	m		34.98	21.44		
Equivalent Length of Reducer			Leq, reducer	m		5.00			
Equivalent Length of Expander			Leq, expander	m			10.00		
Straight Pipe Length			Lpipe	m		3.00	30.00		Assumption
Design Margin			Ldesign	m		0.30	3.00		10% of Lpipe
Total Equivalent Length incl.of design margin			Leq, total	m		**43.28**	**64.44**		
V. PRESSURE DROP									
Other ΔP: Filter, Control Valve, Metering,…				kPa					
Pipe Pressure Drop			Ppipe	kPa/m		0.028	0.190		
				bar/km		0.28	1.90		
Total Pipe Pressure Drop			Ppipe	kPa		1.22	12.27		
TOTAL SYSTEM PRESSURE DROP				**kPa**		**1.22**	**12.27**		

Văn bản này được xác thực tại https://eoffice.vietsov.com.vn với số định danh: 710/25-TT-XDM/NIPI

FORMAT: A3

KEY PLAN

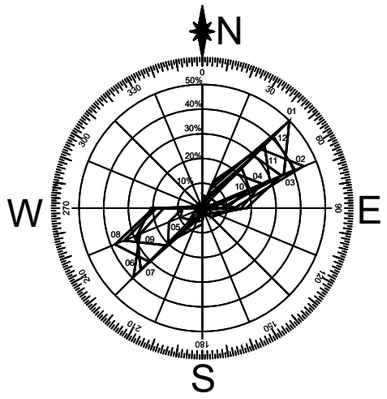

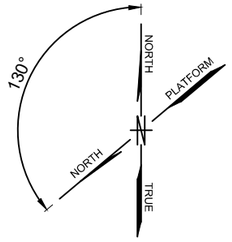

DRAWING INDEX			
No.	DRAWING No.	DESCRIPTION	REMARK
01	SHEET 1/6	GENERAL PLAN	-
02	SHEET 2/6	EQUIPMENT LAYOUT ON MAIN DECK EL.+15.000	-
03	SHEET 3/6	EQUIPMENT LAYOUT ON INTERMEDIATE DECK EL.+19.000	-
04	SHEET 4/6	EQUIPMENT LAYOUT ON UPPER DECK EL.+23.000	-
05	SHEET 5/6	EQUIPMENT ELEVATION LOOKING NORTH	
06	SHEET 6/6	EQUIPMENT ELEVATION LOOKING WEST	

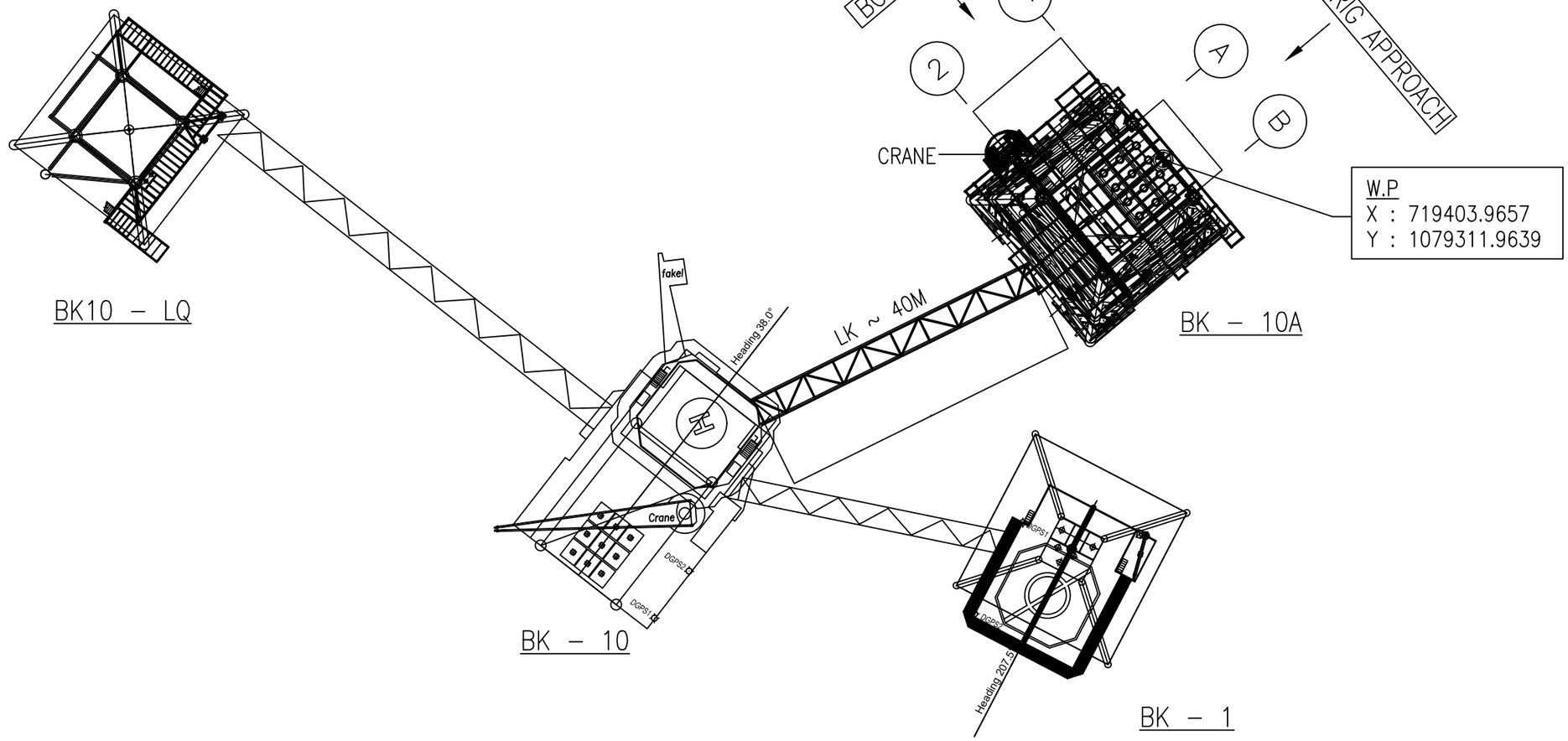

AGREED	AGREED	AGREED						
Signed by: Nguyễn Thành Trung Date: 10/07/2025 09:41:11 Certified by: Vietsovpetro CA	Signed by: Тихонов Антон Николаевич Date: 10.07.2025 10:30:42 Certified by: Vietsovpetro CA	Signed by: Bùi Thị Phương Thảo Date: 10/07/2025 07:27:59 Certified by: Vietsovpetro CA				Signed by: Lê Thị Hằng Date: 11/07/2025 07:35:33 Certified by: Vietsovpetro CA CONTROLLED	Signed by: Гайнутдинов Евгений Нурлыгалиевич Date: 11.07.2025 08:12:22 Certified by: Vietsovpetro CA	Signed by: Авдеев Андрей Сергеевич Date: 11.07.2025 09:30:35 Certified by: Vietsovpetro CA
STRUCTURE DEPT: N.T.TRUNG	EAC DEPT: TIKHONOV A.N.	SAFETY DEPT: B.T.P. THAO				DC: L.T. HANG	ENG.MGR: GAYNUTDINOV E.N.	PRO.MGR: AVDEEV A.S.
Signed by: Задернюк Михаил Евгеньевич Date: 10.07.2025 07:22:38 Certified by: Vietsovpetro CA	Signed by: Đỗ Xuân Long Date: 10/07/2025 07:29:29 Certified by: Vietsovpetro CA	Signed by: Phan Ngọc Quyết Date: 10/07/2025 15:53:45 Certified by: Vietsovpetro CA	0	IFA	04.07.2025	Signed by: Кудрицкий Илья Андреевич Date: 09.07.2025 10:21:25 Certified by: Vietsovpetro CA	Signed by: Костикин Виталий Николаевич Date: 09.07.2025 10:50:58 Certified by: Vietsovpetro CA	Signed by: Trương Minh Đức Date: 10/07/2025 07:15:10 Certified by: Vietsovpetro CA
HVAC DEPT: ZADERNIUK M.E.	MECHANICAL & UTILITY DEPT: D.X.LONG	ARCHITECTURE DEPT: P.N. QUYET	REV.	DES.	DATE	PREPARED: KUDRYTSKI I.A.	CHECKED: BOROZNA A.O./KOSTIKIN V. N.	DEPT.MGR: T.M. DUC

Signed by: Борозна Алексей Олегович
Date: 09.07.2025 17:44:53
Certified by: Vietsovpetro CA

RESEARCH AND ENGINEERING INSTITUTE FOR OFFSHORE OIL AND GAS

PROJECT: BK-10A WELLHEAD PLATFORM

DRAWING NO.: BK1.BK10.BK10A-001-TS.BK10A-PI1-LD-001

DRAWING TITLE: BK10A - EQUIPMENT LAYOUT

SCALE: -

SHEET: 1/6

PHASE: DE

10.BK10A-001-TS.BK10A-PI1-LD-001_0_Equipment Layout Drawing.dwg

Văn bản này được xác thực tại https://eoffice.vietsov.com.vn với số định danh: 670/25-CV-XDM/NIPI

FORMAT: A3

MAIN DECK (T.O.S. EL.+15.000)

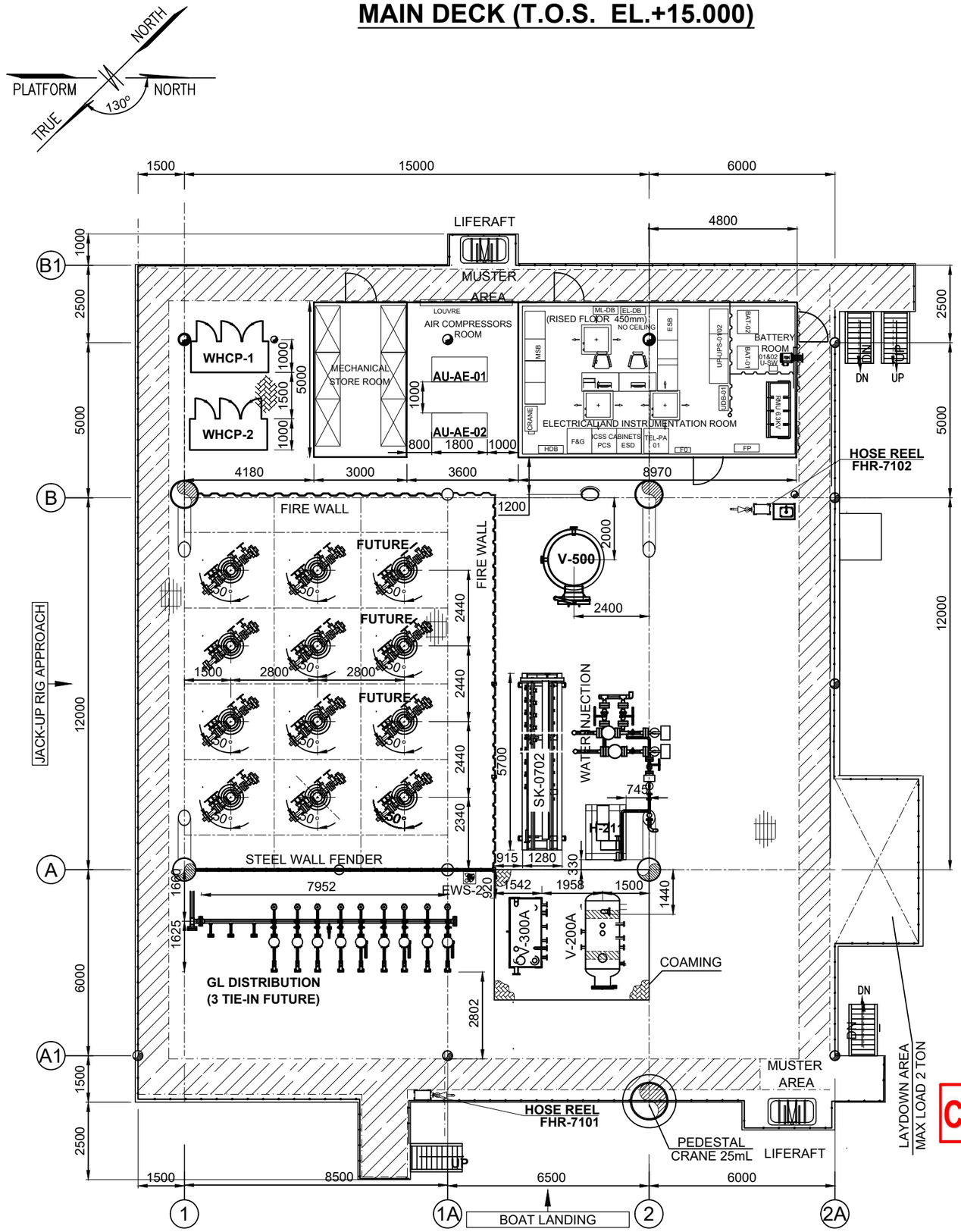

BK-10A - KEY ELEVATION

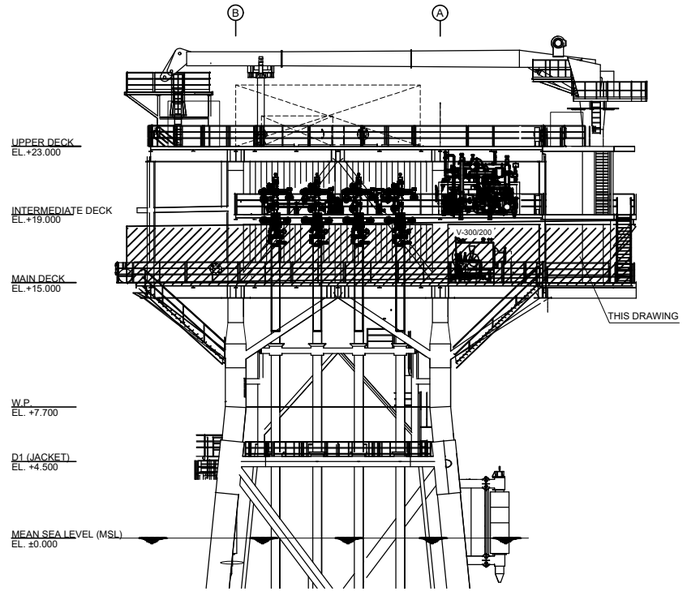

EQUIPMENT LIST

No.	TAG No	DESCRIPTION	SIZE (LmmxWmmxHmm)	WEIGHT (kg) DRY/OPER./TEST	REMARK
1	V-200A	VENT SCRUBBER / CLOSED DRAIN TANK	ID1100 x 2200TL/TL	1837 / 3562/ 4275	
2	H-211	DRAIN PUMP	1700 x 1200 x 980	824	
3	V-300A	OPEN DRAIN TANK	2200 x 1000 x 1100	1485.2	
4	-	LIFERAFT No.1	ID 675 X 1135 L	114	
5	-	LIFERAFT No.2	ID 675 X 1135 L	114	
6	WHCP-1	WELLHEAD CONTROL PANEL	2500x 1000 x2100	2000 / 2000	
7	WHCP-2	WELLHEAD CONTROL PANEL	2500x 1000 x2100	2000 / 2000	
8	SK-0702	CHEMICAL INJECTION PUMP SKID	5700x 1543 x1750	2560 / 3060 / 3200	
9		GASLIFT DISTRIBUTION (PIPING INCL.3 FUTURE WELLS)	7950x 1745 x1850	5760 / 5880 / 6120	
10	V-500	AIR RECEIVER TANK	ID1500 x 3800TL/TL	3760 / 3844 / 11360	
11	AU-AE-01	AIR COMPRESSOR SKID	970x 1766 x1800	700	
12	AU-AE-02	AIR COMPRESSOR SKID	970x 1766 x1800	700	

NOTES:
1. ALL DIMENSIONS, ELEVATIONS AND COORDINATES ARE IN MILLIMETERS (mm) UNLESS NOTED OTHERWISE.
2. ELEVATION IS BASED ON THE MEAN SEA LEVEL MSL+0.000. ELEVATION OF PIPING FROM CENTER OF PIPE.
3. REFER TO : ELECTRICAL MCT LAYOUT ON BK10A BK1.BK10.BK10A-001-TS.BK10A-ES2-LD-002
   SHELTER GENERAL LAYOUT BK1.BK10.BK10A-001-TS.BK10A-AR6-DW-002
   HVAC EQUIPMENT & DUCTING LAYOUT BK1.BK10.BK10A-001-TS.BK10A-VC6-LD-001
   EQUIPMENT LAYOUT FOR LSA, SAFETY & FIRE FIGHTING BK1.BK10.BK10A-001-TS.BK10A-SA6-LD-001

HOLD:
1. WAITING FOR VENDOR DATA.

LEGEND:
= PRIMARY ESCAPE ROUTE
= SECONDARY ESCAPE ROUTE
= GRATING
= PLATING
= FIRE WALL
= STEEL WALL FENDER

CONTROLLED

REV.	DES.	DATE
0	IFA	04.07.2025

Signed by: Костикин Виталий Николаевич
Date: 09.07.2025 10:50:58
Certified by: Vietsovpetro CA
CHECKED: KOSTIKIN V.N.

Signed by: Кудрицкий Илья Андреевич
Date: 09.07.2025 10:21:25
Certified by: Vietsovpetro CA
PREPARED: KUDRYTSKI I.A.

RESEARCH AND ENGINEERING INSTITUTE FOR OFFSHORE OIL AND GAS

PROJECT: BK-10A WELLHEAD PLATFORM

DRAWING NO.: BK1.BK10.BK10A-001-TS.BK10A-PI1-LD-001

DRAWING TITLE: BK10A - EQUIPMENT LAYOUT

SCALE: 1/150
SHEET: 2/6
PHASE: DE

10.BK10A-001-TS.BK10A-PI1-LD-001_0_Equipment Layout Drawing.dwg

Văn bản này được xác thực tại https://eoffice.vietsov.com.vn với số định danh: 670/25-CV-XDM/NIPI

FORMAT: A3

INTERMEDIATE DECK (T.O.S. EL.+19.000)

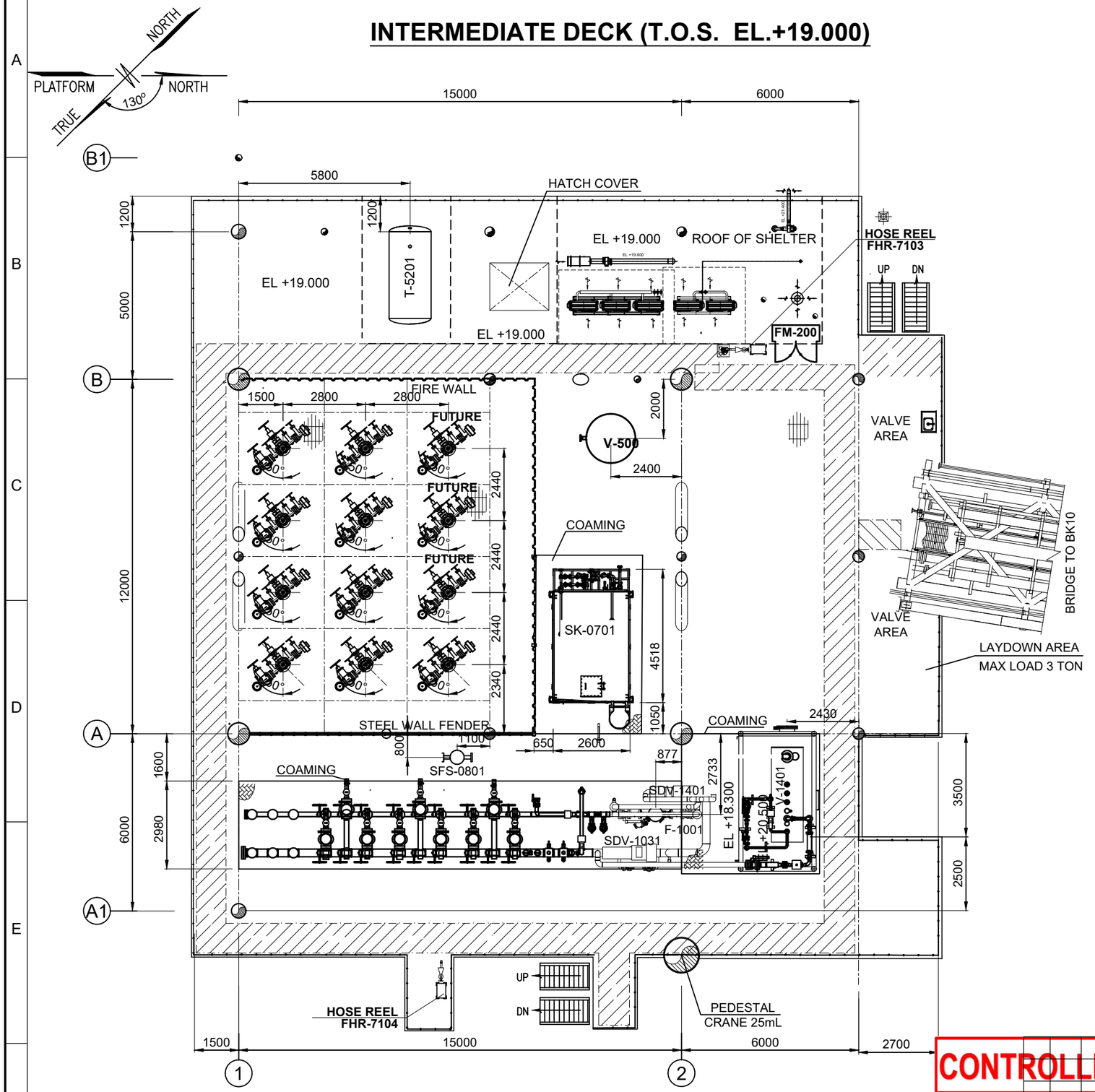

BK-10A - KEY ELEVATION

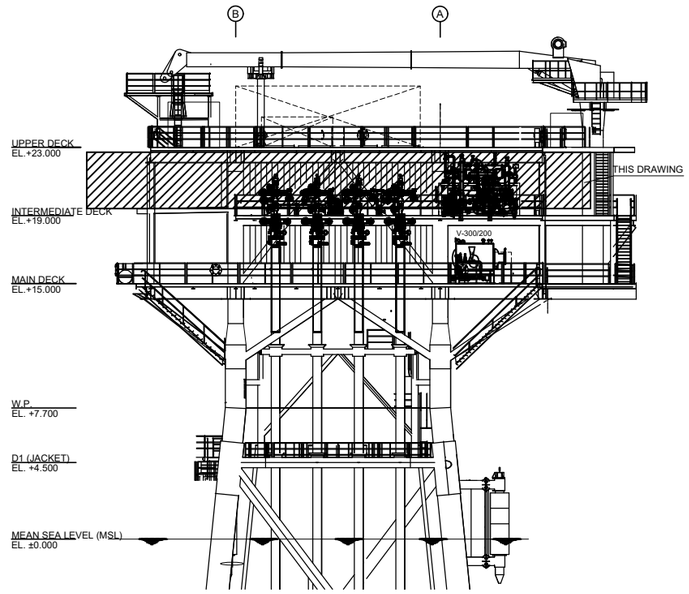

EQUIPMENT LIST

No.	TAG No.	DESCRIPTION	SIZE (LmmxWmmxHmm)	WEIGHT (kg) DRY/OPER./TEST	REMARK
1	F-1001	START-UP FILTER (BASKET TYPE)	700x 500 x1700	185/ 215/ 265	
2	V-1401	TEST SEPARATOR VESSEL	ID1350x 3200TL/TL	5215/ 6415/ 12715	
3	FM-200	FIRE EXTINGUISHING PACKAGE	1700x 500 x1720	1200	
4	SK-0701	DEPRESSANT STORAGE TANK	4520x 2570 x3560	6450/21900/23050	
5		INLET MANIFOLD (PIPING INCL. 3 FUTURE WELLS)	15723x 2980 x2300	16027/16598/16699	
6	SFS -0801	GASLIFT FILTER (BASKET TYPE)	1000x 350 x1940	467/ 497/ 547	
7	T-5201	FRESH WATER TANK	ID1420x 2880TL/TL	500/ 5500	

NOTES:
1. ALL DIMENSIONS, ELEVATIONS AND COORDINATES ARE IN MILLIMETERS (mm) UNLESS NOTED OTHERWISE.
2. ELEVATION IS BASED ON THE MEAN SEA LEVEL MSL+0.000. ELEVATION OF PIPING FROM CENTER OF PIPE.
3. REFER TO : ELECTRICAL MCT LAYOUT ON BK10A BK1.BK10.BK10A-001-TS.BK10A-ES2-LD-002
SHELTER GENERAL LAYOUT BK1.BK10.BK10A-001-TS.BK10A-AR6-DW-002
HVAC EQUIPMENT & DUCTING LAYOUT BK1.BK10.BK10A-001-TS.BK10A-VC6-LD-001
EQUIPMENT LAYOUT FOR LSA, SAFETY & FIRE FIGHTING BK1.BK10.BK10A-001-TS.BK10A-SA6-LD-001

HOLD:
1. WAITING FOR VENDOR DATA.

LEGEND:
= PRIMARY ESCAPE ROUTE
= GRATING
= FIRE WALL
= SECONDARY ESCAPE ROUTE
= PLATING
= STEEL WALL FENDER

CONTROLLED

Signed by: Костикин Виталий Николаевич
Date: 09.07.2025 10:50:58
Certified by: Vietsovpetro CA
CHECKED: KOSTIKIN V.N.

Signed by: Кудрицкий Илья Андреевич
Date: 09.07.2025 10:21:25
Certified by: Vietsovpetro CA
PREPARED: KUDRYTSKI I.A.

REV.	DES.	DATE
0	IFA	04.07.2025

RESEARCH AND ENGINEERING INSTITUTE FOR OFFSHORE OIL AND GAS

PROJECT: BK-10A WELLHEAD PLATFORM

DRAWING NO.: BK1.BK10.BK10A-001-TS.BK10A-PI1-LD-001

DRAWING TITLE: BK10A - EQUIPMENT LAYOUT

SCALE: 1/150
SHEET: 3/6
PHASE: DE

10.BK10A-001-TS.BK10A-PI1-LD-001_0_Equipment Layout Drawing.dwg

Văn bản này được xác thực tại https://eoffice.vietsov.com.vn với số định danh: 670/25-CV-XDM/NIPI

FORMAT: A3

UPPER DECK (T.O.S. EL.+23.000)

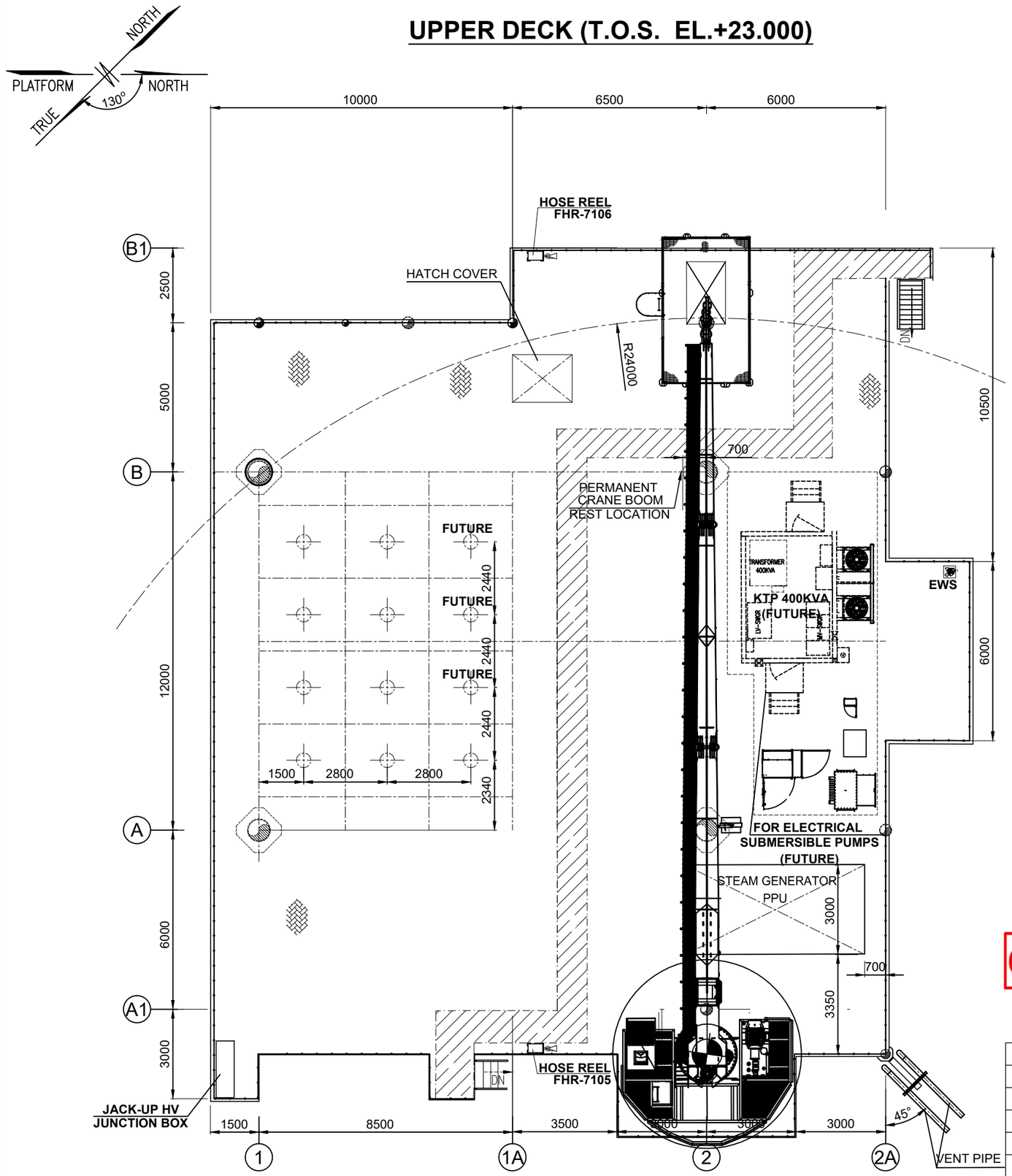

BK10A - KEY ELEVATION

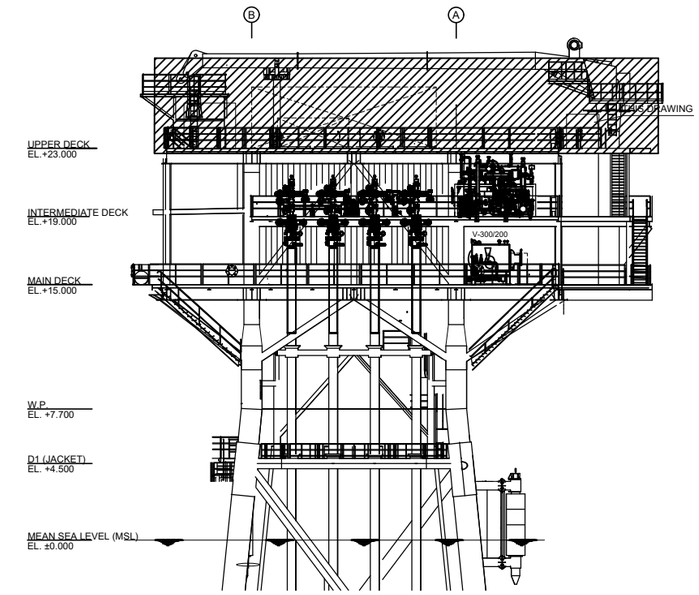

EQUIPMENT LIST

No.	TAG No.	DESCRIPTION	SIZE (LmmxWmmxHmm)	WEIGHT (kg) DRY/OPER./TEST	REMARK
1		CRANE	25mL	28Ton / 36 Ton	HOLD
2		STEAM GENERATOR PPU (FUTURE)	6020x3000x2700	7700 / 13000 / -	HOLD
3	KTP-400KVA	6.3/0.4KV 400KVA PACKAGE TRANSFORMER SUBSTATION (FUTURE)	4400x 3200 x3600	15000	HOLD
4		VSD CONTROL STATION 6 OR 12-PULSE (FUTURE)	1360x 1100 x2100	700	HOLD
5		STEP-UP TRANSFORMER, OIL-FILLED (FUTURE)	1600x 1400 x1300	2500	HOLD
6		ADVANCED UNIVERSAL HARMONIC FILTER 250HP (FUTURE)	900x 750 x1600	550	HOLD
7		HIGH VOLTAGE CHOKE UNIT (FUTURE)	400x 260 x680	40	HOLD
8		JACK-UP HV JUNCTION BOX	1900 x 600 x 2600	350	

NOTES:
1. ALL DIMENSIONS, ELEVATIONS AND COORDINATES ARE IN MILLIMETERS (mm) UNLESS NOTED OTHERWISE.
2. ELEVATION IS BASED ON THE MEAN SEA LEVEL MSL+0.000. ELEVATION OF PIPING FROM CENTER OF PIPE.
3. REFER TO : ELECTRICAL MCT LAYOUT ON BK10A BK1.BK10.BK10A-001-TS.BK10A-ES2-LD-002
   SHELTER GENERAL LAYOUT BK1.BK10.BK10A-001-TS.BK10A-AR6-DW-002
   HVAC EQUIPMENT & DUCTING LAYOUT BK1.BK10.BK10A-001-TS.BK10A-VC6-LD-001
   EQUIPMENT LAYOUT FOR LSA, SAFETY & FIRE FIGHTING BK1.BK10.BK10A-001-TS.BK10A-SA6-LD-001

HOLD:
1. WAITING FOR VENDOR DATA.

CONTROLLED

LEGEND:
= PRIMARY ESCAPE ROUTE
= GRATING
= FIRE WALL
= SECONDARY ESCAPE ROUTE
= PLATING
= STEEL WALL FENDER

REV.	DES.	DATE
0	IFA	04.07.2025

Signed by: Костикин Виталий Николаевич
Date: 09.07.2025 10:50:58
Certified by: Vietsovpetro CA
CHECKED: KOSTIKIN V.N.

Signed by: Кудрицкий Илья Андреевич
Date: 09.07.2025 10:21:25
Certified by: Vietsovpetro CA
PREPARED: KUDRYTSKI I.A.

RESEARCH AND ENGINEERING INSTITUTE FOR OFFSHORE OIL AND GAS

PROJECT: BK-10A WELLHEAD PLATFORM

DRAWING NO.: BK1.BK10.BK10A-001-TS.BK10A-PI1-LD-001

DRAWING TITLE: BK10A - EQUIPMENT LAYOUT

SCALE: 1/150
SHEET: 4/6
PHASE: DE

10.BK10A-001-TS.BK10A-PI1-LD-001_0_Equipment Layout Drawing.dwg

Văn bản này được xác thực tại https://eoffice.vietsov.com.vn với số định danh: 670/25-CV-XDM/NIPI

FORMAT: A3

BK10A EQUIPMENT ELEVATION LOOKING NORTH

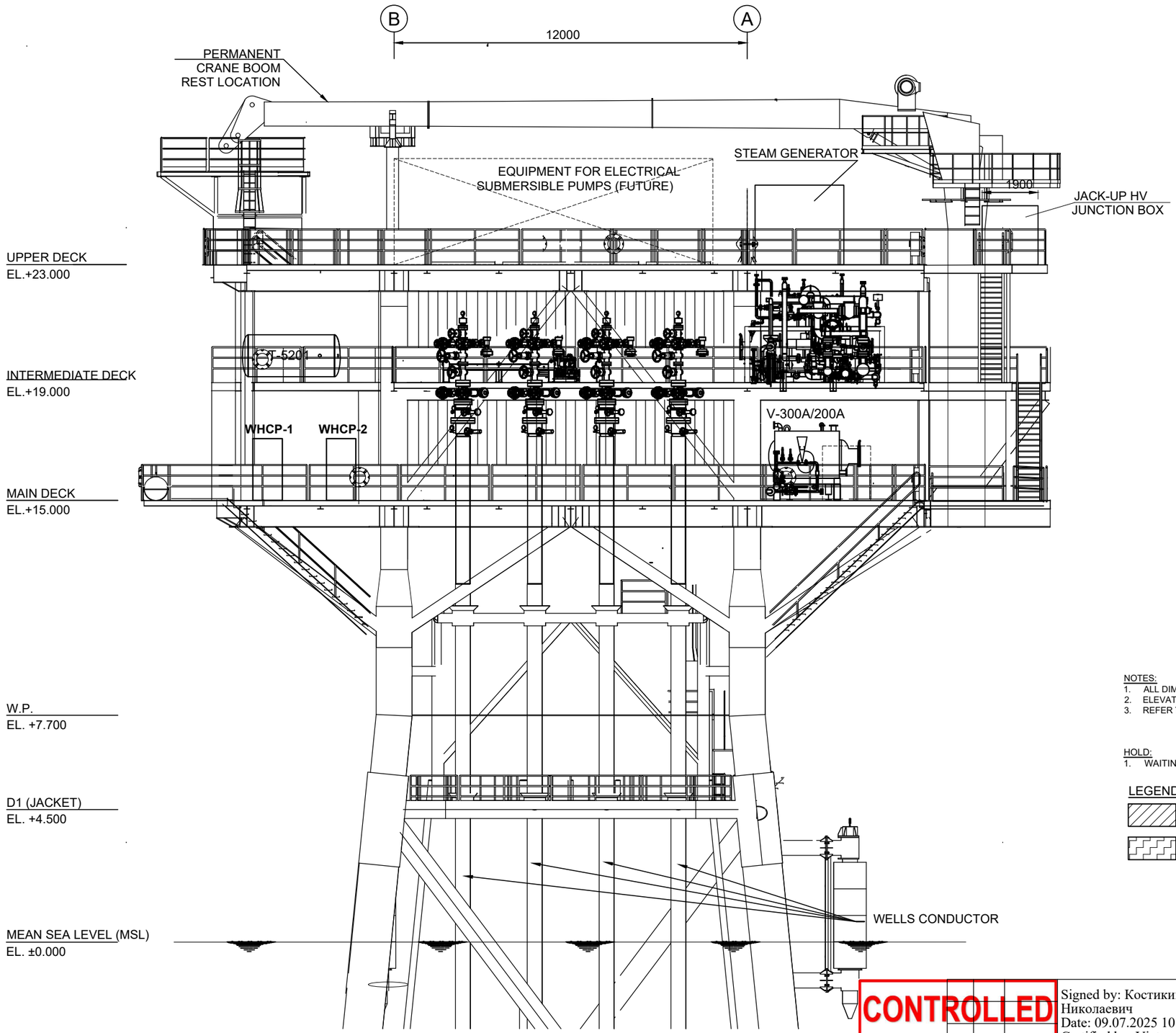

NOTES:
1. ALL DIMENSIONS, ELEVATIONS AND COORDINATES ARE IN MILLIMETERS (mm) UNLESS NOTED OTHERWISE.
2. ELEVATION IS BASED ON THE MEAN SEA LEVEL MSL+0.000. ELEVATION OF PIPING FROM CENTER OF PIPE.
3. REFER TO : ELECTRICAL MCT LAYOUT ON BK10A BK1.BK10.BK10A-001-TS.BK10A-ES2-LD-002
   SHELTER GENERAL LAYOUT BK1.BK10.BK10A-001-TS.BK10A-AR6-DW-002
   HVAC EQUIPMENT & DUCTING LAYOUT BK1.BK10.BK10A-001-TS.BK10A-VC6-LD-001
   EQUIPMENT LAYOUT FOR LSA, SAFETY & FIRE FIGHTING BK1.BK10.BK10A-001-TS.BK10A-SA6-LD-001

HOLD:
1. WAITING FOR VENDOR DATA.

LEGEND:

= PRIMARY ESCAPE ROUTE
= SECONDARY ESCAPE ROUTE
= GRATING
= PLATING
= FIRE WALL
= STEEL WALL FENDER

CONTROLLED

Signed by: Костикин Виталий Николаевич
Date: 09.07.2025 10:50:58
Certified by: Vietsovpetro CA

CHECKED: KOSTIKIN V.N.

Signed by: Кудрицкий Илья Андреевич
Date: 09.07.2025 10:21:25
Certified by: Vietsovpetro CA

PREPARED: KUDRYTSKI I.A.

REV.	DES.	DATE
0	IFA	04.07.2025

RESEARCH AND ENGINEERING INSTITUTE
FOR OFFSHORE OIL AND GAS

PROJECT: BK-10A WELLHEAD PLATFORM

DRAWING NO.: BK1.BK10.BK10A-001-TS.BK10A-PI1-LD-001

DRAWING TITLE: BK10A - EQUIPMENT LAYOUT

SCALE: 1/150
SHEET: 5/6
PHASE: DE

10.BK10A-001-TS.BK10A-PI1-LD-001_0_Equipment Layout Drawing.dwg

Văn bản này được xác thực tại https://eoffice.vietsov.com.vn với số định danh: 670/25-CV-XDM/NIPI

FORMAT: A3

BK10A EQUIPMENT ELEVATION LOOKING WEST

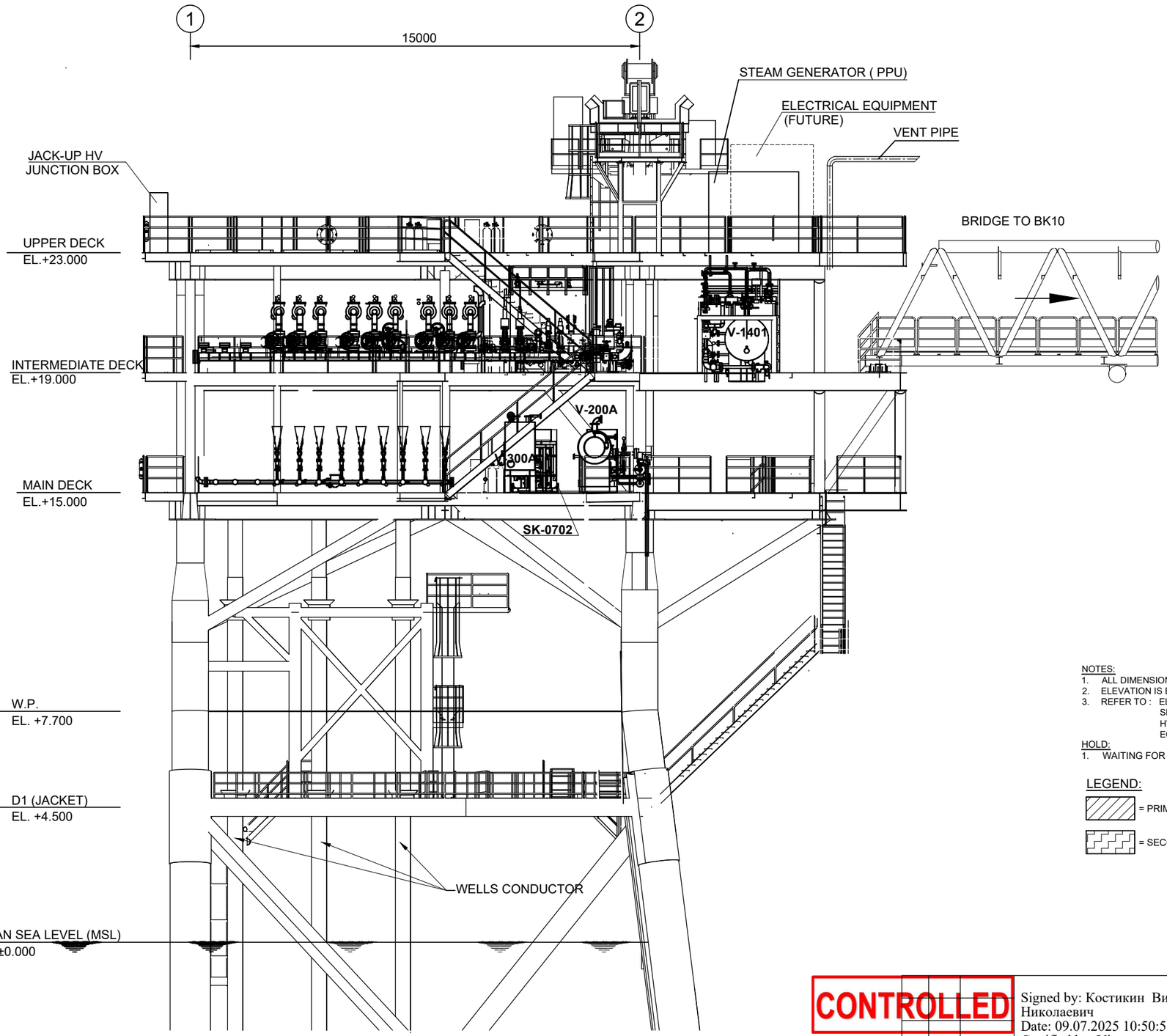

NOTES:
1. ALL DIMENSIONS, ELEVATIONS AND COORDINATES ARE IN MILLIMETERS (mm) UNLESS NOTED OTHERWISE.
2. ELEVATION IS BASED ON THE MEAN SEA LEVEL MSL+0.000. ELEVATION OF PIPING FROM CENTER OF PIPE.
3. REFER TO : ELECTRICAL MCT LAYOUT ON BK10A BK1.BK10.BK10A-001-TS.BK10A-ES2-LD-002
   SHELTER GENERAL LAYOUT BK1.BK10.BK10A-001-TS.BK10A-AR6-DW-002
   HVAC EQUIPMENT & DUCTING LAYOUT BK1.BK10.BK10A-001-TS.BK10A-VC6-LD-001
   EQUIPMENT LAYOUT FOR LSA, SAFETY & FIRE FIGHTING BK1.BK10.BK10A-001-TS.BK10A-SA6-LD-001

HOLD:
1. WAITING FOR VENDOR DATA.

LEGEND:

= PRIMARY ESCAPE ROUTE
= GRATING
= FIRE WALL
= SECONDARY ESCAPE ROUTE
= PLATING
= STEEL WALL FENDER

CONTROLLED

REV.	DES.	DATE	
0	IFA	04.07.2025	Signed by: Костикин Виталий Николаевич Date: 09.07.2025 10:50:58 Certified by: Vietsovpetro CA CHECKED: KOSTIKIN V.N. Signed by: Кудрицкий Илья Андреевич Date: 09.07.2025 10:21:25 Certified by: Vietsovpetro CA PREPARED: KUDRYTSKI I.A.

RESEARCH AND ENGINEERING INSTITUTE FOR OFFSHORE OIL AND GAS

PROJECT: BK-10A WELLHEAD PLATFORM

DRAWING NO.: BK1.BK10.BK10A-001-TS.BK10A-PI1-LD-001

DRAWING TITLE: BK10A - EQUIPMENT LAYOUT

SCALE: 1/150
SHEET: 6/6
PHASE: DE

10.BK10A-001-TS.BK10A-PI1-LD-001_0_Equipment Layout Drawing.dwg

Văn bản này được xác thực tại https://eoffice.vietsov.com.vn với số định danh: 670/25-CV-XDM/NIPI

RESEARCH AND ENGINEERING INSTITUTE FOR OFFSHORE OIL AND GAS

PROJECT NAME : BK-10A WELLHEAD PLATFORM

DOCUMENT TITLE : PIPING MATERIAL CLASS SPECIFICATION

DOCUMENT NO. : BK1.BK10.BK10A-001-GE-PI1-SP-001

PHASE : DE

Signed by: Борозна Алексей Олегович
Date: 30.06.2025 13:47:58
Certified by: Vietsovpetro CA

Applied Document			VSP-NIPI-TYP-TS-PI1-SP-01		Rev.	0
			CONTROLLED			
			Signed by: Lê Thị Hằng Date: 30/06/2025 16:15:11 Certified by: Vietsovpetro CA	Signed by: Гайнутдинов Евгений Нурлыгалиевич Date: 30.06.2025 17:44:47 Certified by: Vietsovpetro CA	Signed by: Авдеев Андрей Сергеевич Date: 30.06.2025 17:56:31 Certified by: Vietsovpetro CA	
			DC: L.T. HANG	**ENG.MGR: GAYNUTDINOV E.N.**	**PRO.MGR: AVDEEV A.S.**	
0	IFA	25.06.25	Signed by: Кудрицкий Илья Андреевич Date: 25.06.2025 13:49:21 Certified by: Vietsovpetro CA	Signed by: Костикин Виталий Николаевич Date: 26.06.2025 20:03:04 Certified by: Vietsovpetro CA	Signed by: Trương Minh Đức Date: 30/06/2025 14:02:51 Certified by: Vietsovpetro CA	
REV.	**DES.**	**DATE**	**PREPARED: KUDRYTSKI I.A.**	**CHECKED: BOROZNA A.O./KOSTIKIN V. N.**	**DEPT.MGR: T.M. DUC**	

Văn bản này được xác thực tại https://eoffice.vietsov.com.vn với số định danh: 627/25-CV-XDM/NIPI

TRACK CHANGES

No	Rev.	Content of Change	Note

Văn bản này được xác thực tại https://eoffice.vietsov.com.vn với số định danh: 627/25-CV-XDM/NIPI

TABLE OF CONTENTS

1 INTRODUCTION 4

2 ADDENDUM 4

Văn bản này được xác thực tại https://eoffice.vietsov.com.vn với số định danh: 627/25-CV-XDM/NIPI

1. INTRODUCTION

BK-10A Wellhead Platform belongs to Vietsovpetro JV. It will be located in Block 09-1, White Tiger oil field, offshore the Socialist Republic of Vietnam.

BK-10A is connected with BK-10 by a linking bridge. BK-10A is an unmanned platform with 12 slots (03 spare slots) and will be remotely controlled from the host platform BK-10 via fiber optic cable.

There will be 09 production wells on BK-10A (02 wells will be converted into water injection wells in future as planned) and 03 wells can be added in the future.

Based on the criterion of the need for production and maximizing the return on investment, BK-10A will be considered to have the minimum facilities. The full well stream of BK-10A will be gathered together with the produced fluid of BK-10 and BK-1, preliminarily separated on BK-10 and then transferred to CPP-2.
The scope of this project is detailed engineering design for the BK-10A Wellhead Platform, Linking Bridge and modification of BK-10.

Location of BK-10A and related platforms as below.

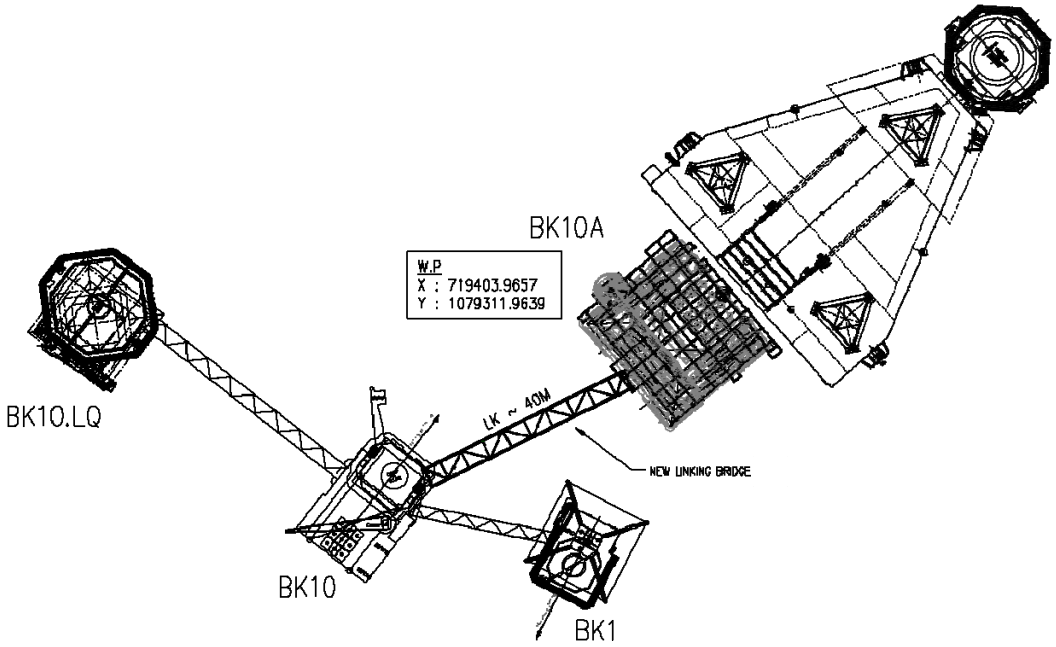

Figure 1: Location of the BK-10A Wellhead Platform and related platforms

2. ADDENDUM

This document uses the Typical Engineering Documentation for this Project. However, some design intends or requirements may require to be revised to fit with Project's purpose. This section lists changes in the applied typical documents, originating in Typical Engineering Documentation for any reason including those indicated in Table 1. These changes are identified in this Addendum to the applied

Văn bản này được xác thực tại https://eoffice.vietsov.com.vn với số định danh: 627/25-CV-XDM/NIPI

typical document, identifying the document and section affected and the required change.

VENDOR shall review the required changes in conjunction with the referenced document and project's engineering documents.

The type of modification shall be defined and indicated in subsequent text as follows:

- ✓ "ADD" - Indicates the following statement(s) is/are added to the Company referenced text.
- ✓ "DELETE" - Indicates the following statement(s) is/are deleted from the Company referenced text.
- ✓ "REPLACE WITH" - Indicates the following statement(s) is/are revision(s) to the Company referenced text.

Section	Current Statement or Requirement	Revised to

Note:

No changes need to be made

Văn bản này được xác thực tại https://eoffice.vietsov.com.vn với số định danh: 627/25-CV-XDM/NIPI

VIETSOVPETRO

RESEARCH AND ENGINEERING INSTITUTE FOR OFFSHORE OIL AND GAS

VIETSOVPETRO
RESEARCH & ENGINEERING INSTITUTE

AGREED BY
Deputy General Director of Vietsovpetro

Tran Xuan Hoang

04/ 03 /2021

APPROVED BY
Chief Engineer of Vietsovpetro

Tran Van Vinh

05/ 02 /2021

TYPICAL ENGINEERING DOCUMENTATION

DOCUMENT TITLE : PIPING MATERIAL CLASS SPECIFICATION

DOCUMENT NO. : VSP-NIPI-TYP-TS-PI1-SP-01

AGREED:	Name	Date
Capital Construction Department		26/2/21
Technical Production Department		23.02.2021
Material and Equipment Department	C.N.Hồ	18.02.2021

CONTROLLED

REV.	DES.	DATE	PREPARED	CHECKED	DEPART. MANAGER	ENG. MANAGER	PRO. MANAGER
0	IFA	26/01/21	N.V.THANG	L.T.DUONG	N.T.HAI	T.D.HAI	B.T.HAN

Văn bản này được xác thực tại https://eoffice.vietsov.com.vn với số định danh: 627/25-CV-XDM/NIPI

Change Log

REV	SECTION	PAGE	CHANGE DESCRIPTION

Văn bản này được xác thực tại https://eoffice.vietsov.com.vn với số định danh: 627/25-CV-XDM/NIPI

Reference Documents

No.	Document No.	Document Title
1	VSP-NIPI-TYP-TS-PI1-CA-01	Pipe Wall Thickness Calculation
2	VSP-NIPI-TYP-TS-PI1-SP-02	Specification for Manual Valves
3	VSP-NIPI-TYP-GEN-AC7-SP-01	Painting Specification for Platform
4	VSP-NIPI-TYP-GEN-AC7-SCH-01	Basic Painting Schedule for Platform

Văn bản này được xác thực tại https://eoffice.vietsov.com.vn với số định danh: 627/25-CV-XDM/NIPI

TABLE OF CONTENTS

1. GENERAL 5
1.1 Introduction 5
1.2 Purpose of Document 5
1.3 Units 5
1.4 Definition of Terms 5
1.5 Abbreviations 5
2. APPLICABLE CODES, STANDARDS AND REGULATIONS 7
2.1 Compliance with Specification 7
2.2 Regulations 7
2.3 Quality Assurance 7
2.4 Conflicts and Order of Precedence 8
2.5 Codes and Standards 8
3. GENERAL REQUIREMENTS 12
3.1 Requirements for Pipes 13
3.2 Requirements for Fittings 15
3.3 Requirements for Flanges 16
3.4 Requirements for Bolting 18
3.5 Requirements for Gaskets 19
3.6 Valves 19
4. MATERIALS 19
4.1 General Material Requirements 19
4.2 Carbon Steel 20
4.3 Austenitic Stainless Steel 21
4.4 Cu-Ni 21
4.5 GRE 21
4.6 CPVC and PP-R 22
5. MARKING AND IDENTIFICATION 22
6. INSPECTION, TESTING AND CERTIFICATION 22
7. PIPING CLASS IDENTIFICATION 24
8. PIPING MATERIAL SPECIFICATION/ CLASS INDEX 25
9. VALVE NUMBER CODING SYSTEM 34
10. LIST OF APPENDICES 38

Văn bản này được xác thực tại https://eoffice.vietsov.com.vn với số định danh: 627/25-CV-XDM/NIPI

1. GENERAL

1.1 Introduction

The typical engineering documentation is a set of engineering documents issued by Research and Engineering Institute (R&EI) that can be applied repeatly to many projects that R&EI involves.

The typical engineering documentation shall be agreed by related departments in Vietsovpetro and approved by Vietsovpetro, if any.

1.2 Purpose of Document

This specification defines the minimum requirements for piping materials of process and utility piping systems in the Vietsovpetro offshore facilities, and is to be used tin conjunction with the data sheets, drawings, related specifications, referenced international codes and standards. It follows the intent of ASME B31.3/ ASME B31.4/ ASME B31.8 for all piping facility.

TheVENDOR shall ensure that all materials, equipment and services supplied meet the requirements of this specification and of the codes, standards and specifications nominated herein.

1.3 Units

All units shall be expressed in SI (for ease of the users).

All piping sizes shall be expressed by nominal pipe sizes NPS – Inch unless otherwise noted

All unit of pressure given in this standard are gauge pressure, unless otherwise stated.

1.4 Definition of Terms

The following terms as used in this specification, assume the meanings given below:

COMPANY	**VIETSOVPETRO JOINT VENTURE (VSP),** as the project developer and ultimate owner of the facility.
CONTRACTOR	A Contractor working under direct contract with VSP
SUB-CONTRACTOR	Obtained by a prime contractor for subcontracting works
VENDOR	Party responsible for manufacturing and/or packaging of equipment.
SUB-VENDOR	Other entity employed by Vendor to perform work and/or supply equipment.
MANUFACTURER	The company or its sub-contractors selected by the Company as Manufacturer of said material

1.5 Abbreviations

ASME	American Society of Mechanical Engineers
API	American Petroleum Institute
ASTM	American Society for Testing and Materials
BS	British Standards
BE	Beveled End
BW	Butt Welding

Văn bản này được xác thực tại https://eoffice.vietsov.com.vn với số định danh: 627/25-CV-XDM/NIPI

BHN	Brinell Hardness
C. A	Corrosion Allowance
CS	Carbon Steel
CORR.	Corrosion
CONC./ ECC.	Concentric/ Eccentric
DBB	Double Block & Bleed Valve
EEMUA	Engineering Equipment & Materials User's Association
ERW	Electric Resistance Welded
FF/RF/RTJ	Flat Face/ Raised Face/ Ring Type Joint
FNPT	Female Threading as per ASME B1.20.1
Galv.	Galvanized
GR.	Grade
ISO	International Standardization Organization
LR	Long Radius
LTCS	Carbon Steel Low Temperature
MSS	Manufacturers Standardization Society
MNPT	Male Threading as per ASME B1.20.1
NA	Not applicable
NPT	National Pipe Thread
NPS/ DN	Nominal Pipe Size/ Diameter Nominal
NDT	Non-Destructive Testing
OD	Outside Diameter
OS & Y	Outside Screw and Yoke
P&ID	Piping and Instruments Diagram
PP-R	Polypropylene Random
PTFE/ RPTFE	Poly Tetra Fluoro Ethylene / Reinforced Poly Tetra Fluoro Ethylene
PBE	Plain both ends
PE	Plain End
POE	Plain One End
PSE	Plain Small End
PR1	Performance Requirement level 1
PR2	Performance Requirement level 2
PSL	Product Specification Level

Văn bản này được xác thực tại https://eoffice.vietsov.com.vn với số định danh: 627/25-CV-XDM/NIPI

SS	Stainless Steel
SAW	Submerged Arc Welded
SCH	Schedule
SPW	Spiral wound
STD	Standard (wall thickness)
S.O	Slip-On
SI	System International
SMLS	Seamless
SW	Socket Welding
SBB	Single Block & Bleed Valve
THK	Thickness
THR'D	Threaded End
TOE	Thread One End
WN	Welding Neck

2. APPLICABLE CODES, STANDARDS AND REGULATIONS

2.1 Compliance with Specification

Data Sheets, references and related documents included in the Purchase Requisition are an integral part of this document and as such shall be used in conjunction with this Specification.

2.2 Regulations

All piping materials shall comply with the relevant Vietnamese and international recommendations. The VENDOR shall determine what valve requires type approval by the local Vietnamese Authority and shall provide type approved equipment where necessary.

2.3 Quality Assurance

The manufacturer shall operate a quality system which ensure that the requirements of this Standard are achieved.

Manufacturer shall demonstrate compliance by providing a copy of the accredited certificate or manufacturer's quality manual.

The design, material, and workmanship employed throughout the course of the project shall be of high quality and based on the principles of ISO 9001 or equivalent standards. The VENDOR is required to operate an ISO 9001 or equivalent quality assurance system, which shall be subjected to continuous monitoring by the COMPANY.

The VENDOR shall submit with Bid, a detailed inspection and test plan specific to this scope for the review and approval of the COMPANY.

Văn bản này được xác thực tại https://eoffice.vietsov.com.vn với số định danh: 627/25-CV-XDM/NIPI

2.4 Conflicts and Order of Precedence

In case of conflict, the regulations, codes, standards and other documents referenced shall be applied in the following priority order:

- Vietnamese Government Legislation
- Project Specifications, Datasheet.
- Industry Standards
- VENDOR Codes and Working Standards

In case of conflict or discrepancies between any valves of the above codes and standards and these technical specifications, the more stringent shall apply.

All piping materials supplied shall meet the contract-specified requirements and the manufacturers' published specifications. In the event of conflict, the more stringent shall govern unless mutually agreed otherwise, by the COMPANY and the VENDOR.

2.5 Codes and Standards

All piping components specified in the piping class shall be in accordance with all applicable section of the latest edition of the following codes, standards, regulations and project specifications.

American Society of Mechanical Engineers (ASME)	
ASME B1.1	Unified Screw Threads
ASME B1.20.1	Pipe Threads
ASME B16.5	Pipe Flanges and Flanged Fittings
ASME B16.9	Factory Made Wrought Steel Butt-Welding Fittings
ASME B16.10	Face to Face and End to End Dimensions of Valves
ASME B16.11	Forged Fittings, Socket Welding and Threaded
ASME B16.20	Metallic Gaskets for Pipe Flanges
ASME B16.21	Non Metallic Flat Gaskets for Pipe Flanges
ASME B16.25	Butt welding Ends
ASME B16.34	Valves, Flanged Threaded and Welding End
ASME B16.47	Large Diameter Steel Flanges
ASME B16.48	Steel Line Blanks
ASME B18.2.1	Square and Hexagonal Bolts and Screws
ASME B18.2.2	Square and Hexagonal Nuts
ASME B31.3	Process Piping
ASME B31.4	Pipeline Transportation Systems for Liquid Hydrocarbons and other Liquids
ASME B31.8	Gas Transmission and Distribution Piping Systems

Văn bản này được xác thực tại https://eoffice.vietsov.com.vn với số định danh: 627/25-CV-XDM/NIPI

ASME B36.10	Welded and Seamless Wrought Steel Pipe
ASME B36.19	Stainless Steel Pipe
American Society for Testing Material (ASTM)	
ASTM A105	Standard Specification for Carbon Steel Forgings for Piping Applications
ASTM A106	Standard Specification for Carbon Steel Pipe for High-Temperature Service
ASTM A153	Standard Specification for Zinc Coating (Hot-Dip) on Iron and Steel Hardware
ASTM A182	Standard Specification for Forged or Rolled Alloy and Stainless Steel Pipe Flanges, Forged Fittings, and Valves and Parts for High-Temperature Service
ASTM A193	Standard Specification for Alloy-Steel and Stainless Steel Bolting Materials for High Temperature or High Pressure Service
ASTM A194	Standard Specification for Carbon and Alloy Steel Nuts for Bolts for High Pressure or High Temperature Service, or Both
ASTM A216	Standard Specification for Steel Casting, Carbon, Suitable for Fusion Welding, for high-Temperature Service.
ASTM A234	Standard Specification for Piping Fittings of Wrought Carbon Steel and Alloy Steel for Moderate and Elevated Temperatures
ASTM A240	Standard Specification for Chromium and Chromium-Nickel Stainless Steel Plate, Sheet, and Strip for Pressure Vessels and for General Applications
ASTM A312	Standard Specification for Seamless, Welded, and Heavily Cold Worked Austenitic Stainless Steel Pipes
ASTM A320	Standard Specification for Alloy-Steel and Stainless Steel Bolting Materials for Low- Temperature Service
ASTM A333	Standard Specification for Seamless and Welded Steel Pipe for Low Temperature Service
ASTM A350	Standard Specification for Carbon and Low-Alloy Steel Forgings, Requiring Notch Toughness Testing for Piping Components
ASTM A358	Standard Specification for Electric-Fusion-Welded Austenitic Chromium-Nickel Stainless Steel Pipe for High-Temperature Service and General Applications
ASTM A403	Standard Specification for Wrought Austenitic Stainless Steel Piping Fittings

Văn bản này được xác thực tại https://eoffice.vietsov.com.vn với số định danh: 627/25-CV-XDM/NIPI

ASTM A420	Standard Specification for Wrought Carbon and Alloy Steel Piping Fittings for Low Temperature Service
ASTM A450	Standard Specification for General Requirements for Carbon, Ferritic Alloy, and Austenitic Alloy Steel Tubes
ASTM A516	Standard Specification for Pressure Vessel Plates, Carbon Steel, for Moderate- and Lower-Temperature Service
ASTM A530	Standard Specification for General Requirements for Specialized Carbon and Alloy Steel Pipe
ASTM A694	Standard Specification for Carbon and Alloy Steel Forgings for Pipe Flanges, Fittings, Valves, and parts for High-Pressure Transmission Service
ASTM A860	Standard Specification for Wrought High-Strength Low-Alloy Steel Butt-Welding Fittings
ASTM B466	Seamless Copper-Nickel Pipe and Tube
ASTM B633	Electrodeposited Coatings of Zinc on Iron and Steel
ASTM B88	Standard Specification for Seamless Copper Water Tube
ASTM D1784	Standard Specification for Rigid Poly(Vinyl Chloride) (PVC) Compounds and Chlorinated Poly(Vinyl Chloride) (CPVC) Compounds
ASTM D1785	Standard Specification for Poly(Vinyl Chloride) (PVC) Plastic Pipe, Schedules 40, 80 and 120
ASTM D2466	Standard Specification for Poly(Vinyl Chloride) (PVC) Plastic Pipe Fittings, Schedule 40
ASTM D2996	Standard Specification for Filament-Wound "Fiberglass (Glass-Fiber-Reinforced Thermosetting-Resin) Pipe
ASTM F1428	Standard Specification for Aluminum Particle-Filled Base Coat/ Organic of Inorganic Topcoat, Corrosion Protective Coatings for Fasteners.
ASTM F441	Standard Specification for Chlorinated Poly (Vinyl Chloride) (CPVC) Plastic Pipe, Schedules 40 and 80
ASTM F438	Standard Specification for Socket-Type Chlorinated Poly(Vinyl Chloride) (CPVC) Plastic Pipe Fittings, Schedule 40
ASTM F439	Standard Specification for Chlorinated Poly (Vinyl Chloride) (CPVC) Plastic Pipe Fittings, Schedule 80
German Institute for Standardization	
DIN 8077	Polypropylene (PP) pipes - PP-H, PP-B, PP-R, PP-RCT - dimensions

Văn bản này được xác thực tại https://eoffice.vietsov.com.vn với số định danh: 627/25-CV-XDM/NIPI

DIN 8078	Polypropylene (PP) pipes - PP-H, PP-B, PP-R, PP-RCT - general quality
DIN 16962	Pipe joints and fittings for pressure systems of polypropylene (PP)
American Petroleum Institute (API)	
API 5L	Specification for Line Pipe
API 6D	Specification for Pipeline Valves
API 6FA	Fire Test for Valves
API 594	Check Valves : Wafer, Wafer-Lug and Double Flanged Type
API 598	Valve Inspections and Testing
API 600	Steel Gate Valves – Flanged and Butt-Welding Ends, Bolted and Pressure Seal Bonnets
API 602	Compact Steel Gate Valves – Flanged, Threaded, Welding, and Extended – Body ends
API 607	Fire Test for Soft Seated Quarter Turn Valves
API 608	Metal Ball Valves-Flanged, Threaded and Welding Ends
API 609	Butterfly Valves Double Flanged, Lug and Wafer Type
API RP 14E	Recommended Practice for Design and Installation of Offshore Production Platform Piping Systems
API RP 14G	Recommended Practice for Fire Prevention and Control on open Type Offshore Production Platforms
British Standards	
BS 5146	Specification for Inspection and Test of Steel Valves
BS 5154	Copper and Alloy Globe, Globe Stop and Check, Check and Gate Valves
Manufacturer's Standardization Society (MSS)	
MSS SP 6	Standard Finishes for Contact Faces of Pipe Flanges and Connecting End Flanges of Valves and Fittings.
MSS SP 25	Standard Marking System for Valves, Fittings, Flanges and Unions
MSS SP 44	Steel Pipeline Flanges
MSS SP 53	Quality Standard for Steel Casting – Radiographic Examination Method
MSS SP 55	Quality Standard for Steel Castings – Visual Examination Method

Văn bản này được xác thực tại https://eoffice.vietsov.com.vn với số định danh: 627/25-CV-XDM/NIPI

MSS SP 75	Specification for High-Test, Wrought, Butt-Welding Fittings
MSS SP 80	Bronze Gate, Globe and Check Valves
MSS SP 83	Class 3000 Steel Pipe Unions Socket Welding and Threaded
MSS SP 95	Swage(d) Nipples and Bull Plugs
MSS SP 97	Integrally Reinforced Forged Branch Outlet Fittings-Socket Welding, Threaded, and Butt Welding Ends
Euronorm Standards (EN)	
EN 10204	Metallic Products, types of Inspection Documents
Engineering Equipment and Materials Users Association (EEMUA)	
EEMUA 144	90/10 Copper Nickel Alloy Piping for Offshore Applications. Specification: Tubes - Seamless and Welded
EEMUA 145	90/10 Copper Nickel Alloy Piping for Offshore Applications. Specification: Flanges Composite and Solid
EEMUA 146	90/10 Copper Nickel Alloy Piping for Offshore Applications. Specification: Fittings

3. GENERAL REQUIREMENTS

The calculation of pipe wall thickness shall be as VSP-NIPI-TYP-TS-PI1-CA-01.

Mill tolerances used for calculation of pipe thicknesses shall be 12.5% regardless of pipe size

unless otherwise accepted by Company

Pipe, valves and fittings in sizes: 1/4 in, 3/8 in, 1.1/4 in, 3.1/2 in, 5 in, 7 in, 9 in and 22 in shall not be used. Where a vendor normally provides equipment with connections in any of the above sizes, connections will be made with suitable swages or reducers to pipe of approved size.

Threaded joints are only permitted for instrument and tubing connections and bleed ring for upstream / downstream of piping isolation valves. The use of threaded joints shall be kept to a minimum

Threads for screwed pipes, fittings, flanges and valves shall be in accordance with ASME B1.20.1 taper threads.

Miter bends shall not be used except where specifically agreed by the Company. In case such an agreement is given, a re-run of the flexibility analysis of the corresponding line is necessary.

The use of spectacle blinds, spade/spacers shall follow table given below unless otherwise specified:

Văn bản này được xác thực tại https://eoffice.vietsov.com.vn với số định danh: 627/25-CV-XDM/NIPI

SIZE (NPS)	150#	300#	600#	900#	1500#	2500#	API 5000	API 10000
Up to 3in	SP	SP	SP	SP	SP	SP	SP	SD
4in to 6in	SP	SP	SP	SP	SP	SP	SP	SD
8in to 10in	SP	SP	SD	SD	SD	SD	SD	-
Above 12in	SD	SD	SD	SD	SD	SD	-	-

SP = spectacle blind SD = spade /spacer

PSL requirements:

- Materials with SMYS > 60 ksi (414 MPa) are considered high strength material.
- High strength Carbon steel fittings and flanges for class 900# to 2500# shall meet the requirements of API 6A, PSL-2.
- High strength Carbon steel, Stainless steel flanges for API 5000 and API 10000 shall meet the requirements of API 6A, PSL-3.
- High strength Carbon steel, Stainless steel fittings for API 5000 and API 10000 shall meet the requirements of API 6A, PSL-2.
- API 5L pipe e.g. X60 and X65 shall meet the requirements of API 5L, PSL-2.

3.1 Requirements for Pipes

Dimension and wall thickness for steel pipe shall conform to ASME B36.10M or B36.19M as applicable.

Dimension and wall thickness for 90/10 Copper Nickel Alloy pipe shall conform to EEMUA 144 as applicable.

All pipes shall be submitted to a mill hydrotest.

Hydro testing for pipes shall be as per latest editions of ASTM A530 or API 5L as applicable.

The pipe weld shall be 100% radiographed to meet the requirements of ASME B31.3 table 302.3.4

Pipe with screwed ends shall have NPT external taper pipe threads conforming to ASME B1.20.1.

Longitudinal weld of welded pipe shall have minimum weld joint quality factor (E) of 1 as defined by ASME B31.3

Seamless and Longitudinal SAW welded pipes shall not have any circumferential seam joint in a random length.

Weld repairs of parent pipe material is not permitted and shall not be allowed.

Pipe with beveled ends shall be in accordance with ASME B16.25

Mill tolerance for Carbon Steel & Stainless Steel shall not exceed the limits that specified in ASTM A530, API 5L.

Văn bản này được xác thực tại https://eoffice.vietsov.com.vn với số định danh: 627/25-CV-XDM/NIPI

Except for CU-NI pipe, metallic pipe shall be supplied in single or double random length of 6 and 12 meters respectively as specified in purchase requisition and tolerance of pipe length is limited to 5% of the total length of the delivery.

CU-NI, PPR, CVPC, GRE pipe length shall be less than 4 m with tolerance of pipe length is limited to 5% of the total length of the delivery.

For pipe as per ASTM Standard Specification, in case no straightness tolerances are specified, the ones defined by API SPEC 5L shall be applied.

All pipes shall be provided with a product analysis/ test certificates.

3.1.1 Carbon Steel Pipe:

All seamless carbon steel pipe for design temperatures above 0°C shall be supplied in the normalized condition excepting that hot finishing is acceptable provided certification is provided that hot forming was conducted in the range 777°C to 949°C followed by cooling in still air.

All welded carbon steel pipe for design temperatures above 0°C may be supplied in either as rolled or normalized condition, with a maximum cold expansion of 1.5%.

All carbon steel pipe for design temperature below 0°C shall be supplied normalized or in an alternative heat treated condition approved by the COMPANY.

Pipe shall be seamless is 16in and below, welded pipe is 18in and above.

Welded pipe in accordance with API 5L shall be submerged arc welded with at least one pass on both the inside and outside.

Impact testing on materials for pipes, heat-treated fittings, flanges and valves shall be carried out and certified. The basis shall be one fitting / one flange for each size / form / type in every heat (or in every heat treatment lot if this occurs more frequently). The Charpy V-notch impact testing shall be carried out in accordance with ASTM A370. The minimum acceptable Charpy toughness shall be an average, from three specimens, of 45J minimum average with 37J minimum individual for X60 and X65 materials. The indicated energy levels are the minimum requirements. If the material specification requires a higher value, the same shall be complied with. The impact test temperature/ wall thickness shall be meet the requirements of ASME B31.3 Para. 323.3

3.1.2 Stainless Steel Pipe:

All materials shall be in accordance with ASTM A312 dual-stamped to type 316/316L with a minimum Molybdenum content of 2.5%. All materials shall possess the weldability equivalent to that of type 316L with enhanced mechanical properties as that of type 316

Pipe shall be seamless is 16in and below, welded pipe is 18in and above.

All pipes shall be supplied in the solution heat treated condition, de-scaled, pickled, and passivated. Positive Material Identification (PMI) shall be carried out for all austenitic stainless steel pipes and fitting materials. Refer to section 4.0 of this document.

Văn bản này được xác thực tại https://eoffice.vietsov.com.vn với số định danh: 627/25-CV-XDM/NIPI

3.1.3 Cu-Ni Pipe:

Wall thickness shall be based on table 1.2.2 and table 2.2.2 for 20 bar rating of EEMUA 144. Manufacturer to verify and confirm wall thickness during Detail Engineering Design.

Pipe shall be seamless is 16in and below, welded pipe is 18in and above.

3.1.4 GRE Pipe:

All fabricated joints shall be Taper Bell / Taper Spigot (TB/TS)

Wall thickness shall be as per Manufacturer's standard for select design conditions.

Manufacturer to verify and confirm wall thickness, submit full details and obtain COMPANY / Purchaser approval in writing.

Pipe length shall be as per manufacturer's standard but not exceeding 6 meter per length.

It is a requirement that the GRE Vendor be selected at an early stage in the detailed design in order to provide the necessary input into project piping design. Unless specifically authorized by the COMPANY, all GRE piping on the project shall be supplied by one VENDOR and MANUFACTURER.

GRE Pipe Vendor's responsibilities shall, in general, include supply of materials, design, installation, inspection and testing. CONTRACTOR shall determine and develop, in conjunction with GRE Pipe Vendor, all necessary interfaces to ensure smooth implementation.

3.1.5 CPVC Pipe:

All fabricated joints shall be plain & socket end

Wall thickness shall be based on ASTM F441/ F441M-09 and Manufacturer's standard. Manufacturer to verify and confirm wall thickness, submit full details and obtain COMPANY / Purchaser approval in writing.

Pipe length shall be as per manufacturer's standard but not exceeding 6 meter per length.

3.1.6 PP-R Pipe:

All fabricated joints shall be plain & socket end

Dimension, wall thickness shall be based on DIN 8077/ DIN 8078/ DIN 16962 and Manufacturer's standard. Manufacturer to verify and confirm wall thickness, submit full details and obtain COMPANY / Purchaser approval in writing.

Pipe length shall be as per manufacturer's standard but not exceeding 6 meter per length.

3.2 Requirements for Fittings

All wrought fittings shall be seamless in construction up to 16" NPS and welded for 18" NPS and above unless otherwise specified. All welded fittings shall be welded construction with 100% radiography and joint factor of 1.0.

Wall thickness at the ends of butt welded fittings shall be equal to the thickness of connected pipe.

All carbon steel fittings shall be supplied in the normalized condition.

Văn bản này được xác thực tại https://eoffice.vietsov.com.vn với số định danh: 627/25-CV-XDM/NIPI

No repairs by welding to fittings are permitted.

Threaded joints shall conform to ASME B1.20.1.

Outside diameters and wall thickness of butt welded fittings shall be in accordance with ASME B36.10 and ASME B36.19 as applicable, unless noted otherwise.

For reducing butt welded fittings having different wall thicknesses at each end, the greater wall thickness of the fitting shall be employed and inside bore at each end shall be matched with the specified inside diameter.

For special fittings like weldolet, sockolet, sweepolet, swaged nipple etc, which are not covered in ASME standards, the relevant MSS SP standard shall be used together with manufacturer's standard. Contours of these fittings shall meet the requirements of latest edition of ASME B31.3. Manufacturer shall submit drawings / catalogues of these items along with the offer.

All welded fittings shall be double welded. Inside weld projection shall not exceed 1.6 mm. Welds shall be ground smooth at least 25 mm from the ends.

For fittings made out of welded pipe, the welded pipe shall be double welded type and manufactured with the addition of filler metal.

Welded tees shall not be of fabricated stub-in type.

All welded fittings shall be normalized and 100% radiographed by X-ray on all welds made by fitting manufacturer. Radiograph shall overlap the parent materials.

Unless otherwise specified in the requisition all socket weld and screwed fittings shall be in accordance with ASME B16.11 to the extent covered in the specification except for unions which shall be in accordance with MSS SP-83.

For special fittings like weldolet, sockolet, sweepolet, swaged nipple etc, which are not covered in ASME standards, the relevant MSS SP standard shall be used together with manufacturer's standard. Contours of these fittings shall meet the requirements of latest edition of ASME B31.3. Manufacturer shall submit drawings / catalogues of these items along with the offer.

All seamless / welded pipes employed for manufacturing of fittings shall have undergone hydrotest to latest editions of ASTM A530 or API 5L as relevant.

All stainless steel fittings shall be supplied in solution annealed heat treated condition.

All fittings made to ASTM A105 shall be supplied normalized.

All pipe fittings shall comply with the technical requirement for the purchase of pipe fittings.

3.3 Requirements for Flanges

Pressure/ temperature ratings of flanged components 1/2 in through 24 in are based on ASME B16.5 and ASME B31.3. Pressure/ temperature ratings of flanged components larger than 24 in are based on ASME B16.47 Series A.

Flange dimensions, surface and hole of bolts shall comply with ASME B16.5 for diameter 24 in and below; ASME B16.47 Series A for 26 in and above.

Following flange facing shall be followed:

Văn bản này được xác thực tại https://eoffice.vietsov.com.vn với số định danh: 627/25-CV-XDM/NIPI

- Flat face (FF) for GRE, CPVC, Copper Nickel Materials
- Raised face (RF) for class 150 to class 600 (with the exception for piping line where RTJ flanges are used for class 300, 600 flanges)
- Ring Joint (RTJ) for API flanges and ASME class 900 and above

Flange ratings, facing, face finish, overall dimensions and manufacture shall be as per ASME B16.5 unless otherwise noted on the material specification sheets. Class 400 flanges shall not be used unless required to match nozzles of compressors, pumps, turbines, etc of standard design supplied by equipment manufacturers.

Ends of weld neck flanges shall be beveled to suit the schedule/ thickness of matching pipe as specified in the requisition. Bore of socket welded flanges shall be suited to outside diameter and thickness of matching pipe. End of screwed flanges, unless otherwise specified, shall have taper threads as per ASME B1.20.1.

For ring joint flanges, spectacle blinds, spacers and blinds the hardness of groove shall be 140 BHN for carbon steel and 160 BHN for SS316.

For flanges in diameters and series are not within the scope of ASME B16.5 and ASME B16.47 Series A, the Manufacture shall submit for approval by the Company a detailed dimensional drawing of the flange and its sealing gasket and the supporting calculation dossier. The flange and the flanged assembly shall be designed per rules of ASME BPVC Section VIII Div 1 - Mandatory Appendix 2 considering the allowable stress as given in ASME BPVC Section II Part D or ASME BPVC Section VIII Div 2 Clause 4.16 considering the allowable stress as given in ASME B31.3 Appendix A Table A1 or A1M. Manufacturer shall supply all necessary information in compliance with ASME B16.5 / ASME B16.47, with at least but not exclusively:

- OD flange
- Flange thickness
- Length through the hub
- OD of weld neck and of hub
- Number of bolts
- Diameter of bolt circle
- Bolt hole diameter
- Bolt diameter
- Dimensions and geometry of ring joint facings
- Dimensions of raised facings
- Gasket type (geometry and material)
- Diameter, dimensions and angles of the RJ ring and of its groove, all checked in eight cross section at least, equally spaced around the clock
- The RJ ring shall always be of solid material

Văn bản này được xác thực tại https://eoffice.vietsov.com.vn với số định danh: 627/25-CV-XDM/NIPI

- The RJ ring type, the reference of the RJ ring type shall be hard stamped and remain legible on the flange after painting
- The as-built dimensional drawings shall be approved by the purchaser
- The dimensional survey protocol shall report the dimensional and angular tolerances for all applicable measurements

All carbon steel flanges shall be normalized (e.g. ASTM A105N).

All high strength carbon steel flanges and fittings may be supplied with the heat treatment condition in accordance with ASTM code and MSS SP 75.

The flanges for spectacle blind assemblies shall be provided with jackscrews (to jack screws, 180 degree) in one of each pair of flanes in order to facilitate blind swinging / installation.

Jack screw or equal shall be provided for all ring type joint flange above 6" for ease of piping or equipment removal (required on side only).

The dimensions of orifice flanges shall comply with ASME B16.36. Orifice flanges shall be supplied with flange taps and jackscrews and shall have NPS 1/2" tapings in accordance with ASME B16.36

Wherever the flange raised face finish is not mentioned, it shall be serrated spiral or concentric with average roughness of 3.2 to 6.3 µm or 125 to 250 µin. Gasket side wall contact surface for ring type joints shall not exceed roughness of 1.6 µm or 63 µin.

Spectacle blinds, spacers and blinds shall, in general, comply with ASME B16.48.They shall be fabricated without raised face and for RTJ shall be of female type. Their thickness is rounded up to commercially available plate thickness and shown in material take-off. For sizes that are not within the scope of ASME B16.48, Vendor shall propose a standard and with justifiable design calculation in compliance with ASME B31.3 which shall be subject to Company approval.

Corrosion allowance will be taken equal or larger than that of the piping class and only be applied once (i.e. it will not be applied to both sides of the spectacle blind)

Plate material for fabrication of spectacle blinds, spacers and blinds shall be as follow:

- Carbon steel and low temperature carbon steel piping: ASTM A516 GR.70; impact tested at -50 °c if used in low temperature piping classes.
- Austenitic stainless steel 316L piping: ASTM A240 GR.316/316L
- Non-metallic piping: ASTM B171 C70600.

3.4 Requirements for Bolting

Bolting shall conform to ASME B1.1, ASME B18.2.1 and the relevant ASTM standards. Nuts shall conform to ASME B18.2.2

Bolts shall be fully threaded alloy steel stud bolts with two heavy hexagonal nuts as per the relevant material standard. All carbon steel stud bolts and nuts shall be SermaGard coated and comply with ASTM F1428.

Văn bản này được xác thực tại https://eoffice.vietsov.com.vn với số định danh: 627/25-CV-XDM/NIPI

Specified bolt length excludes the bolt point ends.

Bolt Length shall be determined and included in the requisition. All bolt/ nuts shall comply with the technical requirement for the purchase of bolting.

Bolts with diameter equal or larger than 1 ¼" are specified on diameter longer than standard length to accommodate bolt tensioning equipment.

Hydraulic bolt tensioners shall be used for stud bolts size 2" and above. When it is demonstrated impracticable to use bolt tensioning, hydraulic torque equipment may be used. Torque value shall be documented and shall be provided to Company.

When hydraulic tensioning equipment is used, bolt lengths shall be increased at least by one bolt size minimum as to show the necessary thread length free for equipment gripping.

Bolts and nuts shall be SermaGard coated. For ease of identification, the coated bolting to be colour coded as follows:

- ASTM A193-B7/ A194-2H – Black
- ASTM A320-L7/ A194-4L – Blue
- ASTM A193-B8M/ A194-8M – White

3.5 Requirements for Gaskets

Spiral wound gaskets shall be 4.5 mm thick (0.175") with 3 mm thick (0.125") inner ring in SS316 and outer rings in SS with non asbestos filler.

Ring join gasket shall be used Octagonal RTJ and comply with ASME B16.20. Soft iron RTJ ring shall be hardness of 90 BHN. Stainless Steel RTJ ring shall be SS316 with hardness of 160 BHN. Soft iron RTJ shall be protected with electroplated zinc to a maximum thickness of 8µm.

Flat Ring, Full Face gasket shall be comply with ASME B16.21.

3.6 Valves

All valves shall comply with the requirements of VSP-NIPI-TYP-TS-PI1-SP-02.

4. MATERIALS

4.1 General Material Requirements

All materials shall conform to relevant ASME, ASTM, API and BS standards. Design and fabrication shall conform to ASME B31.3 "Process Piping" and API RP 14E "Recommended Practice for Design and Installation of Offshore Production Platform Piping Systems". Only latest editions of standards mentioned herein shall be referred to.

Material specification/class sheets which are part of this document show piping material to be used. Each class shall only be used within indicated pressure / temperature range in accordance with ASME B16.5

Bar stock material shall not be used for the fabrication of pipe fittings or valves, including modular valves.

All forgings and castings shall be normalized or quenched and tempered condition

Văn bản này được xác thực tại https://eoffice.vietsov.com.vn với số định danh: 627/25-CV-XDM/NIPI

All piping material, such as pipe, flanges, fittings, and their dimensions, tolerances, chemical composition, physical properties, heat treatment, hydrostatic test, pneumatic test, Visual examinations and other testing and markings shall conform to the codes and standards specified in this document. Deviations, if any, shall be clearly highlighted in the bid.

Test reports shall be supplied for all mandatory tests as per the applicable material specifications. Test reports shall also be furnished for any supplementary tests as specified.

Material test certificates, including physical properties, chemical composition, heat treatment and impact test report, shall also be furnished for the piping materials supplied.

Supplier shall furnish manufacturer's certificate / work's certificate which shall contain the following data as a minimum:

- Filled in data sheets / equipment specification,
- Limitations with respect to operating, pressure / temperature,
- Statement from the manufacturer to confirm that the equipment/ item has been constructed and manufactured according to recognized method, codes and standards.
- Requirements for Post Weld Heat Treatment shall be in accordance with ASME B31.3
- All carbon steel weld joints having a pipe thickness of 19.05mm above shall be post weld heat treated in accordance with ASME B31.3

Galvanized piping materials shall be coated with zinc by hot dip process conforming to ASTM A153 or by electro-galvanizing as per ASTM B633 with a minimum of 25 micrometers thickness. Threaded portion shall be suitably protected during galvanizing.

No ductile, or malleable iron, aluminium, plastic or copper bearing alloy shall be used in hydrocarbon service.

All material shall be new, clean, and free from rust, pits and obvious defects.

Packing materials containing asbestos shall not be used.

Bar stock material shall not be used for the fabrication of pipe fittings or valves, including modular valves.

All materials shall be new and identifiable against their certification.

4.2 Carbon Steel

The Carbon Equivalent for carbon steel intended for welding shall not exceed 0.43% based on the long formula.

$$CE = C + \frac{Mn}{6} + \frac{Cr + Mo + V}{5} + \frac{Cu + Ni}{15}$$

The maximum carbon content for carbon steel plate and pipe materials shall be 0.23% by ladle analysis. The carbon content of forgings shall not exceed 0.25%.

The used of rimming steel is not permitted.

Văn bản này được xác thực tại https://eoffice.vietsov.com.vn với số định danh: 627/25-CV-XDM/NIPI

4.3 Austenitic Stainless Steel

The used of austenitic stainless steel is limited to a maximum temperature of 60°C due to Chloride Stress Corrosion Cracking tendency. External painting is required if temperature exceeds the maximum requirements.

All austenitic stainless steel shall be grade 316/316L.

All austenitic stainless steel shall be supplied in a solution annealed condition. No welding or working of the material is permitted after this treatment.

All welds made to stainless steel components shall be pickled and passivated. Radiography or alternative NDT shall be conducted to ensure a joint factor of 1.0.

All threaded joints shall be treated with a suitable anti-galling compound.

Any hydrostatic testing of austenitic stainless steel shall be conducted with Chloride content in water use for pressure test should be maximum 30 ppm, and any open ends sealed after drying to ensure no moisture ingress.

Positive Material Identification (PMI) shall be required for Alloy /Stainless Steel material

4.4 Cu-Ni

Cu-Ni material shall be a nominal 90/10 Cu-Ni-Fe composition complying with UNS C70600 and ASTM B466 with the following limitations: Percentage of carbon shall be 0.05% (max), Zn- 0.5% (max) and Pb-0.02% (max).

Pipe shall be supplied in the annealed condition. Dimensions shall be in accordance with EEMUA publication No 144. The nominal EEMUA rating for wall thickness sizing shall be "20 bar" as a minimum. 100% internal visual inspection shall be performed to confirm the absence of manufacturing defects.

4.5 GRE

GRE piping component design shall be based on the manufacturing process of filament winding using epoxy resins to impregnate strands of continuous glass filaments which are wound around a mandrel at a prescribed helix angle and under controlled tension. Fiber reinforcement shall be E-glass but other reinforcements such as C, R, S and ECR may be used to enhance product performance. Unless agreed otherwise, adhesives for bonded connections shall be of a conductive epoxy type and shall be heat resistant and suitable for the specified service.

Design, Supply, Fabrication and Testing of GRE piping system shall comply with the requirements of UKOOA / API 15LR.

GRE piping system shall be properly designed to eliminate the static electricity as required. Care shall be taken to prevent piping from any surface degradation due to Ultra Violet radiation exposure. GRE piping is susceptible to impact damage and the need for the shielding shall be reviewed and provided as required.

GRE piping for wet fire water system shall meet the requirements of IMO resolution A753 (18) for level 3.

Văn bản này được xác thực tại https://eoffice.vietsov.com.vn với số định danh: 627/25-CV-XDM/NIPI

The Vendor shall provide all components, complete with all materials and equipment, required for the complete system including:

- Pipes
- Fittings and flanges; all flanges shall be filament wound.
- Bolting, gaskets and the necessary backing rings for GRE piping connections.
- Pipe supports, including all guides, anchors, trunnions, saddles etc. in direct contact with the GRE pipe.
- Adhesive, consumables and joint preparation materials for installation onshore and for any site hook up.
- All pipe, flanges and fittings shall comply with the specified pressure rating as per piping specifications.

4.6 CPVC and PP-R

CPVC pipes shall meet the requirements of ASTM D1784 and the fittings shall be as per ASTM F438. CPVC is normally solvent cemented. Since CPVC piping system is susceptible to mechanical impact, the requirement of shielding of the piping system shall be reviewed and provided as required.

PP-R pipes, fittings and general quality requirements & testing shall meet the requirements of DIN 8078/ DIN 16962. The material and wall thickness of PP-R piping system is selected for 25 years service life.

5. MARKING AND IDENTIFICATION

Marking shall be as per relevant ASME, ASTM, MSS or other standards as mentioned on the purchase description.

Unless otherwise specified, the location, style, symbols and other requirements for maring shall be in accordance with MSS-SP25

Cold hard stamping is not permitted on Carbon steel material. Stamping shall be by using low stress stamping or vibro etching only.

Galvanised components shall not be electro-etched. Stainless steel components shall not be electro-etched prior to solution annealing.

6. INSPECTION, TESTING AND CERTIFICATION

VENDOR shall be responsible for all the inspection and testing that required Third Party witness and review.

All piping components shall be tested in accordance with their applicable ASTM, ASME/ANSI, MSS, BS, EEMUA or other referenced Code or Standard.

Where impact testing is specified in the enquiry and purchase order document, or by the applicable ASMT Standard, it shall be Charpy V-notch tested in accordance with ASTM A370

Văn bản này được xác thực tại https://eoffice.vietsov.com.vn với số định danh: 627/25-CV-XDM/NIPI

The test fluid used for hydrostatic testing shall be water. The chloride ppm in water shall be not more than 30ppm for hydrotesting.

Following testing, all components are to be thoroughly dried prior to preparation for packing and shipping.

All gaskets surfaces are to be thoroughly cleaned prior to preparation for packing and shipping.

All flange faces, hub connector faces, bevels of pipe and fittings are to be suitably protected to avoid damage during shipping.

Unless noted otherwise all pipe, fittings, flanges, bolting, gaskets shall be with material test certificates as per DIN 50049 3.1 / EN10204 3.1

Material certificates in accordance with DIN 50049 3.1 / EN10204 3.1 shall be submitted which shall contain, as a minium, the following information:

- Chemical analysis. All chemical elements for which a specification limit is set shall be reported; The carbon equivalent (CE) shall be calculated (as per para. 5) and included in the certificate.
- Mechanical properties, with results of the following mechanical tests where a specification limit is set:
  - Tensile Test (both ultimate and yield)
  - Elongation test;
  - Bend test;
  - Impact Test;
  - Hardness test.
- A statement of the heat treatment applied. Where heat treatment invoke supplementary NDE or mechanical tests, these are mandatory and shall be included in certification.
- Non-destructive test results;
- Hydrostatic and/ or pneumatic test results

Certificates shall be referenced to the following:

- Mill and/ or manufacturer's name and location;
- The purchase order and purchase order item numbers;
- Heat or cast number;
- Description of the piping component covered by the certificates, including the nominal pipe size and/ or pressure rating;
- Material type, specification and grade (e.g. carbon steel ASTM A216 Gr. WCB)

Mill test certificates according to DIN 50049 / EN10204

- For all non metallic components
- For galvanised pipes, fittings and flanges.

Văn bản này được xác thực tại https://eoffice.vietsov.com.vn với số định danh: 627/25-CV-XDM/NIPI

- A statement confirming that the material is in accordance with that which is specified.
- A statement confirming that hydrostatic testing (if required) is in accordance with that which is specified.

7. PIPING CLASS IDENTIFICATION

A C 1

Sequence Number

Material Coding

B	90/10 Copper Nickel
C	Carbon Steel (Including Galvanised & Low Temp & CS High Strength, accordance with ASME B31.3)
S	Stainless Steel
P	Plastic (Including CPVC, PP-R)
X	Carbon Steel High Strength (accordance with ASME B31.4 & ASME B31.8)

Rating Code

A -	150#
B -	300#
C -	600#
D -	900#
E -	1500#
F -	2500#
G -	API 5000
H -	API 10000
3 -	3000 Psi
6 -	6000 Psi

Văn bản này được xác thực tại https://eoffice.vietsov.com.vn với số định danh: 627/25-CV-XDM/NIPI

8. PIPING MATERIAL SPECIFICATION/ CLASS INDEX

Văn bản này được xác thực tại https://eoffice.vietsov.com.vn với số định danh: 627/25-CV-XDM/NIPI

PIPING MATERIAL SPECIFICATION/ CLASS INDEX

No	Piping Class	ASME/ API Rating	Material	Corrosion Allowance (mm)	Service	Abbreviations	Service Design Conditions		Class Design Limit		Max. Design NPS (in)	Remark
							Press. (barg)	Temp. (°C)	Press. (bar)	Temp. (°C)		
1	AC1	150#	CARBON STEEL	3	Process Mixed Flow	P	7	0 / 150	19.6 19.2 17.7 15.8 13.8	-29 to 38 50 100 150 200	24	
					Crude Oil	CO	12	-29 / 120				
					Process/ Produced / Treated water	PW	10	0 / 80				
					Open Haz. Drain	DH	13	-20 / 155				
					Open Non Haz. Drain	DN	13	-20 / 155				
					Closed Drain	DC	7	0 / 80				
					LP Vent	VL	13	-20 / 155				
					HP Vent	VH	13	-20 / 155				
					Nitrogen	NT	13	-20 / 155				
					Produced Gas	PG	13	-20 / 155				
					Fuel Gas	FG	13	0 / 155				
					Fuel Oil / Diesel Oil	FO	7	0 / 150				
					Lube Oil	OL	13	0 / 65				
					Methanol	MT	13	-29 / 38				
					Glycol	GY	7	0 / 150				
					Oily water	OW	13	0 / 100				
					Injection Water	WI	13	0 / 40				
2	AC2	150#	CARBON STEEL	3	Steam	ST	13	210	19.6 19.2 17.7 15.8 13.8 12.1	-29 to 38 50 100 150 200 250	24	

Văn bản này được xác thực tại https://eoffice.vietsov.com.vn với số định danh: 627/25-CV-XDM/NIPI

No	Piping Class	ASME/ API Rating	Material	Corrosion Allowance (mm)	Service	Abbreviations	Service Design Conditions		Class Design Limit		Max. Design NPS (in)	Remark
							Press. (barg)	Temp. (°C)	Press. (bar)	Temp. (°C)		
3	AC3	150#	CARBON STEEL	3	Vent Exhaust	VE	2	0 / 425	19.6 19.2 17.7 15.8 13.8 12.1 10.2 8.4 6.5 5.5	-29 to 38 50 100 150 200 250 300 350 400 425	24	
4	AC4	150#	CARBON STEEL	5	Open Haz. Drain	DH	13	-20 / 155	19.6 19.2 17.7 15.8 13.8	-29 to 38 50 100 150 200	24	
					Open Non Haz. Drain	DN	13	-20 / 155				
					LP Vent	VL	13	-20 / 155				
					HP Vent	VH	13	-20 / 155				
					Closed Drain	DC	7	0 / 80				
5	AC5	150#	CARBON STEEL GALV.	1.6	Wash/ Fresh Water	WW	12	0 / 65	19.6 19.2 17.7 15.8 13.8	-29 to 38 50 100 150 200	16	
					Grey Water/ Sewage Water	WG	12	0 / 80				
					Instrument Air	AI	13	0 / 65				
					Utility Air	AU	13	0 / 65				
6	AC6	150#	CARBON STEEL LOW TEMP.	3	Blowdown gas	BD	13	-46 / 100	19.6 19.2 17.7 15.8 13.8	-29 to 38 50 100 150 200	24	
					HP Flare	BH	13	-46 / 155				
					LP Flare	BL	13	-46 / 155				

Văn bản này được xác thực tại https://eoffice.vietsov.com.vn với số định danh: 627/25-CV-XDM/NIPI

No	Piping Class	ASME/ API Rating	Material	Corrosion Allowance (mm)	Service	Abbreviations	Service Design Conditions		Class Design Limit		Max. Design NPS (in)	Remark
							Press. (barg)	Temp. (°C)	Press. (bar)	Temp. (°C)		
7	AS1	150#	STAINLESS STEEL	0	Instrument Air	AI	13	0 / 65	19 18.4 16.2 14.8 13.7 12.1	-29 to 38 50 100 150 200 250	16	
					Utility Air	AU	13	0 / 65				
					Chemical Injection	CH	12	0 / 45				
					HP Flare	BH	13	-20 / 155				
					LP Flare	BL	13	-20 / 155				
					Lube Oil	OL	13	0 / 65				
					Fuel gas	FG	13	-20 / 155				
					Biocide	BI	10	0 / 100				
					O2 Scavenger	OR	10	0 / 100				
					Aviation Fuel	FA	13	0 / 65				
					Corrosion Inhibitor	CI	12	0 / 45				
8	AB1	150#	90/10 Cu-Ni	0	Fire Water	FW	13	16 / 65	16 16 16 15.7	38 50 75 100	12	
					Sea Water	WS	13	16 / 65				
					Cooling water	WC	13	0 / 40				
9	AG1	150#	GRE	0	Open Drain Hazardous	DH	13	0 / 100	20 20 20 20 20 10	-10 38 50 85 93 121	24	(Note 1)
					Open Drain Non Hazardous	DN						
					Wash Water	WW						
					Grey Water / Sewage Water	WG						
					Process/ Produced / Treated water	PW						
					Sea Water	WS						
					Oily water	OW						

Văn bản này được xác thực tại https://eoffice.vietsov.com.vn với số định danh: 627/25-CV-XDM/NIPI

No	Piping Class	ASME/ API Rating	Material	Corrosion Allowance (mm)	Service	Abbreviations	Service Design Conditions		Class Design Limit		Max. Design NPS (in)	Remark
							Press. (barg)	Temp. (°C)	Press. (bar)	Temp. (°C)		
10	AP1	-	PP-R	0	Wash Water	WW	12	0 / 65	37.3 31.8 26.8 22.6 19.1 15.9 12.1	10 20 30 40 50 60 70	12	25 years of service life
					Potable Water	WP						
11	AP2	-	CPVC	0	Wash Water	WW	12	0 / 65	12	0 / 65	12	
					Potable Water	WP						
12	BC1	300#	CARBON STEEL	3	Crude Oil	CO	45	-29 / 120	51.1 50.1 46.6 45.1 43.8 41.9	-29 to 38 50 100 150 200 250	30	
					Process Mixed Flow	P						
					Process Gas	PG						
					Process Liquid	PL						
					Closed Drain	DC						
					Condensate Water	CW						
					Steam	ST	35	0 / 120				
					Oily water	OW	20	0 / 100				
					Injection Water	WI	35	0 / 40				
13	BC2	300#	CARBON STEEL GALV.	1.6	FM-200	FM	35	-29 / 45	51.1 50.1 46.6	-29 to 38 50 100	16	
14	BS1	300#	STAINLESS STEEL	0	Fuel gas	FG	35	-29 / 100	49.6 48.1 42.2 38.5 35.7	-29 to 38 50 100 150 200	16	
					Seal Gas	SG	35	0 / 100				
					Corrosion Inhibitor	CI	35	-29 / 100				
					Demulsifier	DM	35	-29 / 100				
					Pour Point Depressant	PD	35	-29 / 100				

Văn bản này được xác thực tại https://eoffice.vietsov.com.vn với số định danh: 627/25-CV-XDM/NIPI

No	Piping Class	ASME/ API Rating	Material	Corrosion Allowance (mm)	Service	Abbreviations	Service Design Conditions		Class Design Limit		Max. Design NPS (in)	Remark
							Press. (barg)	Temp. (°C)	Press. (bar)	Temp. (°C)		
15	BG1	300#	GRE	0	Open Drain Hazardous	DH	25	0 / 100	25 25 25 25 25 12	-10 38 50 85 93 121	24	(Note 1)
					Open Drain Non Hazardous	DN						
					Process/ Produced / Treated water	PW						
					Oily water	OW						
16	BX1	300#	CARBON STEEL HIGH STRENGTH	3	Process Mixed Flow	P	45	-29 / 120	51.1 50.1 46.6 45.1	-29 to 38 50 100 150	24	ASME B31.4
					Process Gas	PG						
					Process Liquid	PL						
17	CC1	600#	CARBON STEEL	3	Process Mixed Flow	P	85	-20 / 190	102.1 100.2 93.2 90.2 87.6 83.9	-29 to 38 50 100 150 200 250	30	
					Process Gas	PG						
					Process Liquid	PL						
					Fuel gas	FG						
					HP Flare	BH						
					HP Vent	VH						
					Crude Oil	CO	60	-20 / 100				
					Flushing Oil	PL						
					Injection Water	WI						
					Closed Drain	DC						

Văn bản này được xác thực tại https://eoffice.vietsov.com.vn với số định danh: 627/25-CV-XDM/NIPI

No	Piping Class	ASME/ API Rating	Material	Corrosion Allowance (mm)	Service	Abbreviations	Service Design Conditions		Class Design Limit		Max. Design NPS (in)	Remark
							Press. (barg)	Temp. (°C)	Press. (bar)	Temp. (°C)		
18	CX1	600#	CARBON STEEL HIGH STRENGTH	3	Process Mixed Flow	P	85	-20 / 190	102.1 100.2 93.2 90.2 87.6	-29 to 38 50 100 150 200	24	ASME B31.4
					Process Gas	PG	85	-20 / 190				
					Process Liquid	PL	85	-20 / 190				
19	DC1	900#	CARBON STEEL	3	Gaslift	GL	130	0 / 45	153.2 150.4 139.8 135.2 131.4 125.8	-29 to 38 50 100 150 200 250	24	
					Process Mixed Flow	P		0 / 190				
					Process Gas	PG		0 / 190				
					Process Liquid	PL		0 / 100				
					Fuel gas	FG		0 / 100				
					Crude Oil	CO		0 / 100				
					Seal Gas	SG		0 / 100				
20	DC2	900#	CARBON STEEL	3	Steam	ST	100	0 / 300			16	
21	DC6	900#	CARBON STEEL LOW TEMP.	3	Gaslift	GL	130	-46 / 190	153.2 150.4 139.8 135.2 131.4 125.8	-29 to 38 50 100 150 200 250	24	
					Process Gas	PG						
					Process Liquid	PL						
					Relief gas	RL						
22	DS1	900#	STAINLESS STEEL	0	Blowdown Gas	BD	130	-46 / 45	148.9 144.3 126.6 115.5 107.0	-29 to 38 50 100 150 200	16	

Văn bản này được xác thực tại https://eoffice.vietsov.com.vn với số định danh: 627/25-CV-XDM/NIPI

No	Piping Class	ASME/ API Rating	Material	Corrosion Allowance (mm)	Service	Abbreviations	Service Design Conditions		Class Design Limit		Max. Design NPS (in)	Remark
							Press. (barg)	Temp. (°C)	Press. (bar)	Temp. (°C)		
23	DX1	900#	CARBON STEEL HIGH STRENGTH	3	Gaslift	GL	130	0 / 100	153.2 150.4 139.8 135.2 131.4	-29 to 38 50 100 150 200	16	ASME B31.8
24	EC1	1500#	CARBON STEEL	3	Gaslift	GL	220	0 /150	255.3 250.6 233.0 225.4 219.0 209.7	-29 to 38 50 100 150 200 250	16	
					Process Mixed Flow	P						
					Process Liquid	PL						
					Crude Oil	CO						
25	EX1	1500#	CARBON STEEL HIGH STRENGTH	3	Process Mixed Flow	P	220	0 /150	255.3 250.6 233.0 225.4 219.0 209.7	-29 to 38 50 100 150 200 250	16	ASME B31.4
					Process Liquid	PL						
					Process Gas	PG						
26	FC1	2500#	CARBON STEEL HIGH STRENGTH	3	Injection Water	WI	275	0 / 45	425.5 417.7 388.3	-29 to 38 50 100	10	
27	FC2	2500#	CARBON STEEL HIGH STRENGTH	3	Injection Water (form Drilling Jack-up)	WI	350	0 / 45	425.5 417.7 388.3	-29 to 38 50 100	8	

Văn bản này được xác thực tại https://eoffice.vietsov.com.vn với số định danh: 627/25-CV-XDM/NIPI

No	Piping Class	ASME/ API Rating	Material	Corrosion Allowance (mm)	Service	Abbrevia-tions	Service Design Conditions		Class Design Limit		Max. Design NPS (in)	Remark
							Press. (barg)	Temp. (°C)	Press. (bar)	Temp. (°C)		
28	FC3	2500#	CARBON STEEL	3	Injection Water	WI	275	0 / 45	425.5 417.7 388.3	-29 to 38 50 100	8	
29	FS1	2500#	STAINLESS STEEL	0	Chemical Injection (High Pressure)	CH	250	20 / 40	413.7 400.9 351.6	-29 to 38 50 100	1.1/2	
30	GC1	API 5000	CARBON STEEL HIGH STRENGTH	3	Process Mixed Flow	P	275	-29 / 100	344 338 332 326	-29 to 38 65 93 121	8	
					Methanol	MT	275					
					Corrosion Inhibitor	CI	275					
					Closed Drain	DC	275					
31	HC1	API 10000	CARBON STEEL HIGH STRENGTH	3	Process Mixed Flow	P	440	-29 / 100	689 677 652 639	-29 to 38 65 93 121	4	
					Methanol	MT	440					
					Wax Inhibitor	CP	440					
					Closed Drain	DC	440					

NOTE:

1. Maximum allowable design pressure - temperature shall be confirmed by manufacturer.

Văn bản này được xác thực tại https://eoffice.vietsov.com.vn với số định danh: 627/25-CV-XDM/NIPI

9. VALVE NUMBER CODING SYSTEM

Valve Type	BA	Ball Valve
	BU	Butterfly valve
	CH	Check Valve
	GA	Gate Valve
	GL	Globe Valve
	PL	Plug Valve
	NV	Needle Valve
	SB	Single Block (and Bleed)
	DB	Double Block (and Bleed)
	MV	Monoflange Valve
Pressure Class	A	150 ASME
	B	300 ASME
	C	600 ASME
	D	900 ASME
	E	1500 ASME
	F	2500 ASME
	G	API 5000
	H	API 10000
	3	3000 Psig
	6	6000 Psig
End Type	1	Threaded
	2	Socket weld (SW)
	3	FF Flange
	4	RF Flange
	5	RTJ Flange
	6	SW x Screw
	7	Brazed
	8	Butt Weld
	9	Flange x ½" FNPT
	10	Female c/w Male Nut (for tube)
	11	Socket End (SE)
Valve Identifier	A	FB – Floating, CS
Ball Valve	B	FB – Trunnion mounted, CS
	C	RB – Floating, CS
	D	RB – Trunnion mounted, CS
	E	FB – Floating, CS (Galv.)
	F	FB – Trunnion mounted, CS (Galv.)
	G	RB – Floating, CS (Galv.)
	H	RB – Trunnion mounted, CS (Galv.)
	I	FB – Floating, LTCS
	J	FB – Trunnion mounted, LTCS

Văn bản này được xác thực tại https://eoffice.vietsov.com.vn với số định danh: 627/25-CV-XDM/NIPI

	K	RB – Floating, LTCS
	L	RB – Trunnion mounted, LTCS
	M	FB – Floating, SS
	N	FB – Trunnion mounted, SS
	O	RB – Floating, SS
	P	RB – Trunnion mounted, SS
	Q	FB – Floating, Bronze
	R	FB – Trunnion mounted, Bronze
	S	RB – Floating, Bronze
	T	RB – Trunnion mounted, Bronze
	U	FB – Trunnion mounted, CS High Strength
	V	RB – Trunnion mounted, CS High Strength
	W	FB – Floating, PPR
	X	RB – Floating, PPR
	Y	FB – Floating, CPVC
	Z	RB – Floating, CPVC
	1	FB – Floating, CS High Strength
	2	RB – Floating, CS High Strength
Check Valve	A	Piston Type – CS
	B	Swing Type – CS
	C	Wafer Type, Dual Plate – CS
	D	Piston Type – CS (Galv.)
	E	Swing Type – CS (Galv.)
	F	Wafer Type, Dual Plate – CS (Galv.)
	G	Piston Type – LTCS
	H	Swing Type – LTCS
	I	Wafer Type, Dual Plate – LTCS
	J	Piston Type – SS
	K	Swing Type – SS
	L	Wafer Type, Dual Plate – SS
	M	Piston Type – Bronze
	N	Swing Type – Bronze
	O	Wafer Type, Dual Plate – Bronze
	P	Piston Type – CS High Strength
	Q	Swing Type– CS High Strength
	R	Wafer Type, Dual Plate – CS High Strength
	S	Swing Type – PPR
	T	Swing Type – CPVC
Butterfly Valve	A	Full Lug Type – CS
	B	Full Lug Type – CS (Galv.)
	C	Full Lug Type – LTCS
	D	Full Lug Type – SS
	E	Full Lug Type – Bronze
	F	Full Lug Type – PPR
	G	Full Lug Type – CPVC
	H	Flanged Type – CS

Văn bản này được xác thực tại https://eoffice.vietsov.com.vn với số định danh: 627/25-CV-XDM/NIPI

	I	Flanged Type – (Galv.)
	J	Flanged Type – Bronze
Gate Valve	A	Solid Wedge – CS
	B	Solid Wedge – CS (Galv.)
	C	Solid Wedge – LTCS
	D	Solid Wedge – SS
	E	Solid Wedge – Bronze
	F	Solid Wedge – CS High Strength
	G	Flex. Wedge – CS
	H	Flex. Wedge – CS (Galv.)
	I	Flex. Wedge – LTCS
	J	Flex. Wedge – SS
	K	Flex. Wedge – Bronze
	L	Flex. Wedge – CS High Strength
	M	Solid Wedge – PPR
	N	Solid Wedge – CPVC
Globe Valve	A	Inline – CS
	B	Inline – CS (Galv.)
	C	Inline – LTCS
	D	Inline – SS
	E	Inline – Bronze
	F	Inline – CS High Strength
	G	Inline – PPR
	H	Inline – CPVC
Plug Valve	A	Short Pattern – CS
	B	Venturi Pattern – CS
	C	Regular Pattern – CS
	D	Short Pattern – CS (Galv.)
	E	Venturi Pattern – CS (Galv.)
	F	Regular Pattern – CS (Galv.)
	G	Short Pattern – LTCS
	H	Venturi Pattern – LTCS
	I	Regular Pattern – LTCS
	J	Short Pattern – SS
	K	Venturi Pattern – SS
	L	Regular Pattern – SS
	M	Short Pattern – CS High Strength
	N	Venturi Pattern – CS High Strength
	O	Regular Pattern – CS High Strength
	P	Short Pattern – Bronze
	Q	Venturi Pattern – Bronze
	R	Regular Pattern – Bronze
Needle Valve	A	Inside Screw – CS
	B	Inside Screw – (Galv.)
	C	Inside Screw – LTCS
	D	Inside Screw – SS

Văn bản này được xác thực tại https://eoffice.vietsov.com.vn với số định danh: 627/25-CV-XDM/NIPI

	E	Inside Screw – CS High Strength
	F	Inside Screw – Bronze
Single Block & Bleed	A	FB – CS
	B	FB – CS (Galv.)
	C	FB – LTCS
	D	FB – SS
	E	FB – Bronze
Double Block & Bleed	A	FB – CS
	B	FB – CS (Galv.)
	C	FB – LTCS
	D	FB – SS
	E	FB – CS High Strength
Monoflange Valve	A	Single Block & Bleed Valve - CS
	B	Single Block & Bleed Valve – CS (Galv.)
	C	Single Block & Bleed Valve – LTCS
	D	Single Block & Bleed Valve – SS
	E	Double Block & Bleed Valve – CS
	F	Double Block & Bleed Valve – CS (Galv.)
	G	Double Block & Bleed Valve – LTCS
	H	Double Block & Bleed Valve – SS
	I	Double Block & Bleed Valve – CS High Strength
Valve Operator	G	Gear box
	H	Hand wheel
	L	Lever
	N	None (for check valve)
	T	T-bar

Example:

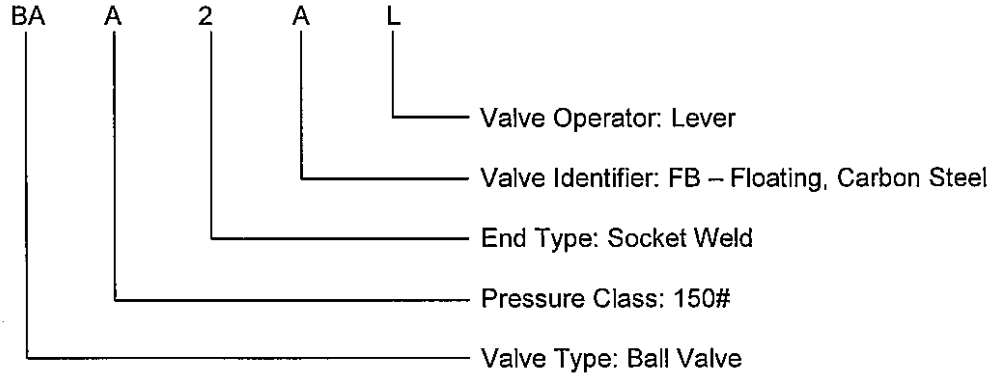

Văn bản này được xác thực tại https://eoffice.vietsov.com.vn với số định danh: 627/25-CV-XDM/NIPI

10. LIST OF APPENDICES

No.	Appendix No.	Appendix Title	Number of Pages	Page No.
1	Appendix 01	Piping Material Class Specification: AC1 – 150#	4	39
2	Appendix 02	Piping Material Class Specification: AC2 – 150#	4	43
3	Appendix 03	Piping Material Class Specification: AC3 – 150#	4	47
4	Appendix 04	Piping Material Class Specification: AC4 – 150#	4	51
5	Appendix 05	Piping Material Class Specification: AC5 – 150#	4	55
6	Appendix 06	Piping Material Class Specification: AC6 – 150#	4	59
7	Appendix 07	Piping Material Class Specification: AS1 – 150#	4	63
8	Appendix 08	Piping Material Class Specification: AB1 – 150#	4	67
9	Appendix 09	Piping Material Class Specification: AG1 – 150#	5	71
10	Appendix 10	Piping Material Class Specification: AP1 – 150#	4	76
11	Appendix 11	Piping Material Class Specification: AP2 – 150#	4	80
12	Appendix 12	Piping Material Class Specification: BC1 – 300#	4	84
13	Appendix 13	Piping Material Class Specification: BC2 – 300#	4	88
14	Appendix 14	Piping Material Class Specification: BS1 – 300#	4	92
15	Appendix 15	Piping Material Class Specification: BG1 – 300#	5	96
16	Appendix 16	Piping Material Class Specification: BX1 – 300#	4	101
17	Appendix 17	Piping Material Class Specification: CC1 – 600#	4	105
18	Appendix 18	Piping Material Class Specification: CX1 – 600#	4	109
19	Appendix 19	Piping Material Class Specification: DC1 – 900#	5	113
20	Appendix 20	Piping Material Class Specification: DC2 – 900#	5	118
21	Appendix 21	Piping Material Class Specification: DC6 – 900#	5	123
22	Appendix 22	Piping Material Class Specification: DS1 – 900#	5	128
23	Appendix 23	Piping Material Class Specification: DX1 – 900#	5	133
24	Appendix 24	Piping Material Class Specification: EC1 – 1500#	4	138
25	Appendix 25	Piping Material Class Specification: EX1 – 1500#	4	142
26	Appendix 26	Piping Material Class Specification: FC1 – 2500#	4	146
27	Appendix 27	Piping Material Class Specification: FC2 – 2500#	4	150
28	Appendix 28	Piping Material Class Specification: FC3 – 2500#	4	154
29	Appendix 29	Piping Material Class Specification: FS1 – 2500#	5	158
30	Appendix 30	Piping Material Class Specification: GC1 – API 5000#	4	163
31	Appendix 31	Piping Material Class Specification: HC1 – API 10000#	4	167

Văn bản này được xác thực tại https://eoffice.vietsov.com.vn với số định danh: 627/25-CV-XDM/NIPI

Description	End Conn.	Sch./Rating	Standard	Nominal Diameter, in	1/2	3/4	1	1.1/2	2	2.1/2	3	4	6	8	10	12	14	16	18	20	24	Notes
				ASME Schedule	160	160	160	160	80	80	80	40	40	40	40	STD	STD	STD	STD	STD	STD	
				Wall Thickness, mm	4.78	5.56	6.35	7.14	5.54	7.01	7.62	6.02	7.11	8.18	9.27	9.53	9.53	9.53	9.53	9.53	9.53	
Pipe Seamless	PE		ASME B36.10M	ASTM A106 Gr.B																		2
Pipe Seamless	BE		ASME B36.10M	ASTM A106 Gr.B																		2
Pipe	BE		ASME B36.10M	API 5L Gr.B Welded (LSAW) →																		2,3
Elbow LR 90 Deg.	BW	As Pipe	ASME B16.9	ASTM A234 Gr. WPB																		
Elbow LR 45 Deg.	BW	As Pipe	ASME B16.9	ASTM A234 Gr. WPB																		
Elbow 90 Deg.	SW	6000#	ASME B16.11	ASTM A105N																		
Elbow 45 Deg.	SW	6000#	ASME B16.11	ASTM A105N																		
Equal Tee	BW	As Pipe	ASME B16.9	ASTM A234 Gr. WPB																		
Reducing Tee	BW	As Pipe	ASME B16.9	ASTM A234 Gr. WPB																		
Equal Tee	SW	6000#	ASME B16.11	ASTM A105N																		
Reducing Tee	SW	6000#	ASME B16.11	ASTM A105N																		
End Cap	BW	As Pipe	ASME B16.9	ASTM A234 Gr. WPB																		
End Cap	SW	6000#	ASME B16.11	ASTM A105N																		
End Cap	THR'D	3000#	ASME B16.11	ASTM A105N																		1
Eccentric Reducer	BW	As Pipe	ASME B16.9	ASTM A234 Gr. WPB																		
Concentric Reducer	BW	As Pipe	ASME B16.9	ASTM A234 Gr. WPB																		
Concentric Swage	BLE/PSE	As Pipe	MSS SP-95	ASTM A105N																		
Eccentric Swage	BLE/PSE	As Pipe	MSS SP-95	ASTM A105N																		
Concentric Swage	PBE	As Pipe	MSS SP-95	ASTM A105N																		
Eccentric Swage	PBE	As Pipe	MSS SP-95	ASTM A105N																		
Coupling - Full	SW	6000#	ASME B16.11	ASTM A105N																		
Plug Hex Head	THR'D	3000#	ASME B16.11	ASTM A105N																		1
Nipple, 100mm length	PBE	As Pipe	ASME B36.10M	ASTM A106 Gr. B																		2
Nipple, 100mm length	TBE	As Pipe	ASME B36.10M	ASTM A106 Gr. B																		2
Weldolet	BW	As Pipe	MSS SP-97	ASTM A105N																		
Sockolet	SW	6000#	MSS SP-97	ASTM A105N																		
Threadolet	THR'D	3000#	MSS SP-97	ASTM A105N																		1

APPENDIX 01

Maximum Allowable Working Pressure At Temperature									
ASME B16.5 - Material Group 1.1									
Deg.C	0	38	50	100	150	200			
kPa	1960	1960	1920	1770	1580	1380			
Bar	19.6	19.6	19.2	17.7	15.8	13.8			

Material :	**Carbon Steel**
Rating :	**ASME Rating 150**
Service:	**Refer to Class index**
Corrosion Allow. :	**3.0 mm**
Design Code :	**ASME B31.3**

PIPING CLASS **AC1**

Văn bản này được xác thực tại https://eoffice.vietsov.com.vn với số định danh: 627/25-CV-XDM/NIPI

Description	End Conn.	Sch./Rating	Standard	Nominal Diameter, in: 1/2	3/4	1	1.1/2	2	2.1/2	3	4	6	8	10	12	14	16	18	20	24	Notes
Flange - Weld Neck	BW	150# RF	ASME B16.5					ASTM A105N Bore to match pipe													
Flange - Socket Weld	SW	150# RF	ASME B16.5	ASTM A105N																	
Flange - Blind		150# RF	ASME B16.5	ASTM A105N																	
Spectacle Blind		150# RF	ASME B16.48	ASTM A516 Gr.70																	
Spade/ Spacer		150# RF	ASME B16.48													ASTM A516 Gr.70					
Gasket SPWD		150# RF	ASME B16.20	Spiral Wound Gasket, 4,5mm thk., Graphite Filiter, SS outer ring & SS inner ring																	
Stud bolts fully threaded			ASME B18.2.1/ B18.2.2	ASTM A193 Gr.B7/ A194 Gr.2H Sermagard Coated																	

Maximum Allowable Working Pressure At Temperature
ASME B16.5 - Material Group 1.1

Deg.C	0	38	50	100	150	200
kPa	1960	1960	1920	1770	1580	1380
Bar	19.6	19.6	19.2	17.7	15.8	13.8

Material :	**Carbon Steel**
Rating :	**ASME Rating 150**
Service:	**Refer to Class index**
Corrosion Allow. :	**3.0 mm**
Design Code :	**ASME B31.3**

PIPING CLASS **AC1**

APPENDIX 01

Văn bản này được xác thực tại https://eoffice.vietsov.com.vn với số định danh: 627/25-CV-XDM/NIPI

			Nominal Diameter, in		1/2	3/4	1	1.1/2	2	2.1/2	3	4	6	8	10	12	14	16	18	20	24	Notes
Valve Code	Valve Type	Description	Rating	End Conn.																		
BA32AL	Ball	Full Bore	3000 Psi / 800#	SW ends.	Floating, Lever OP.																	4
BA36AL	Valves	Full Bore		SW x NPTF	Floating, Lever OP.																	4
BA31AL		Full Bore		NPTF ends.	Floating, Lever OP.																	4
BAA4AL		Full Bore	150#	RF Flanged	Floating, Lever OP.																	4
BAA4BL		Full Bore	150#	RF Flanged	Trunnion, Lever OP. →																	4
BAA4BG		Full Bore	150#	RF Flanged	Trunnion, Gear OP.																	4
BAA4CL		Reduced Bore	150#	RF Flanged	Floating, Lever OP.																	4
BAA4DL		Reduced Bore	150#	RF Flanged	Trunnion, Lever OP. →																	4
BAA4DG		Reduced Bore	150#	RF Flanged	Trunnion, Gear OP.																	4
GL32AH	Globe		3000 Psi / 800#	SW ends.	Rising Stem OS & Y, Handweel																	
GLA4AH	Valves		150#	RF Flanged	Rising Stem OS & Y, Handweel																	4
GLA4AG			150#	RF Flanged	Rising Stem OS & Y, Gear OP																	4
GA32AH	Gate	Solid Wedge	3000 Psi / 800#	SW ends.	Rising Stem OS & Y, Handweel																	4
GAA4AH	Valves	Solid Wedge	150#	RF Flanged	← Rising Stem OS & Y, Handweel																	4
GAA4GH		Flexible Wedge	150#	RF Flanged	Rising Stem OS & Y, Handweel																	4
GAA4GG		Flexible Wedge	150#	RF Flanged	Rising Stem OS & Y, Gear OP.																	4
CH32AN	Check	Piston	3000 Psi / 800#	SW ends.	Horizontal type																	4
CHA4AN	Valves	Piston	150#	RF Flanged	Horizontal type																	4
CHA4BN		Swing	150#	RF Flanged	Horizontal & Vertical type																	4
CHA4CN		Wafer	150#	RF Wafer	Horizontal & Vertical type																	4
BUA4AL	Butterfly	Full Lug Type	150#	RF Wafer	Lever OP.																	4
BUA4AG	Valves	Full Lug Type	150#	RF Wafer	Gear OP.																	4
NV32AT	Needle		3000 Psi / 800#	SW ends.	Inside Screw, T-bar OP.																	4
NV36AT	Valves			SW x NPTF	Inside Screw, T-bar OP.																	4
NV31AT				NPTF ends.	Inside Screw, T-bar OP.																	4
PLA4AL	Plug	Short-Pattern	150#	RF Flanged	Lever OP.																	4
PLA4BG	Valves	Venturi-Pattern	150#	RF Flanged	Gear OP.																	4
MVA9AT	Monoflange	Integral Body	150#	RF Flanged x	Single Block & Bleed, T-bar OP.																	4
	Valves			NPTF ends.																		

APPENDIX 01

Maximum Allowable Working Pressure At Temperature										
ASME B16.5 - Material Group 1.1										
Deg.C	0	38	50	100	150	200				
kPa	1960	1960	1920	1770	1580	1380				
Bar	19.6	19.6	19.2	17.7	15.8	13.8				

Material :	**Carbon Steel**
Rating :	**ASME Rating 150**
Service:	**Refer to Class index**
Corrosion Allow. :	**3.0 mm**
Design Code :	**ASME B31.3**

PIPING CLASS
AC1
Sheet 3 of 4

Văn bản này được xác thực tại https://eoffice.vietsov.com.vn với số định danh: 627/25-CV-XDM/NIPI

BRANCH CONNECTIONS

1 Equal Tee BW.
2 Reducing Tee BW.
3 Equal Tee SW.
4 Reducing Tee SW.
5 Weldolet
6 Sockolet

Nominal Diameter, in		BRANCH SIZE 1/2	3/4	1	1.1/2	2	2.1/2	3	4	6	8	10	12	14	16	18	20	24	Notes
	24	6	6	6	6	5	5	5	5	5	5	5	2	2	2	2	2	1	
	20	6	6	6	6	5	5	5	5	5	5	2	2	2	2	2	1		
	18	6	6	6	6	5	5	5	5	5	5	2	2	2	2	1			
	16	6	6	6	6	5	5	5	5	5	2	2	2	2	1				
	14	6	6	6	6	5	5	5	5	5	2	2	2	1					
H	12	6	6	6	6	5	5	5	5	2	2	2	1						
E	10	6	6	6	6	5	5	5	2	2	2	1							
A	8	6	6	6	6	5	5	5	2	2	1								
D	6	6	6	6	6	5	2	2	2	1									
E	4	6	6	6	6	2	2	2	1										
R	3	6	6	6	6	2	2	1											
	2.1/2	6	6	6	6	2	1												
S	2	6	6	6	2	1													
I	1.1/2	4	4	4	3														
Z	1	4	4	3															
E	3/4	4	3																
	1/2	3																	

NOTES :

1. Screwed connections shall be NPT taper/ taper combination in accordance with ASME B1.20.1.
2. Pipe API 5L Gr. B seamless is an acceptable substitute for ASTM A106 Gr. B where specified.
3. Welded pipe type shall be longitudinal SAW, 100% Radiographed, Quality factors = 1 (refer to ASME B31.3 - Table A-1B)
4. Refer to data sheet for Manual Valves: VSP-NIPI-TYP-TS-PI1-DS

APPENDIX 01

Maximum Allowable Working Pressure At Temperature ASME B16.5 - Material Group 1.1									
Deg.C	0	38	50	100	150	200			
kPa	1960	1960	1920	1770	1580	1380			
Bar	19.6	19.6	19.2	17.7	15.8	13.8			

Material :	**Carbon Steel**
Rating :	**ASME Rating 150**
Service:	**Refer to Class index**
Corrosion Allow. :	**3.0 mm**
Design Code :	**ASME B31.3**

PIPING CLASS **AC1**

Văn bản này được xác thực tại https://eoffice.vietsov.com.vn với số định danh: 627/25-CV-XDM/NIPI

PIPING MATERIAL CLASS SPECIFICATION: AC2 - 150#

	Nominal Diameter, in	1/2	3/4	1	1.1/2	2	2.1/2	3	4	6	8	10	12	14	16	18	20	24	Notes
	ASME Schedule	160	160	160	160	80	80	80	40	40	40	40	STD	STD	STD	STD	STD	STD	
	Wall Thickness, mm	4.78	5.56	6.35	7.14	5.54	7.01	7.62	6.02	7.11	8.18	9.27	9.53	9.53	9.53	9.53	9.53	9.53	

Description	End Conn.	Sch./Rating	Standard																
Pipe Seamless	PE		ASME B36.10M	ASTM A106 Gr.B															2
Pipe Seamless	BE		ASME B36.10M					ASTM A106 Gr.B											2
Pipe	BE		ASME B36.10M					API 5L Gr.B Welded (LSAW) →											2,3
Elbow LR 90 Deg	BW	As Pipe	ASME B16.9					ASTM A234 Gr. WPB											
Elbow LR 45 Deg	BW	As Pipe	ASME B16.9					ASTM A234 Gr. WPB											
Elbow 90 Deg.	SW	6000#	ASME B16.11	ASTM A105N															
Elbow 45 Deg.	SW	6000#	ASME B16.11	ASTM A105N															
Equal Tee	BW	As Pipe	ASME B16.9					ASTM A234 Gr. WPB											
Reducing Tee	BW	As Pipe	ASME B16.9					ASTM A234 Gr. WPB											
Equal Tee	SW	6000#	ASME B16.11	ASTM A105N															
Reducing Tee	SW	6000#	ASME B16.11	ASTM A105N															
End Cap	BW	As Pipe	ASME B16.9					ASTM A234 Gr. WPB											
End Cap	SW	6000#	ASME B16.11	ASTM A105N															
End Cap	THR'D	3000#	ASME B16.11	ASTM A105N															1
Eccentric Reducer	BW	As Pipe	ASME B16.9					ASTM A234 Gr. WPB											
Concentric Reducer	BW	As Pipe	ASME B16.9					ASTM A234 Gr. WPB											
Concentric Swage	BLE/PSE	As Pipe	MSS SP-95	ASTM A105N															
Eccentric Swage	BLE/PSE	As Pipe	MSS SP-95	ASTM A105N															
Concentric Swage	PBE	As Pipe	MSS SP-95	ASTM A105N															
Eccentric Swage	PBE	As Pipe	MSS SP-95	ASTM A105N															
Coupling - Full	SW	6000#	ASME B16.11	ASTM A105N															
Plug Hex Head	THR'D	3000#	ASME B16.11	ASTM A105N															1
Nipple, 100mm length	PBE	As Pipe	ASME B36.10M	ASTM A106 Gr. B															2
Nipple, 100mm length	TBE	As Pipe	ASME B36.10M	ASTM A106 Gr. B															2
Weldolet	BW	As Pipe	MSS SP-97					ASTM A105N											
Sockolet	SW	6000#	MSS SP-97	ASTM A105N															
Threadolet	THR'D	3000#	MSS SP-97	ASTM A105N															1

Maximum Allowable Working Pressure At Temperature

ASME B16.5 - Material Group 1.1

Deg.C	0	38	50	100	150	200
kPa	1960	1960	1920	1770	1580	1380
Bar	19.6	19.6	19.2	17.7	15.8	13.8

Material : **Carbon Steel**
Rating : **ASME Rating 150**
Service: **Refer to Class index**
Corrosion Allow. : **3.0 mm**
Design Code : **ASME B31.3**

PIPING CLASS **AC2**

Sheet 1 of 4

APPENDIX 02

Văn bản này được xác thực tại https://eoffice.vietsov.com.vn với số định danh: 627/25-CV-XDM/NIPI

PIPING MATERIAL CLASS SPECIFICATION: AC2 - 150#

Description	End Conn.	Sch./Rating	Standard	Nominal Diameter, in: 1/2	3/4	1	1.1/2	2	2.1/2	3	4	6	8	10	12	14	16	18	20	24	Notes
Flange - Weld Neck	BW	150# RF	ASME B16.5					ASTM A105N Bore to match pipe													
Flange - Socket Weld	SW	150# RF	ASME B16.5	ASTM A105N																	
Flange - Blind		150# RF	ASME B16.5	ASTM A105N																	
Spectacle Blind		150# RF	ASME B16.48	ASTM A516 Gr.70																	
Spade/ Spacer		150# RF	ASME B16.48												ASTM A516 Gr.70						
Gasket SPWD		150# RF	ASME B16.20	Spiral Wound Gasket, 4,5mm thk., Graphite Fillter, SS outer ring & SS inner ring																	
Stud bolts fully threaded			ASME B18.2.1/ B18.2.2	ASTM A193 Gr.B7/ A194 Gr.2H Sermagard Coated																	

APPENDIX 02

Maximum Allowable Working Pressure At Temperature									
ASME B16.5 - Material Group 1.1									
Deg.C	0	38	50	100	150	200			
kPa	1960	1960	1920	1770	1580	1380			
Bar	19.6	19.6	19.2	17.7	15.8	13.8			

Material : **Carbon Steel**
Rating : **ASME Rating 150**
Service: **Refer to Class index**
Corrosion Allow. : **3.0 mm**
Design Code : **ASME B31.3**

PIPING CLASS **AC2**

Văn bản này được xác thực tại https://eoffice.vietsov.com.vn với số định danh: 627/25-CV-XDM/NIPI

Valve Code	Valve Type	Description	Rating	End Conn.	Nominal Diameter, in: 1/2	3/4	1	1.1/2	2	2.1/2	3	4	6	8	10	12	14	16	18	20	24	Notes
BA32AL	Ball	Full Bore	3000 Psi / 800#	SW ends.	Floating, Lever OP.																	4
BA36AL	Valves	Full Bore		SW x NPTF	Floating, Lever OP.																	4
BA31AL		Full Bore		NPTF ends.	Floating, Lever OP.																	4
BAA4AL		Full Bore	150#	RF Flanged	Floating, Lever OP.																	4
BAA4BL		Full Bore	150#	RF Flanged	Trunnion, Lever OP. →																	4
BAA4BG		Full Bore	150#	RF Flanged	Trunnion, Gear OP.																	4
BAA4CL		Reduced Bore	150#	RF Flanged	Floating, Lever OP.																	4
BAA4DL		Reduced Bore	150#	RF Flanged	Trunnion, Lever OP. →																	4
BAA4DG		Reduced Bore	150#	RF Flanged	Trunnion, Gear OP.																	4
GL32AH	Globe		3000 Psi / 800#	SW ends.	Rising Stem OS & Y, Handweel																	4
GLA4AH	Valves		150#	RF Flanged	Rising Stem OS & Y, Handweel																	4
GLA4AG			150#	RF Flanged	Rising Stem OS & Y, Gear OP																	4
GA32AH	Gate	Solid Wedge	3000 Psi / 800#	SW ends.	Rising Stem OS & Y, Handweel																	4
GAA4AH	Valves	Solid Wedge	150#	RF Flanged	← Rising Stem OS & Y, Handweel																	4
GAA4GH		Flexible Wedge	150#	RF Flanged	Rising Stem OS & Y, Handweel																	4
GAA4GG		Flexible Wedge	150#	RF Flanged	Rising Stem OS & Y, Gear OP.																	4
CH32AN	Check	Piston	3000 Psi / 800#	SW ends.	Horizontal type																	4
CHA4AN	Valves	Piston	150#	RF Flanged	Horizontal type																	4
CHA4BN		Swing	150#	RF Flanged	Horizontal & Vertical type																	4
CHA4CN		Wafer	150#	RF Wafer	Horizontal & Vertical type																	4
BUA4AL	Butterfly	Full Lug Type	150#	RF Wafer	Lever OP.																	4
BUA4AG	Valves	Full Lug Type	150#	RF Wafer	Gear OP.																	4
NV32AT	Needle		3000 Psi / 800#	SW ends.	Inside Screw, T-bar OP.																	4
NV36AT	Valves			SW x NPTF	Inside Screw, T-bar OP.																	4
NV31AT				NPTF ends.	Inside Screw, T-bar OP.																	4
PLA4AL	Plug	Short-Pattern	150#	RF Flanged	Lever OP.																	4
PLA4BG	Valves	Venturi-Pattern	150#	RF Flanged	Gear OP.																	4
MVA9AT	Monoflange	Integral Body	150#	RF Flanged x	Single Block & Bleed, T-bar OP.																	4
	Valves			NPTF ends.																		

Maximum Allowable Working Pressure At Temperature

ASME B16.5 - Material Group 1.1

Deg.C	0	38	50	100	150	200
kPa	1960	1960	1920	1770	1580	1380
Bar	19.6	19.6	19.2	17.7	15.8	13.8

Material : **Carbon Steel**
Rating : **ASME Rating 150**
Service: **Refer to Class index**
Corrosion Allow. : **3.0 mm**
Design Code : **ASME B31.3**

PIPING CLASS **AC2**

APPENDIX 02

Văn bản này được xác thực tại https://eoffice.vietsov.com.vn với số định danh: 627/25-CV-XDM/NIPI

BRANCH CONNECTIONS

1 Equal Tee BW.
2 Reducing Tee BW.
3 Equal Tee SW.
4 Reducing Tee SW.
5 Weldolet
6 Sockolet

Nominal Diameter, in		BRANCH SIZE 1/2	3/4	1	1.1/2	2	2.1/2	3	4	6	8	10	12	14	16	18	20	24	Notes
24		6	6	6	6	5	5	5	5	5	5	5	2	2	2	2	2	1	
20		6	6	6	6	5	5	5	5	5	5	2	2	2	2	2	1		
18		6	6	6	6	5	5	5	5	5	5	2	2	2	2	1			
16		6	6	6	6	5	5	5	5	5	2	2	2	2	1				
14		6	6	6	6	5	5	5	5	5	2	2	2	1					
12	H	6	6	6	6	5	5	5	5	2	2	2	1						
10	E	6	6	6	6	5	5	5	2	2	2	1							
8	A	6	6	6	6	5	5	5	2	2	1								
6	D	6	6	6	6	5	2	2	2	1									
4	E	6	6	6	6	2	2	2	1										
3	R	6	6	6	6	2	2	1											
2.1/2		6	6	6	6	2	1												
2	S	6	6	6	2	1													
1.1/2	I	4	4	4	3														
1	Z	4	4	3															
3/4	E	4	3																
1/2		3																	

NOTES :

1. Screwed connections shall be NPT taper/ taper combination in accordance with ASME B1.20.1.
2. Pipe API 5L Gr. B seamless is an acceptable substitute for ASTM A106 Gr. B where specified.
3. Welded pipe type shall be longitudinal SAW, 100% Radiographed, Quality factors = 1 (refer to ASME B31.3 - Table A-1B)
4. Refer to data sheet for Manual Valves: VSP-NIPI-TYP-TS-PI1-DS

APPENDIX 02

Maximum Allowable Working Pressure At Temperature ASME B16.5 - Material Group 1.1									
Deg.C	0	38	50	100	150	200			
kPa	1960	1960	1920	1770	1580	1380			
Bar	19.6	19.6	19.2	17.7	15.8	13.8			

Material : **Carbon Steel**
Rating : **ASME Rating 150**
Service: **Refer to Class index**
Corrosion Allow. : **3.0 mm**
Design Code : **ASME B31.3**

PIPING CLASS **AC2**

Văn bản này được xác thực tại https://eoffice.vietsov.com.vn với số định danh: 627/25-CV-XDM/NIPI

PIPING MATERIAL CLASS SPECIFICATION: AC3 - 150#

Description	End Conn.	Sch./Rating	Standard	Nominal Diameter, in	1/2	3/4	1	1.1/2	2	2.1/2	3	4	6	8	10	12	14	16	18	20	24	Notes
				ASME Schedule	160	160	160	160	80	80	80	40	40	40	40	STD	STD	STD	STD	STD	STD	
				Wall Thickness, mm	4.78	5.56	6.35	7.14	5.54	7.01	7.62	6.02	7.11	8.18	9.27	9.53	9.53	9.53	9.53	9.53	9.53	
Pipe Seamless	PE		ASME B36.10M	ASTM A106 Gr.B																		2
Pipe Seamless	BE		ASME B36.10M	ASTM A106 Gr.B																		2
Pipe	BE		ASME B36.10M	API 5L Gr.B Welded (LSAW) →																		2,3
Elbow LR 90 Deg	BW	As Pipe	ASME B16.9	ASTM A234 Gr. WPB																		
Elbow LR 45 Deg	BW	As Pipe	ASME B16.9	ASTM A234 Gr. WPB																		
Elbow 90 Deg.	SW	6000#	ASME B16.11	ASTM A105N																		
Elbow 45 Deg.	SW	6000#	ASME B16.11	ASTM A105N																		
Equal Tee	BW	As Pipe	ASME B16.9	ASTM A234 Gr. WPB																		
Reducing Tee	BW	As Pipe	ASME B16.9	ASTM A234 Gr. WPB																		
Equal Tee	SW	6000#	ASME B16.11	ASTM A105N																		
Reducing Tee	SW	6000#	ASME B16.11	ASTM A105N																		
End Cap	BW	As Pipe	ASME B16.9	ASTM A234 Gr. WPB																		
End Cap	SW	6000#	ASME B16.11	ASTM A105N																		
End Cap	THR'D	3000#	ASME B16.11	ASTM A105N																		1
Eccentric Reducer	BW	As Pipe	ASME B16.9	ASTM A234 Gr. WPB																		
Concentric Reducer	BW	As Pipe	ASME B16.9	ASTM A234 Gr. WPB																		
Concentric Swage	BLE/PSE	As Pipe	MSS SP-95	ASTM A105N																		
Eccentric Swage	BLE/PSE	As Pipe	MSS SP-95	ASTM A105N																		
Concentric Swage	PBE	As Pipe	MSS SP-95	ASTM A105N																		
Eccentric Swage	PBE	As Pipe	MSS SP-95	ASTM A105N																		
Coupling - Full	SW	6000#	ASME B16.11	ASTM A105N																		
Plug Hex Head	THR'D	3000#	ASME B16.11	ASTM A105N																		1
Nipple, 100mm length	PBE	As Pipe	ASME B36.10M	ASTM A106 Gr. B																		2
Nipple, 100mm length	TBE	As Pipe	ASME B36.10M	ASTM A106 Gr. B																		2
Weldolet	BW	As Pipe	MSS SP-97	ASTM A105N																		
Sockolet	SW	6000#	MSS SP-97	ASTM A105N																		
Threadolet	THR'D	3000#	MSS SP-97	ASTM A105N																		1

Maximum Allowable Working Pressure At Temperature

ASME B16.5 - Material Group 1.1

Deg.C	0	38	50	100	150	200			
kPa	1960	1960	1920	1770	1580	1380			
Bar	19.6	19.6	19.2	17.7	15.8	13.8			

Material : **Carbon Steel**
Rating : **ASME Rating 150**
Service: **Refer to Class index**
Corrosion Allow. : **3.0 mm**
Design Code : **ASME B31.3**

PIPING CLASS **AC3**

Sheet 1 of 4

APPENDIX 03

Văn bản này được xác thực tại https://eoffice.vietsov.com.vn với số định danh: 627/25-CV-XDM/NIPI

PIPING MATERIAL CLASS SPECIFICATION: AC3 - 150#

Description	End Conn.	Sch./Rating	Standard	Nominal Diameter, in: 1/2	3/4	1	1.1/2	2	2.1/2	3	4	6	8	10	12	14	16	18	20	24	Notes
Flange - Weld Neck	BW	150# RF	ASME B16.5					ASTM A105N Bore to match pipe													
Flange - Socket Weld	SW	150# RF	ASME B16.5	ASTM A105N																	
Flange - Blind		150# RF	ASME B16.5	ASTM A105N																	
Spectacle Blind		150# RF	ASME B16.48	ASTM A516 Gr.70																	
Spade/ Spacer		150# RF	ASME B16.48												ASTM A516 Gr.70						
Gasket SPWD		150# RF	ASME B16.20	Spiral Wound Gasket, 4,5mm thk., Graphite Fillter, SS outer ring & SS inner ring																	
Stud bolts fully threaded			ASME B18.2.1/ B18.2.2	ASTM A193 Gr.B7/ A194 Gr.2H Sermagard Coated																	

APPENDIX 03

Maximum Allowable Working Pressure At Temperature

ASME B16.5 - Material Group 1.1

Deg.C	0	38	50	100	150	200
kPa	1960	1960	1920	1770	1580	1380
Bar	19.6	19.6	19.2	17.7	15.8	13.8

Material : **Carbon Steel**
Rating : **ASME Rating 150**
Service: **Refer to Class index**
Corrosion Allow. : **3.0 mm**
Design Code : **ASME B31.3**

PIPING CLASS **AC3**

Văn bản này được xác thực tại https://eoffice.vietsov.com.vn với số định danh: 627/25-CV-XDM/NIPI

PIPING MATERIAL CLASS SPECIFICATION: AC3 - 150#

Valve Code	Valve Type	Description	Rating	End Conn.	Nominal Diameter, in: 1/2	3/4	1	1.1/2	2	2.1/2	3	4	6	8	10	12	14	16	18	20	24	Notes
BA32AL	Ball	Full Bore	3000 Psi / 800#	SW ends.	Floating, Lever OP.																	4
BA36AL	Valves	Full Bore		SW x NPTF	Floating, Lever OP.																	4
BA31AL		Full Bore		NPTF ends.	Floating, Lever OP.																	4
BAA4AL		Full Bore	150#	RF Flanged	Floating, Lever OP.																	4
BAA4BL		Full Bore	150#	RF Flanged	Trunnion, Lever OP. →																	4
BAA4BG		Full Bore	150#	RF Flanged	Trunnion, Gear OP.																	4
BAA4CL		Reduced Bore	150#	RF Flanged	Floating, Lever OP.																	4
BAA4DL		Reduced Bore	150#	RF Flanged	Trunnion, Lever OP. →																	4
BAA4DG		Reduced Bore	150#	RF Flanged	Trunnion, Gear OP.																	4
GL32AH	Globe		3000 Psi / 800#	SW ends.	Rising Stem OS & Y, Handweel																	4
GLA4AH	Valves		150#	RF Flanged	Rising Stem OS & Y, Handweel																	4
GLA4AG			150#	RF Flanged	Rising Stem OS & Y, Gear OP																	4
GA32AH	Gate	Solid Wedge	3000 Psi / 800#	SW ends.	Rising Stem OS & Y, Handweel																	4
GAA4AH	Valves	Solid Wedge	150#	RF Flanged	← Rising Stem OS & Y, Handweel																	4
GAA4GH		Flexible Wedge	150#	RF Flanged	Rising Stem OS & Y, Handweel																	4
GAA4GG		Flexible Wedge	150#	RF Flanged	Rising Stem OS & Y, Gear OP.																	4
CH32AN	Check	Piston	3000 Psi / 800#	SW ends.	Horizontal type																	4
CHA4AN	Valves	Piston	150#	RF Flanged	Horizontal type																	4
CHA4BN		Swing	150#	RF Flanged	Horizontal & Vertical type																	4
CHA4CN		Wafer	150#	RF Wafer	Horizontal & Vertical type																	4
BUA4AL	Butterfly	Full Lug Type	150#	RF Wafer	Lever OP.																	4
BUA4AG	Valves	Full Lug Type	150#	RF Wafer	Gear OP.																	4
NV32AT	Needle		3000 Psi / 800#	SW ends.	Inside Screw, T-bar OP.																	4
NV36AT	Valves			SW x NPTF	Inside Screw, T-bar OP.																	4
NV31AT				NPTF ends.	Inside Screw, T-bar OP.																	4
PLA4AL	Plug	Short-Pattern	150#	RF Flanged	Lever OP.																	4
PLA4BG	Valves	Venturi-Pattern	150#	RF Flanged	Gear OP.																	4
MVA9AT	Monoflange Valves	Integral Body	150#	RF Flanged x NPTF ends.	Single Block & Bleed, T-bar OP.																	4

Maximum Allowable Working Pressure At Temperature
ASME B16.5 - Material Group 1.1

Deg.C	0	38	50	100	150	200
kPa	1960	1960	1920	1770	1580	1380
Bar	19.6	19.6	19.2	17.7	15.8	13.8

Material : **Carbon Steel**
Rating : **ASME Rating 150**
Service: **Refer to Class index**
Corrosion Allow. : **3.0 mm**
Design Code : **ASME B31.3**

PIPING CLASS **AC3**

Sheet 3 of 4

APPENDIX 03

Văn bản này được xác thực tại https://eoffice.vietsov.com.vn với số định danh: 627/25-CV-XDM/NIPI

BRANCH CONNECTIONS

1 Equal Tee BW.
2 Reducing Tee BW.
3 Equal Tee SW.
4 Reducing Tee SW.
5 Weldolet
6 Sockolet

	Nominal Diameter, in	BRANCH SIZE 1/2	3/4	1	1.1/2	2	2.1/2	3	4	6	8	10	12	14	16	18	20	24	Notes
	24	6	6	6	6	5	5	5	5	5	5	5	2	2	2	2	2	1	
	20	6	6	6	6	5	5	5	5	5	5	2	2	2	2	2	1		
	18	6	6	6	6	5	5	5	5	5	5	2	2	2	2	1			
	16	6	6	6	6	5	5	5	5	5	2	2	2	2	1				
	14	6	6	6	6	5	5	5	5	5	2	2	2	1					
H	12	6	6	6	6	5	5	5	5	2	2	2	1						
E	10	6	6	6	6	5	5	5	2	2	2	1							
A	8	6	6	6	6	5	5	5	2	2	1								
D	6	6	6	6	6	5	2	2	2	1									
E	4	6	6	6	6	2	2	2	1										
R	3	6	6	6	6	2	2	1											
	2.1/2	6	6	6	6	2	1												
S	2	6	6	6	2	1													
I	1.1/2	4	4	4	3														
Z	1	4	4	3															
E	3/4	4	3																
	1/2	3																	

NOTES :

1. Screwed connections shall be NPT taper/ taper combination in accordance with ASME B1.20.1.
2. Pipe API 5L Gr. B seamless is an acceptable substitute for ASTM A106 Gr. B where specified.
3. Welded pipe type shall be longitudinal SAW, 100% Radiographed, Quality factors = 1 (refer to ASME B31.3 - Table A-1B)
4. Refer to data sheet for Manual Valves: VSP-NIPI-TYP-TS-PI1-DS

APPENDIX 03

Maximum Allowable Working Pressure At Temperature									
ASME B16.5 - Material Group 1.1									
Deg.C	0	38	50	100	150	200			
kPa	1960	1960	1920	1770	1580	1380			
Bar	19.6	19.6	19.2	17.7	15.8	13.8			

Material : **Carbon Steel**
Rating : **ASME Rating 150**
Service: **Refer to Class index**
Corrosion Allow. : **3.0 mm**
Design Code : **ASME B31.3**

PIPING CLASS **AC3**

Văn bản này được xác thực tại https://eoffice.vietsov.com.vn với số định danh: 627/25-CV-XDM/NIPI

PIPING MATERIAL CLASS SPECIFICATION: AC4 - 150#

	Nominal Diameter, in	1/2	3/4	1	1.1/2	2	2.1/2	3	4	6	8	10	12	14	16	18	20	24	Notes
	ASME Schedule	XXS	XXS	160	160	160	80	80	80	40	40	40	STD	STD	STD	STD	STD	STD	
	Wall Thickness, mm	7.47	7.82	6.35	7.14	8.74	7.01	7.62	8.56	7.11	8.18	9.27	9.53	9.53	9.53	9.53	9.53	9.53	

Description	End Conn.	Sch./Rating	Standard																Notes
Pipe Seamless	PE		ASME B36.10M	ASTM A106 Gr.B															2
Pipe Seamless	BE		ASME B36.10M					ASTM A106 Gr.B											2
Pipe	BE		ASME B36.10M					API 5L Gr.B Welded (LSAW) →											2,3
Elbow LR 90 Deg.	BW	As Pipe	ASME B16.9					ASTM A234 Gr. WPB											
Elbow LR 45 Deg.	BW	As Pipe	ASME B16.9					ASTM A234 Gr. WPB											
Elbow 90 Deg.	SW	6000#	ASME B16.11	ASTM A105N															
Elbow 45 Deg.	SW	6000#	ASME B16.11	ASTM A105N															
Equal Tee	BW	As Pipe	ASME B16.9					ASTM A234 Gr. WPB											
Reducing Tee	BW	As Pipe	ASME B16.9					ASTM A234 Gr. WPB											
Equal Tee	SW	6000#	ASME B16.11	ASTM A105N															
Reducing Tee	SW	6000#	ASME B16.11	ASTM A105N															
End Cap	BW	As Pipe	ASME B16.9					ASTM A234 Gr. WPB											
End Cap	SW	6000#	ASME B16.11	ASTM A105N															
End Cap	THR'D	3000#	ASME B16.11	ASTM A105N															1
Eccentric Reducer	BW	As Pipe	ASME B16.9					ASTM A234 Gr. WPB											
Concentric Reducer	BW	As Pipe	ASME B16.9					ASTM A234 Gr. WPB											
Concentric Swage	BLE/PSE	As Pipe	MSS SP-95	ASTM A105N															
Eccentric Swage	BLE/PSE	As Pipe	MSS SP-95	ASTM A105N															
Concentric Swage	PBE	As Pipe	MSS SP-95	ASTM A105N															
Eccentric Swage	PBE	As Pipe	MSS SP-95	ASTM A105N															
Coupling - Full	SW	6000#	ASME B16.11	ASTM A105N															
Plug Hex Head	THR'D	3000#	ASME B16.11	ASTM A105N															1
Nipple, 100mm length	PBE	As Pipe	ASME B36.10M	ASTM A106 Gr. B															2
Nipple, 100mm length	TBE	As Pipe	ASME B36.10M	ASTM A106 Gr. B															2
Weldolet	BW	As Pipe	MSS SP-97					ASTM A105N											
Sockolet	SW	6000#	MSS SP-97	ASTM A105N															
Threadolet	THR'D	3000#	MSS SP-97	ASTM A105N															1

Maximum Allowable Working Pressure At Temperature

ASME B16.5 - Material Group 1.1

Deg.C	0	38	50	100	150	200
kPa	1960	1960	1920	1770	1580	1380
Bar	19.6	19.6	19.2	17.7	15.8	13.8

Material : **Carbon Steel**
Rating : **ASME Rating 150**
Service: **Refer to Class index**
Corrosion Allow. : **5.0 mm**
Design Code : **ASME B31.3**

PIPING CLASS **AC4**

Sheet 1 of 4

APPENDIX 04

Văn bản này được xác thực tại https://eoffice.vietsov.com.vn với số định danh: 627/25-CV-XDM/NIPI

PIPING MATERIAL CLASS SPECIFICATION: AC4 - 150#

Description	End Conn.	Sch./Rating	Standard	Nominal Diameter, in: 1/2	3/4	1	1.1/2	2	2.1/2	3	4	6	8	10	12	14	16	18	20	24	Notes
Flange - Weld Neck	BW	150# RF	ASME B16.5					ASTM A105N Bore to match pipe													
Flange - Socket Weld	SW	150# RF	ASME B16.5	ASTM A105N																	
Flange - Blind		150# RF	ASME B16.5	ASTM A105N																	
Spectacle Blind		150# RF	ASME B16.48	ASTM A516 Gr.70																	
Spade/ Spacer		150# RF	ASME B16.48												ASTM A516 Gr.70						
Gasket SPWD		150# RF	ASME B16.20	Spiral Wound Gasket, 4,5mm thk., Graphite Fillter, SS outer ring & SS inner ring																	
Stud bolts fully threaded			ASME B18.2.1/ B18.2.2	ASTM A193 Gr.B7/ A194 Gr.2H Sermagard Coated																	

APPENDIX 04

Maximum Allowable Working Pressure At Temperature

ASME B16.5 - Material Group 1.1

Deg.C	0	38	50	100	150	200
kPa	1960	1960	1920	1770	1580	1380
Bar	19.6	19.6	19.2	17.7	15.8	13.8

Material :	**Carbon Steel**
Rating :	**ASME Rating 150**
Service:	**Refer to Class index**
Corrosion Allow. :	**5.0 mm**
Design Code :	**ASME B31.3**

PIPING CLASS **AC4**

Văn bản này được xác thực tại https://eoffice.vietsov.com.vn với số định danh: 627/25-CV-XDM/NIPI

PIPING MATERIAL CLASS SPECIFICATION: AC4 - 150#

Valve Code	Valve Type	Description	Rating	End Conn.	Nominal Diameter, in: 1/2	3/4	1	1.1/2	2	2.1/2	3	4	6	8	10	12	14	16	18	20	24	Notes
BA32AL	Ball Valves	Full Bore	3000 Psi / 800#	SW ends.	Floating, Lever OP.																	4
BA36AL		Full Bore		SW x NPTF	Floating, Lever OP.																	4
BA31AL		Full Bore		NPTF ends.	Floating, Lever OP.																	4
BAA4AL		Full Bore	150#	RF Flanged	Floating, Lever OP.																	4
BAA4BL		Full Bore	150#	RF Flanged	Trunnion, Lever OP. →																	4
BAA4BG		Full Bore	150#	RF Flanged	Trunnion, Gear OP.																	4
BAA4CL		Reduced Bore	150#	RF Flanged	Floating, Lever OP.																	4
BAA4DL		Reduced Bore	150#	RF Flanged	Trunnion, Lever OP. →																	4
BAA4DG		Reduced Bore	150#	RF Flanged	Trunnion, Gear OP.																	4
GL32AH	Globe Valves		3000 Psi / 800#	SW ends.	Rising Stem OS & Y, Handweel																	4
GLA4AH			150#	RF Flanged	Rising Stem OS & Y, Handweel																	4
GLA4AG			150#	RF Flanged	Rising Stem OS & Y, Gear OP																	4
GA32AH	Gate Valves	Solid Wedge	3000 Psi / 800#	SW ends.	Rising Stem OS & Y, Handweel																	4
GAA4AH		Solid Wedge	150#	RF Flanged	← Rising Stem OS & Y, Handweel																	4
GAA4GH		Flexible Wedge	150#	RF Flanged	Rising Stem OS & Y, Handweel																	4
GAA4GG		Flexible Wedge	150#	RF Flanged	Rising Stem OS & Y, Gear OP.																	4
CH32AN	Check Valves	Piston	3000 Psi / 800#	SW ends.	Horizontal type																	4
CHA4AN		Piston	150#	RF Flanged	Horizontal type																	4
CHA4BN		Swing	150#	RF Flanged	Horizontal & Vertical type																	4
CHA4CN		Wafer	150#	RF Wafer	Horizontal & Vertical type																	4
BUA4AL	Butterfly Valves	Full Lug Type	150#	RF Wafer	Lever OP.																	4
BUA4AG		Full Lug Type	150#	RF Wafer	Gear OP.																	4
NV32AT	Needle Valves		3000 Psi / 800#	SW ends.	Inside Screw, T-bar OP.																	4
NV36AT				SW x NPTF	Inside Screw, T-bar OP.																	4
NV31AT				NPTF ends.	Inside Screw, T-bar OP.																	4
PLA4AL	Plug Valves	Short-Pattern	150#	RF Flanged	Lever OP.																	4
PLA4BG		Venturi-Pattern	150#	RF Flanged	Gear OP.																	4
MVA9AT	Monoflange Valves	Integral Body	150#	RF Flanged x NPTF ends.	Single Block & Bleed, T-bar OP.																	4

Maximum Allowable Working Pressure At Temperature
ASME B16.5 - Material Group 1.1

Deg.C	0	38	50	100	150	200
kPa	1960	1960	1920	1770	1580	1380
Bar	19.6	19.6	19.2	17.7	15.8	13.8

Material : **Carbon Steel**
Rating : **ASME Rating 150**
Service: **Refer to Class index**
Corrosion Allow. : **5.0 mm**
Design Code : **ASME B31.3**

PIPING CLASS **AC4**

Sheet 3 of 4

APPENDIX 04

Văn bản này được xác thực tại https://eoffice.vietsov.com.vn với số định danh: 627/25-CV-XDM/NIPI

BRANCH CONNECTIONS

1 Equal Tee BW.
2 Reducing Tee BW.
3 Equal Tee SW.
4 Reducing Tee SW.
5 Weldolet
6 Sockolet

Nominal Diameter, in		BRANCH SIZE 1/2	3/4	1	1.1/2	2	2.1/2	3	4	6	8	10	12	14	16	18	20	24	Notes
	24	6	6	6	6	5	5	5	5	5	5	5	2	2	2	2	2	1	
	20	6	6	6	6	5	5	5	5	5	5	2	2	2	2	2	1		
	18	6	6	6	6	5	5	5	5	5	5	2	2	2	2	1			
	16	6	6	6	6	5	5	5	5	5	2	2	2	2	1				
	14	6	6	6	6	5	5	5	5	5	2	2	2	1					
H	12	6	6	6	6	5	5	5	5	2	2	2	1						
E	10	6	6	6	6	5	5	5	2	2	2	1							
A	8	6	6	6	6	5	5	5	2	2	1								
D	6	6	6	6	6	5	2	2	2	1									
E	4	6	6	6	6	2	2	2	1										
R	3	6	6	6	6	2	2	1											
	2.1/2	6	6	6	6	2	1												
S	2	6	6	6	2	1													
I	1.1/2	4	4	4	3														
Z	1	4	4	3															
E	3/4	4	3																
	1/2	3																	

NOTES :

1. Screwed connections shall be NPT taper/ taper combination in accordance with ASME B1.20.1.
2. Pipe API 5L Gr. B seamless is an acceptable substitute for ASTM A106 Gr. B where specified.
3. Welded pipe type shall be longitudinal SAW, 100% Radiographed, Quality factors = 1 (refer to ASME B31.3 - Table A-1B)
4. Refer to data sheet for Manual Valves: VSP-NIPI-TYP-TS-PI1-DS

APPENDIX 04

Maximum Allowable Working Pressure At Temperature ASME B16.5 - Material Group 1.1									
Deg.C	0	38	50	100	150	200			
kPa	1960	1960	1920	1770	1580	1380			
Bar	19.6	19.6	19.2	17.7	15.8	13.8			

Material : **Carbon Steel**
Rating : **ASME Rating 150**
Service: **Refer to Class index**
Corrosion Allow. : **5.0 mm**
Design Code : **ASME B31.3**

PIPING CLASS **AC4**

Văn bản này được xác thực tại https://eoffice.vietsov.com.vn với số định danh: 627/25-CV-XDM/NIPI

	Nominal Diameter, in	1/2	3/4	1	1.1/2	2	2.1/2	3	4	6	8	10	12	14	16	Notes
	ASME Schedule	160	160	160	160	80	80	80	40	40	40	40	STD	STD	STD	
	Wall Thickness, mm	4.78	5.56	6.35	7.14	5.54	7.01	7.62	6.02	7.11	8.18	9.27	9.53	9.53	9.53	

Description	End Conn.	Sch./Rating	Standard														Notes
Pipe Seamless	PE		ASME B36.10M	ASTM A106 Gr.B Galv.													1,2,3
Pipe Seamless	BE		ASME B36.10M							ASTM A106 Gr.B Galv.							2,3
Elbow LR 90 Deg.	BW	As Pipe	ASME B16.9							ASTM A234 Gr. WPB Galv.							
Elbow LR 45 Deg.	BW	As Pipe	ASME B16.9							ASTM A234 Gr. WPB Galv.							
Elbow 90 Deg.	SW	6000#	ASME B16.11	ASTM A105N Galv.													
Elbow 45 Deg.	SW	6000#	ASME B16.11	ASTM A105N Galv.													
Equal Tee	BW	As Pipe	ASME B16.9							ASTM A234 Gr. WPB Galv.							
Reducing Tee	BW	As Pipe	ASME B16.9							ASTM A234 Gr. WPB Galv.							
Equal Tee	SW	6000#	ASME B16.11	ASTM A105N Galv.													
Reducing Tee	SW	6000#	ASME B16.11	ASTM A105N Galv.													
End Cap	BW	As Pipe	ASME B16.9							ASTM A234 Gr. WPB Galv.							
End Cap	SW	6000#	ASME B16.11	ASTM A105N Galv.													
End Cap	THR'D	3000#	ASME B16.11	ASTM A105N Galv.													
Eccentric Reducer	BW	As Pipe	ASME B16.9							ASTM A234 Gr. WPB Galv.							
Concentric Reducer	BW	As Pipe	ASME B16.9							ASTM A234 Gr. WPB Galv.							
Concentric Swage	BLE/PSE	As Pipe	MSS SP-95	ASTM A105N Galv.													
Eccentric Swage	BLE/PSE	As Pipe	MSS SP-95	ASTM A105N Galv.													
Concentric Swage	PBE	As Pipe	MSS SP-95	ASTM A105N Galv.													
Eccentric Swage	PBE	As Pipe	MSS SP-95	ASTM A105N Galv.													
Coupling - Full	SW	6000#	ASME B16.11	ASTM A105N Galv.													
Plug Hex Head	THR'D	3000#	ASME B16.11	ASTM A105N Galv.													1
Nipple, 100mm length	PBE	As Pipe	ASME B36.10M	ASTM A106 Gr. B Galv.													2,3
Nipple, 100mm length	TBE	As Pipe	ASME B36.10M	ASTM A106 Gr. B Galv.													2,3
Weldolet	BW	As Pipe	MSS SP-97							ASTM A105N Galv.							
Sockolet	SW	6000#	MSS SP-97	ASTM A105N Galv.													
Threadolet	THR'D	3000#	MSS SP-97	ASTM A105N Galv.													

APPENDIX 05

Maximum Allowable Working Pressure At Temperature										
ASME B16.5 - Material Group 1.1										
Deg.C	0	38	50	100	150	200				
kPa	1960	1960	1920	1770	1580	1380				
Bar	19.6	19.6	19.2	17.7	15.8	13.8				

Material : **C.S. Galvanised**
Rating : **ASME Rating 150**
Service: **Refer to Class index**
Corrosion Allow. : **1.6 mm**
Design Code : **ASME B31.3**

PIPING CLASS **AC5**

Văn bản này được xác thực tại https://eoffice.vietsov.com.vn với số định danh: 627/25-CV-XDM/NIPI

Description	End Conn.	Sch./Rating	Standard	Nominal Diameter, in: 1/2	3/4	1	1.1/2	2	2.1/2	3	4	6	8	10	12	14	16	Notes
Flange - Weld Neck	BW	150# RF	ASME B16.5					ASTM A105N Galv., Bore to match pipe										
Flange - SCRD	SCRD	150# RF	ASME B16.5	ASTM A105N Galv.														
Flange - Socket Weld	SW	150# RF	ASME B16.5	ASTM A105N Galv.														
Flange - Blind		150# RF	ASME B16.5							ASTM A105N Galv.								
Spectacle Blind		150# RF	ASME B16.48							ASTM A516 Gr.70 Galv.								
Spade/ Spacer		150# RF	ASME B16.48							← ASTM A516 Gr.70 Galv.								
Gasket SPWD		150# RF	ASME B16.20							Spiral Wound Gasket, 4,5mm thk., Graphite Fillter, SS outer ring & SS inner ring								
Stud bolts fully threaded			ASME B18.2.1/ B18.2.2							ASTM A193 Gr.B7/ A194 Gr.2H Sermagard Coated								

APPENDIX 05

Maximum Allowable Working Pressure At Temperature ASME B16.5 - Material Group 1.1									
Deg.C	0	38	50	100	150	200			
kPa	1960	1960	1920	1770	1580	1380			
Bar	19.6	19.6	19.2	17.7	15.8	13.8			

Material : **C.S. Galvanised**
Rating : **ASME Rating 150**
Service: **Refer to Class index**
Corrosion Allow. : **1.6 mm**
Design Code : **ASME B31.3**

PIPING CLASS **AC5**

Văn bản này được xác thực tại https://eoffice.vietsov.com.vn với số định danh: 627/25-CV-XDM/NIPI

			Nominal Diameter, in		1/2	3/4	1	1.1/2	2	2.1/2	3	4	6	8	10	12	14	16	Notes
Valve Code	Valve Type	Description	Rating	End Conn.															
BA32EL	Ball	Full Bore	3000 Psi / 800#	SW ends.	Floating, Lever OP.														4
BA36EL	Valves	Full Bore		SW x NPTF	Floating, Lever OP.														4
BA31EL		Full Bore		NPTF ends.	Floating, Lever OP.														4
																			4
BAA4EL		Full Bore	150#	RF Flanged	Floating, Lever OP.														4
BAA4FL		Full Bore	150#	RF Flanged	Trunnion, Lever OP. →														4
BAA4FG		Full Bore	150#	RF Flanged	Trunnion, Gear OP.														4
BAA4GL		Reduced Bore	150#	RF Flanged	Floating, Lever OP.														4
BAA4HL		Reduced Bore	150#	RF Flanged	Trunnion, Lever OP. →														4
BAA4HG		Reduced Bore	150#	RF Flanged	Trunnion, Gear OP.														4
GL32BH	Globe		3000 Psi / 800#	NPTF ends.	Rising Stem OS & Y, Handweel														4
GLA4BH	Valves		150#	RF Flanged					Rising Stem OS & Y, Handweel										4
GLA4BG			150#	RF Flanged										Rising Stem OS & Y, Gear OP					4
GA32BH	Gate	Solid Wedge	3000 Psi / 800#	NPTF ends.	Rising Stem OS & Y, Handweel														4
GAA4BH	Valves	Solid Wedge	150#	RF Flanged					← Rising Stem OS & Y, Handweel										4
GAA4HH		Flexible Wedge	150#	RF Flanged					Rising Stem OS & Y, Handweel										4
GAA4HG		Flexible Wedge	150#	RF Flanged					Rising Stem OS & Y, Gear OP. →										4
CH32DN	Check	Piston	3000 Psi / 800#	NPTF ends.	Horizontal type														4
CHA4DN	Valves	Piston	150#	RF Flanged	Horizontal type														4
CHA4EN		Swing	150#	RF Flanged					Horizontal & Vertical type										4
CHA4FN		Wafer	150#	RF Wafer					Horizontal & Vertical type										4
BUA4BL	Butterfly	Full Lug Type	150#	RF Wafer					Lever OP.										4
BUA4BG	Valves	Full Lug Type	150#	RF Wafer										Gear OP.					4
NV32BT	Needle		3000 Psi / 800#	SW ends.	Inside Screw, T-bar OP.														4
NV36BT	Valves			SW x NPTF	Inside Screw, T-bar OP.														4
NV31BT				NPTF ends.	Inside Screw, T-bar OP.														4
PLA4DL	Plug	Short-Pattern	150#	RF Flanged					Lever OP.										4
PLA4EG	Valves	Venturi-Pattern	150#	RF Flanged											Gear OP.				4
MVA9BT	Monoflange	Integral Body	150#	RF Flanged x	Single Block & Bleed, T-bar OP.														4
	Valves			NPTF ends.															

Maximum Allowable Working Pressure At Temperature
ASME B16.5 - Material Group 1.1

Deg.C	0	38	50	100	150	200
kPa	1960	1960	1920	1770	1580	1380
Bar	19.6	19.6	19.2	17.7	15.8	13.8

Material : **C.S. Galvanised**
Rating : **ASME Rating 150**
Service: **Refer to Class index**
Corrosion Allow. : **1.6 mm**
Design Code : **ASME B31.3**

PIPING CLASS **AC5**

Sheet 3 of 4

APPENDIX 05

Văn bản này được xác thực tại https://eoffice.vietsov.com.vn với số định danh: 627/25-CV-XDM/NIPI

BRANCH CONNECTIONS

1 Equal Tee BW.
2 Reducing Tee BW.
3 Equal Tee SW.
4 Reducing Tee SW.
5 Weldolet
6 Sockolet

Nominal Diameter, in		BRANCH SIZE 1/2	3/4	1	1.1/2	2	2.1/2	3	4	6	8	10	12	14	16	Notes
	16	6	6	6	6	5	5	5	5	5	2	2	2	2	1	
H	14	6	6	6	6	5	5	5	5	5	2	2	2	1		
E	12	6	6	6	6	5	5	5	5	2	2	2	1			
A	10	6	6	6	6	5	5	5	2	2	2	1				
D	8	6	6	6	6	5	5	5	2	2	1					
E	6	6	6	6	6	5	2	2	2	1						
R	4	6	6	6	6	2	2	2	1							
	3	6	6	6	6	2	2	1								
S	2.1/2	6	6	6	6	2	1									
I	2	6	6	6	2	1										
Z	1.1/2	4	4	4	3											
E	1	4	4	3												
	3/4	4	3													
	1/2	3														

NOTES :

1. Screwed connections shall be NPT taper/ taper combination in accordance with ASME B1.20.1.
2. Pipe API 5L Gr. B seamless is an acceptable substitute for ASTM A106 Gr. B where specified.
3. Welded pipe type shall be longitudinal SAW, 100% Radiographed, Quality factors = 1 (refer to ASME B31.3 - Table A-1B)
4. Refer to data sheet for Manual Valves: VSP-NIPI-TYP-TS-PI1-DS

APPENDIX 05

Maximum Allowable Working Pressure At Temperature ASME B16.5 - Material Group 1.1									
Deg.C	0	38	50	100	150	200			
kPa	1960	1960	1920	1770	1580	1380			
Bar	19.6	19.6	19.2	17.7	15.8	13.8			

Material :	**C.S. Galvanised**
Rating :	**ASME Rating 150**
Service:	**Refer to Class index**
Corrosion Allow. :	**1.6 mm**
Design Code :	**ASME B31.3**

PIPING CLASS **AC5**

Văn bản này được xác thực tại https://eoffice.vietsov.com.vn với số định danh: 627/25-CV-XDM/NIPI

Description	End Conn.	Sch./Rating	Standard	Nominal Diameter, in	1/2	3/4	1	1.1/2	2	2.1/2	3	4	6	8	10	12	14	16	18	20	24	Notes
				ASME Schedule	160	160	160	160	80	80	80	40	40	40	40	STD	STD	STD	STD	STD	STD	
				Wall Thickness, mm	4.78	5.56	6.35	7.14	5.54	7.01	7.62	6.02	7.11	8.18	9.27	9.53	9.53	9.53	9.53	9.53	9.53	
Pipe Seamless	PE		ASME B36.10M		ASTM A333 Gr.6																	
Pipe Seamless	BE		ASME B36.10M						ASTM A333 Gr.6													
Pipe Seamless	BE		ASME B36.10M						ASTM A333 Gr.6 Welded (LSAW) →													2,3
Elbow LR 90 Deg	BW	As Pipe	ASME B16.9						ASTM A420 WPL6													
Elbow LR 45 Deg	BW	As Pipe	ASME B16.9						ASTM A420 WPL6													
Elbow 90 Deg.	SW	6000#	ASME B16.11		ASTM A350 Gr.LF2 CL.1																	
Elbow 45 Deg.	SW	6000#	ASME B16.11		ASTM A350 Gr.LF2 CL.1																	
Equal Tee	BW	As Pipe	ASME B16.9						ASTM A420 WPL6													
Reducing Tee	BW	As Pipe	ASME B16.9						ASTM A420 WPL6													
Equal Tee	SW	6000#	ASME B16.11		ASTM A350 Gr.LF2 CL.1																	
Reducing Tee	SW	6000#	ASME B16.11		ASTM A350 Gr.LF2 CL.1																	
End Cap	BW	As Pipe	ASME B16.9						ASTM A420 WPL6													
End Cap	SW	6000#	ASME B16.11		ASTM A350 Gr.LF2 CL.1																	
End Cap	THR'D	3000#	ASME B16.11		ASTM A350 Gr.LF2 CL.1																	
Eccentric Reducer	BW	As Pipe	ASME B16.9						ASTM A420 WPL6													
Concentric Reducer	BW	As Pipe	ASME B16.9						ASTM A420 WPL6													
Concentric Swage	BLE/PSE	As Pipe	MSS SP-95		ASTM A350 Gr.LF2 CL.1																	
Eccentric Swage	BLE/PSE	As Pipe	MSS SP-95		ASTM A350 Gr.LF2 CL.1																	
Concentric Swage	PBE	As Pipe	MSS SP-95		ASTM A350 Gr.LF2 CL.1																	
Eccentric Swage	PBE	As Pipe	MSS SP-95		ASTM A350 Gr.LF2 CL.1																	
Coupling - Full	SW	6000#	ASME B16.11		ASTM A350 Gr.LF2 CL.1																	
Plug Hex Head	THR'D	3000#	ASME B16.11		ASTM A350 Gr.LF2 CL.1																	1
Nipple, 100mm length	PBE	As Pipe	ASME B36.10M		ASTM A333 Gr.6																	2
Nipple, 100mm length	TBE	As Pipe	ASME B36.10M		ASTM A333 Gr.6																	2
Weldolet	BW	As Pipe	MSS SP-97						ASTM A350 Gr.LF2 CL.1													
Sockolet	SW	6000#	MSS SP-97		ASTM A350 Gr.LF2 CL.1																	
Threadolet	THR'D	3000#	MSS SP-97		ASTM A350 Gr.LF2 CL.1																	

Maximum Allowable Working Pressure At Temperature
ASME B16.5 - Material Group 1.1

Deg.C	0	38	50	100	150	200
kPa	1960	1960	1920	1770	1580	1380
Bar	19.6	19.6	19.2	17.7	15.8	13.8

Material : **Carbon Steel Low Temp.**
Rating : **ASME Rating 150**
Service: **Refer to Class index**
Corrosion Allow. : **3.0 mm**
Design Code : **ASME B31.3**

PIPING CLASS **AC6**

Sheet 1 of 4

APPENDIX 06

Văn bản này được xác thực tại https://eoffice.vietsov.com.vn với số định danh: 627/25-CV-XDM/NIPI

Description	End Conn.	Sch./Rating	Standard	Nominal Diameter, in	1/2	3/4	1	1.1/2	2	2.1/2	3	4	6	8	10	12	14	16	18	20	24	Notes
Flange - Weld Neck	BW	150# RF	ASME B16.5						ASTM A350 Gr.LF2 CL.1 Bore to match pipe													
Flange - Socket Weld	SW	150# RF	ASME B16.5		ASTM A350 Gr.LF2 CL.1																	
Flange - Blind		150# RF	ASME B16.5		ASTM A350 Gr.LF2 CL.1																	
Spectacle Blind		150# RF	ASME B16.48		ASTM A516 Gr.70																	
Spade/ Spacer		150# RF	ASME B16.48														ASTM A516 Gr.70					
Gasket SPWD		150# RF	ASME B16.20		Spiral Wound Gasket, 4,5mm thk., Graphite Fillter, SS outer ring & SS inner ring																	
Stud bolts fully threaded			ASME B18.2.1/ B18.2.2		ASTM A320 Gr.L7 / ASTM A194 Gr.4L Sermagard Coated																	

APPENDIX 06

Maximum Allowable Working Pressure At Temperature										
ASME B16.5 - Material Group 1.1										
Deg.C	0	38	50	100	150	200				
kPa	1960	1960	1920	1770	1580	1380				
Bar	19.6	19.6	19.2	17.7	15.8	13.8				

Material :	**Carbon Steel Low Temp.**
Rating :	**ASME Rating 150**
Service:	**Refer to Class index**
Corrosion Allow. :	**3.0 mm**
Design Code :	**ASME B31.3**

PIPING CLASS **AC6**

Văn bản này được xác thực tại https://eoffice.vietsov.com.vn với số định danh: 627/25-CV-XDM/NIPI

			Nominal Diameter, in	1/2	3/4	1	1.1/2	2	2.1/2	3	4	6	8	10	12	14	16	18	20	24	Notes
Valve Code	Valve Type	Description	Rating	End Conn.																	
BA32IL	Ball	Full Bore	3000 Psi / 800#	SW ends.	Floating, Lever OP.																4
BA36IL	Valves	Full Bore		SW x NPTF	Floating, Lever OP.																4
BA31IL		Full Bore		NPTF ends.	Floating, Lever OP.																4
BAA4IL		Full Bore	150#	RF Flanged	Floating, Lever OP.																4
BAA4JL		Full Bore	150#	RF Flanged	Trunnion, Lever OP. →																4
BAA4JG		Full Bore	150#	RF Flanged	Trunnion, Gear OP.																4
BAA4KL		Reduced Bore	150#	RF Flanged	Floating, Lever OP.																4
BAA4LL		Reduced Bore	150#	RF Flanged	Trunnion, Lever OP. →																4
BAA4LG		Reduced Bore	150#	RF Flanged	Trunnion, Gear OP.																4
GL32CH	Globe		3000 Psi / 800#	SW ends.	← Rising Stem OS & Y, Handweel																
GLA4CH	Valves		150#	RF Flanged	Rising Stem OS & Y, Handweel																4
GLA4CG			150#	RF Flanged	Rising Stem OS & Y, Gear OP																4
GA32CH	Gate	Solid Wedge	3000 Psi / 800#	SW ends.	← Rising Stem OS & Y, Handweel																4
GAA4CH	Valves	Solid Wedge	150#	RF Flanged	← Rising Stem OS & Y, Handweel																4
GAA4IH		Flexible Wedge	150#	RF Flanged	Rising Stem OS & Y, Handweel																4
GAA4IG		Flexible Wedge	150#	RF Flanged	Rising Stem OS & Y, Gear OP. →																4
CH32GN	Check	Piston	3000 Psi / 800#	SW ends.	Horizontal type																4
CHA4GN	Valves	Piston	150#	RF Flanged	Horizontal type																4
CHA4HN		Swing	150#	RF Flanged	Horizontal & Vertical type																4
CHA4IN		Wafer	150#	RF Wafer	Dual Plate Type																4
BUA4CL	Butterfly	Full Lug Type	150#	RF Wafer	Lever OP.																4
BUA4CG	Valves	Full Lug Type	150#	RF Wafer	Gear OP.																4
NV32CT	Needle		3000 Psi / 800#	SW ends.	Inside Screw, T-bar OP.																4
NV36CT	Valves			SW x NPTF	Inside Screw, T-bar OP.																4
NV31CT				NPTF ends.	Inside Screw, T-bar OP.																4
PLA4GL	Plug	Short-Pattern	150#	RF Flanged	Lever OP.																4
PLA4HG	Valves	Venturi-Pattern	150#	RF Flanged	Gear OP.																4
MVA9CT	Monoflange	Integral Body	150#	RF Flanged x	Single Block & Bleed, T-bar OP.																4
	Valves			NPTF ends.																	

APPENDIX 06

Maximum Allowable Working Pressure At Temperature										
ASME B16.5 - Material Group 1.1										
Deg.C	0	38	50	100	150	200				
kPa	1960	1960	1920	1770	1580	1380				
Bar	19.6	19.6	19.2	17.7	15.8	13.8				

Material :	**Carbon Steel Low Temp.**
Rating :	**ASME Rating 150**
Service:	**Refer to Class index**
Corrosion Allow. :	**3.0 mm**
Design Code :	**ASME B31.3**

PIPING CLASS **AC6**

Văn bản này được xác thực tại https://eoffice.vietsov.com.vn với số định danh: 627/25-CV-XDM/NIPI

BRANCH CONNECTIONS

1 Equal Tee BW.
2 Reducing Tee BW.
3 Equal Tee SW.
4 Reducing Tee SW.
5 Weldolet
6 Sockolet

Nominal Diameter, in		BRANCH SIZE																	Notes
		1/2	3/4	1	1.1/2	2	2.1/2	3	4	6	8	10	12	14	16	18	20	24	
	24	6	6	6	6	5	5	5	5	5	5	5	2	2	2	2	2	1	
	20	6	6	6	6	5	5	5	5	5	5	2	2	2	2	2	1		
	18	6	6	6	6	5	5	5	5	5	5	2	2	2	2	1			
	16	6	6	6	6	5	5	5	5	5	2	2	2	2	1				
	14	6	6	6	6	5	5	5	5	5	2	2	2	1					
H	12	6	6	6	6	5	5	5	5	2	2	2	1						
E	10	6	6	6	6	5	5	5	2	2	2	1							
A	8	6	6	6	6	5	5	5	2	2	1								
D	6	6	6	6	6	5	2	2	2	1									
E	4	6	6	6	6	2	2	2	1										
R	3	6	6	6	6	2	2	1											
	2.1/2	6	6	6	6	2	1												
S	2	6	6	6	2	1													
I	1.1/2	4	4	4	3														
Z	1	4	4	3															
E	3/4	4	3																
	1/2	3																	

NOTES :

1. Screwed connections shall be NPT taper/ taper combination in accordance with ASME B1.20.1.
2. Pipe API 5L Gr. B seamless is an acceptable substitute for ASTM A106 Gr. B where specified.
3. Welded pipe type shall be longitudinal SAW, 100% Radiographed, Quality factors = 1 (refer to ASME B31.3 - Table A-1B)
4. Refer to data sheet for Manual Valves: VSP-NIPI-TYP-TS-PI1-DS

APPENDIX 06

Maximum Allowable Working Pressure At Temperature									
ASME B16.5 - Material Group 1.1									
Deg.C	0	38	50	100	150	200			
kPa	1960	1960	1920	1770	1580	1380			
Bar	19.6	19.6	19.2	17.7	15.8	13.8			

Material :	**Carbon Steel Low Temp.**
Rating :	**ASME Rating 150**
Service:	**Refer to Class index**
Corrosion Allow. :	**3.0 mm**
Design Code :	**ASME B31.3**

PIPING CLASS **AC6**

Văn bản này được xác thực tại https://eoffice.vietsov.com.vn với số định danh: 627/25-CV-XDM/NIPI

Description	End Conn.	Sch./Rating	Standard	1/2	3/4	1	1.1/2	2	2.1/2	3	4	6	8	10	12	14	16	Notes
Nominal Diameter, in				1/2	3/4	1	1.1/2	2	2.1/2	3	4	6	8	10	12	14	16	
ASME Schedule				80S	80S	80S	80S	40S	40S	40S	40S	10S	10S	10S	10S	10S	10S	
Wall Thickness, mm				3.73	3.91	4.55	5.08	3.91	5.16	5.49	6.02	3.4	3.76	4.19	4.57	4.78	4.78	
Pipe Seamless	PE		ASME B36.19M	ASTM A312 Gr.TP316														
Pipe Seamless	BE		ASME B36.19M					ASTM A312 Gr.TP316										
Elbow LR 90 Deg	BW	As Pipe	ASME B16.9					ASTM A403-WP316										
Elbow LR 45 Deg	BW	As Pipe	ASME B16.9					ASTM A403-WP316										
Elbow 90 Deg.	SW	3000#	ASME B16.11	ASTM A182-F316														
Elbow 45 Deg.	SW	3000#	ASME B16.11	ASTM A182-F316														
Equal Tee	BW	As Pipe	ASME B16.9					ASTM A403-WP316										
Reducing Tee	BW	As Pipe	ASME B16.9					ASTM A403-WP316										
Equal Tee	SW	3000#	ASME B16.11	ASTM A182-F316														
Reducing Tee	SW	3000#	ASME B16.11	ASTM A182-F316														
End Cap	BW	As Pipe	ASME B16.9					ASTM A403-WP316										
End Cap	SW	3000#	ASME B16.11	ASTM A182-F316														
End Cap	THR'D	3000#	ASME B16.11	ASTM A182-F316														
Eccentric Reducer	BW	As Pipe	ASME B16.9					ASTM A403-WP316										
Concentric Reducer	BW	As Pipe	ASME B16.9					ASTM A403-WP316										
Concentric Swage	BLE/PSE	As Pipe	MSS SP-95	ASTM A182-F316														
Eccentric Swage	BLE/PSE	As Pipe	MSS SP-95	ASTM A182-F316														
Concentric Swage	PBE	As Pipe	MSS SP-95	ASTM A182-F316														
Eccentric Swage	PBE	As Pipe	MSS SP-95	ASTM A182-F316														
Coupling - Full	SW	3000#	ASME B16.11	ASTM A182-F316														
Plug Hex Head	THR'D	3000#	ASME B16.11	ASTM A182-F316														1
Nipple, 100mm length	PBE	As Pipe	ASME B36.19M	ASTM A312 Gr.TP316														
Nipple, 100mm length	TBE	As Pipe	ASME B36.19M	ASTM A312 Gr.TP316														
Weldolet	BW	As Pipe	MSS SP-97					ASTM A182-F316										
Sockolet	SW	3000#	MSS SP-97	ASTM A182-F316														
Threadolet	THR'D	3000#	MSS SP-97	ASTM A182-F316														

Maximum Allowable Working Pressure At Temperature
ASME B16.5 - Material Group 2.2

Deg.C	-29	38	50	100	150	200
kPa	1900	1900	1840	1620	1480	1370
Bar	19.0	19.0	18.4	16.2	14.8	13.7

Material : **Austenitic Stainless Steel**
Rating : **ASME Rating 150**
Service : **Refer to Class index**
Corrosion Allow. : **0.0 mm**
Design Code : **ASME B31.3**

PIPING CLASS **AS1**

Sheet 1 of 4

APPENDIX 07

Văn bản này được xác thực tại https://eoffice.vietsov.com.vn với số định danh: 627/25-CV-XDM/NIPI

Description	End Conn.	Sch./Rating	Standard	Nominal Diameter, in: 1/2	3/4	1	1.1/2	2	2.1/2	3	4	6	8	10	12	14	16	Notes
Flange - Weld Neck	BW	150# RF	ASME B16.5					ASTM A182-F316, Bore to match pipe										
Flange - Socket Weld	SW	150# RF	ASME B16.5	ASTM A182-F316														
Flange - Blind		150# RF	ASME B16.5	ASTM A182-F316														
Spectacle Blind		150# RF	ASME B16.48	ASTM A240-TP316														
Spade/ Spacer		150# RF	ASME B16.48												← ASTM A240-TP316			
Gasket SPWD		150# RF	ASME B16.20	Spiral Wound Gasket, 4,5mm thk., Graphite Fillter, SS outer ring & inner ring														
Stud bolts fully threaded			ASME B18.2.1/ B18.2.2	ASTM A193 Gr.B8M / A194 Gr.8M Sermagard Coated														

APPENDIX 07

Maximum Allowable Working Pressure At Temperature									
ASME B16.5 - Material Group 2.2									
Deg.C	-29	38	50	100	150	200			
kPa	1900	1900	1840	1620	1480	1370			
Bar	19.0	19.0	18.4	16.2	14.8	13.7			

Material :	**Austenitic Stainless Steel**
Rating :	**ASME Rating 150**
Service :	**Refer to Class index**
Corrosion Allow. :	**0.0 mm**
Design Code :	**ASME B31.3**

PIPING CLASS **AS1**

Văn bản này được xác thực tại https://eoffice.vietsov.com.vn với số định danh: 627/25-CV-XDM/NIPI

			Nominal Diameter, in	1/2	3/4	1	1.1/2	2	2.1/2	3	4	6	8	10	12	14	16	Notes
Valve Code	Valve Type	Description	Rating	End Conn.														
BA32ML	Ball	Full Bore	3000 Psi / 800#	SW ends.	Floating, Lever OP.													2
BA36ML	Valves	Full Bore		SW x NPTF	Floating, Lever OP.													2
BA31ML		Full Bore		NPTF ends.	Floating, Lever OP.													2
BAA4ML		Full Bore	150#	RF Flanged	Floating, Lever OP.													2
BAA4NL		Full Bore	150#	RF Flanged	Trunnion, Lever OP. →													2
BAA4NG		Full Bore	150#	RF Flanged	Trunnion, Gear OP.													2
BAA4OL		Reduced Bore	150#	RF Flanged	Floating, Lever OP.													2
BAA4PL		Reduced Bore	150#	RF Flanged	Trunnion, Lever OP. →													2
BAA4PG		Reduced Bore	150#	RF Flanged	Trunnion, Gear OP.													2
GL32DH	Globe		3000 Psi / 800#	SW ends.	← Rising Stem OS & Y, Handweel													2
GLA4DH	Valves		150#	RF Flanged	Rising Stem OS & Y, Handweel													2
GLA4DG			150#	RF Flanged	Rising Stem OS & Y, Gear OP													2
GA32DH	Gate	Solid Wedge	3000 Psi / 800#	SW ends.	← Rising Stem OS & Y, Handweel													2
GAA4DH	Valves	Solid Wedge	150#	RF Flanged	← Rising Stem OS & Y, Handweel													2
GAA4JH		Flexible Wedge	150#	RF Flanged	Rising Stem OS & Y, Handweel													2
GAA4JG		Flexible Wedge	150#	RF Flanged	Rising Stem OS & Y, Gear OP. →													2
CH32JN	Check	Piston	3000 Psi / 800#	SW ends.	Horizontal type													2
CHA4JN	Valves	Piston	150#	RF Flanged	Horizontal type													2
CHA4KN		Swing	150#	RF Flanged	Horizontal & Vertical type													2
CHA4LN		Wafer	150#	RF Wafer	Dual Plate Type													2
BUA4DL	Butterfly	Full Lug Type	150#	RF Wafer	Lever OP.													2
BUA4DG	Valves	Full Lug Type	150#	RF Wafer	Gear OP.													2
NV32DT	Needle		3000 Psi / 800#	SW ends.	Inside Screw, T-bar OP.													2
NV36DT	Valves			SW x NPTF	Inside Screw, T-bar OP.													2
NV31DT				NPTF ends.	Inside Screw, T-bar OP.													2
PLA4JL	Plug	Short-Pattern	150#	RF Flanged	Lever OP.													2
PLA4KG	Valves	Venturi-Pattern	150#	RF Flanged	Gear OP.													2
MVA9DT	Monoflange	Integral Body	150#	RF Flanged x	Single Block & Bleed, T-bar OP.													2
	Valves			NPTF ends.														

APPENDIX 07

Maximum Allowable Working Pressure At Temperature									
ASME B16.5 - Material Group 2.2									
Deg.C	-29	38	50	100	150	200			
kPa	1900	1900	1840	1620	1480	1370			
Bar	19.0	19.0	18.4	16.2	14.8	13.7			

Material :	**Austenitic Stainless Steel**
Rating :	**ASME Rating 150**
Service :	**Refer to Class index**
Corrosion Allow. :	**0.0 mm**
Design Code :	**ASME B31.3**

PIPING CLASS **AS1**

Văn bản này được xác thực tại https://eoffice.vietsov.com.vn với số định danh: 627/25-CV-XDM/NIPI

BRANCH CONNECTIONS

1 Equal Tee BW.
2 Reducing Tee BW.
3 Equal Tee SW.
4 Reducing Tee SW.
5 Weldolet
6 Sockolet

Nominal Diameter, in		BRANCH SIZE														Notes
	16	6	6	6	6	5	5	5	5	5	2	2	2	2	1	
H	14	6	6	6	6	5	5	5	5	5	2	2	2	1		
E	12	6	6	6	6	5	5	5	5	2	2	2	1			
A	10	6	6	6	6	5	5	5	2	2	2	1				
D	8	6	6	6	6	5	5	5	2	2	1					
E	6	6	6	6	6	5	2	2	2	1						
R	4	6	6	6	6	2	2	2	1							
	3	6	6	6	6	2	2	1								
S	2.1/2	6	6	6	6	2	1									
I	2	6	6	6	2	1										
Z	1.1/2	4	4	4	3											
E	1	4	4	3												
	3/4	4	3													
	1/2	3														

NOTES :

1. Screwed connections shall be NPT taper/ taper combination in accordance with ASME B1.20.1.
2. Refer to data sheet for Manual Valves: VSP-NIPI-TYP-TS-PI1-DS

APPENDIX 07

Maximum Allowable Working Pressure At Temperature									
ASME B16.5 - Material Group 2.2									
Deg.C	-29	38	50	100	150	200			
kPa	1900	1900	1840	1620	1480	1370			
Bar	19.0	19.0	18.4	16.2	14.8	13.7			

Material :	**Austenitic Stainless Steel**
Rating :	**ASME Rating 150**
Service :	**Refer to Class index**
Corrosion Allow. :	**0.0 mm**
Design Code :	**ASME B31.3**

PIPING CLASS **AS1**

Văn bản này được xác thực tại https://eoffice.vietsov.com.vn với số định danh: 627/25-CV-XDM/NIPI

| | Description | | End Conn. | Sch./Rating | Standard | | |

Nonimal Pipe Size, in	1/2	3/4	1	1 1/2	2	2 1/2	3	4	6	8	10	12	Notes

Description	End Conn.	Sch./Rating	Standard	
Flange - SW		150# FF	EEMUA 145 & ASME B16.5	PN20, Composite, Inner flange: UNS C70600, EEMUA 145 Outer flange: ASTM A105N Gavanised
Flange - Weld Neck	BW	150# FF	EEMUA 145 & ASME B16.5	PN20, Composite, Inner flange: UNS C70600, Outer flange: ASTM A105N Gavanised, WT to match pipe, EEMUA 145
Flange - Blind		150# FF	EEMUA 145	PN20, Composite, Inner flange: CuNi; Outer flange: ASTM A105N Gavanised
Spectacle Blind		150# FF	ASME B16.48	ASTM A516 Gr.70 Overlaid with 3mm thk. 90/10 Cu/Ni Weld Deposit
Spade/ Spacer		150# FF	ASME B16.48	ASTM A516 Gr.70 Overlaid with 3mm thk. 90/10 Cu/Ni Weld Deposit →
Gasket SPWD		150# FF	ASME B16.20	Gasket, 150#, FF, 2mm thick, Non Graphite CNAF to suit Flanges as per ASME B16.21
Stud bolts fully threaded with two hex Nuts			ASME B18.2.1/ B18.2.2	ASTM A193 Gr.B7/ A194 Gr.2H Sermagard Coated

APPENDIX 08

Maximum Allowable Working Pressure At Temperature EEMUA 145 - Appendix C									
Deg.C	38	50	75	100					
kPa	1600	1600	1600	1570					
Bar	16.0	16.0	16.0	15.7					

Material : **90/10 Copper Nickel**
Rating : **ASME Rating 150**
Service : **Refer to Class index**
Corrosion Allow. : **0 mm**
Design Code : **ASME B31.3**

PIPING CLASS **AB1**

Văn bản này được xác thực tại https://eoffice.vietsov.com.vn với số định danh: 627/25-CV-XDM/NIPI

			Nonimal Pipe Size, in		1/2	3/4	1	1 1/2	2	2 1/2	3	4	6	8	10	12	Notes
Valve Code	Valve Type	Description	Rating	End Conn.													
BA32QL	Ball	Full Bore	3000 Psi / 800#	SW ends.	Floating, Lever OP.												3
BA36QL	Valves	Full Bore		SW x NPTF	Floating, Lever OP.												3
BA31QL		Full Bore		NPTF ends.	Floating, Lever OP.												3
BAA3QL		Full Bore	150#	FF Flanged	Floating, Lever OP.												3
BAA3RL		Full Bore	150#	FF Flanged	Trunnion, Lever OP. →												3
BAA3RG		Full Bore	150#	FF Flanged										Trunnion, Gear OP.			3
BAA3SL		Reduced Bore	150#	FF Flanged	Floating, Lever OP.												3
BAA3TL		Reduced Bore	150#	FF Flanged	Trunnion, Lever OP. →												3
BAA3TG		Reduced Bore	150#	FF Flanged										Trunnion, Gear OP.			3
GL32EH	Globe		3000 Psi / 800#	SW ends.	Rising Stem OS & Y, Handweel												3
GLA3EH	Valves		150#	FF Flanged					Rising Stem OS & Y, Handweel								3
GLA3EG			150#	FF Flanged					Rising Stem OS & Y, Gear OP →								3
GA32EH	Gate	Solid Wedge	3000 Psi / 800#	SW ends.	Rising Stem OS & Y, Handweel												3
GAA3EH	Valves	Solid Wedge	150#	FF Flanged					← Rising Stem OS & Y, Handweel								3
GAA3KH		Flexible Wedge	150#	FF Flanged							Rising Stem OS & Y, Handweel						3
CH32MN	Check	Piston	3000 Psi / 800#	SW ends.	Horizontal type												3
CHA3MN	Valves	Piston	150#	FF Flanged	Horizontal type												3
CHA3NN		Swing	150#	FF Flanged					Horizontal & Vertical type								3
CHA3ON		Wafer	150#	FF Wafer					Horizontal & Vertical type								3
BUA3EL	Butterfly	Full Lug Type	150#	FF Wafer					Lever OP.								3
BUA3EG	Valves	Full Lug Type	150#	FF Wafer										Gear OP.			3
PLA3PL	Plug	Short-Pattern	150#	FF Flanged					Lever OP.								3
PLA3QG	Valves	Venturi-Pattern	150#	FF Flanged											Gear OP.		3

APPENDIX 08

Maximum Allowable Working Pressure At Temperature EEMUA 145 - Appendix C									
Deg.C	38	50	75	100					
kPa	1600	1600	1600	1570					
Bar	16.0	16.0	16.0	15.7					

Material :	**90/10 Copper Nickel**
Rating :	**ASME Rating 150**
Service :	**Refer to Class index**
Corrosion Allow. :	**0 mm**
Design Code :	**ASME B31.3**

PIPING CLASS **AB1**

Văn bản này được xác thực tại https://eoffice.vietsov.com.vn với số định danh: 627/25-CV-XDM/NIPI

BRANCH CONNECTIONS

1 Equal Tee BW.
2 Reducing Tee BW.
3 Equal Tee Brazed.
4 Reducing Tee Brazed.
5 Weldolet
6 Sockolet

	Outside Diameter, in	BRANCH SIZE 1/2	3/4	1	1.1/2	2	2.1/2	3	4	6	8	10	12	Notes
H	12	6	6	6	6	5	5	5	5	2	2	2	1	
E	10	6	6	6	6	5	5	5	2	2	2	1		
A	8	6	6	6	6	5	5	5	2	2	1			
D	6	6	6	6	6	5	2	2	2	1				
E	4	6	6	6	6	2	2	2	1					
R	3	6	6	6	6	2	2	1						
	2.1/2	6	6	6	6	2	1							
S	2	6	6	6	7	1								
I	1.1/2	4	4	4	3									
Z	1	4	4	3										
E	3/4	4	3											
	1/2	3												

NOTES :

1. The pipe wall thickness is selected accordance to "Specified thickness" in Table 1.2.1 & Table 1.2.2 in EEMUA 145.
2. Screwed connections shall be NPT taper/ taper combination in accordance with ASME B1.20.1.
3. Refer to data sheet for Manual Valves: VSP-NIPI-TYP-TS-PI1-DS

APPENDIX 08

Maximum Allowable Working Pressure At Temperature
EEMUA 145 - Appendix C

Deg.C	38	50	75	100					
kPa	1600	1600	1600	1570					
Bar	16.0	16.0	16.0	15.7					

Material :	**90/10 Copper Nickel**
Rating :	**ASME Rating 150**
Service :	**Refer to Class index**
Corrosion Allow. :	**0 mm**
Design Code :	**ASME B31.3**

PIPING CLASS **AB1**

Văn bản này được xác thực tại https://eoffice.vietsov.com.vn với số định danh: 627/25-CV-XDM/NIPI

| | | |

Description	End Conn.	Standard	Nominal Diameter, in: 1	1.1/2	2	3	4	6	8	10	12	14	16	18	20	24	Notes
Concentric Reducer	Quick-Lock Bell ends	Manu.'s Std.	← Filament Wound, Glass Fiber-reinforced Epoxy, adhesive joint, ASTM D2996														3
Concentric Reducer	Taper Bell ends	Manu.'s Std.	Filament Wound, Glass Fiber-reinforced Epoxy, adhesive joint, ASTM D2996														3
Eccentric Reducer	Quick-Lock Bell ends	Manu.'s Std.	← Filament Wound, Glass Fiber-reinforced Epoxy, adhesive joint, ASTM D2996														3
Eccentric Reducer	Taper Bell ends	Manu.'s Std.	Filament Wound, Glass Fiber-reinforced Epoxy, adhesive joint, ASTM D2996														3
Coupling	Quick-Lock Bell ends	Manu.'s Std.	← Filament Wound, Glass Fiber-reinforced Epoxy, adhesive joint, ASTM D2996														3
Coupling	Taper Bell ends	Manu.'s Std.	Filament Wound, Glass Fiber-reinforced Epoxy, adhesive joint, ASTM D2996														3
Adapter	Quick-Lock Spigot ends	Manu.'s Std.	← Filament Wound, Glass Fiber-reinforced Epoxy, adhesive joint, ASTM D2996														3
Adapter	Taper Spigot ends	Manu.'s Std.	Filament Wound, Glass Fiber-reinforced Epoxy, adhesive joint, ASTM D2996														3
Bushing Saddle	Bushing NPTF	ASME B16.11 & Manu.'s Std.	Filament Wound, Glass Fiber-reinforced Epoxy, adhesive joint, ASTM D2996 with Stainless Steel Threaded Bushing														3

Maximum Allowable Working Pressure At Temperature (Note 5)

Deg.F	14	100	122	185	199	250
Deg.C	-10	38	50	85	93	121
Psi	290	290	290	290	290	145
Bar	20	20	20	20	20	10

Material : **Glass Reinforced Epoxy**
Rating : **ASME Rating 150**
Service: **Refer to Class index**
Corrosion Allow. : **0 mm**
Design Code : **ASME B31.3**

PIPING CLASS **AG1**

APPENDIX 09

Văn bản này được xác thực tại https://eoffice.vietsov.com.vn với số định danh: 627/25-CV-XDM/NIPI

Description	End Conn.	Sch./ Rating	Standard	Nominal Diameter, in: 1	1.1/2	2	3	4	6	8	10	12	14	16	18	20	24	Notes
Elbow LR 90 Deg.	Flanged ends	150# FF	ASME B16.5	Filament Wound, Glass Fiber-reinforced Epoxy, adhesive joint, ASTM D2996														3
Elbow LR 45 Deg.	Flanged ends	150# FF	ASME B16.5	Filament Wound, Glass Fiber-reinforced Epoxy, adhesive joint, ASTM D2996														3
Elbow 30 Deg.	Flanged ends	150# FF	ASME B16.5	Filament Wound, Glass Fiber-reinforced Epoxy, adhesive joint, ASTM D2996														3
Elbow 22.5 Deg.	Flanged ends	150# FF	ASME B16.5	Filament Wound, Glass Fiber-reinforced Epoxy, adhesive joint, ASTM D2996														3
Elbow 11.25 Deg.	Flanged ends	150# FF	ASME B16.5	Filament Wound, Glass Fiber-reinforced Epoxy, adhesive joint, ASTM D2996														3
Equal Tee	Flanged ends	150# FF	ASME B16.5	Filament Wound, Glass Fiber-reinforced Epoxy, adhesive joint, ASTM D2996														3
Reducing Tee	Flanged ends	150# FF	ASME B16.5	Filament Wound, Glass Fiber-reinforced Epoxy, adhesive joint, ASTM D2996														3
Heavy Duty Flange	Quick-Lock Bell ends	150# FF	ASME B16.5	Filament Wound, Glass Fiber-reinforced Epoxy, adhesive joint, ASTM D2996														3
Heavy Duty Flange	Taper Bell	150# FF	ASME B16.5							Filament Wound, Glass Fiber-reinforced Epoxy, adhesive joint, ASTM D2996								3
Flange - Blind		150# FF	ASME B16.5	Filament Wound, Glass Fiber-reinforced Epoxy, ASTM D2996														3
Gasket Full Face		150# FF	ASME B16.21	Compressed Non-Asbestos Fiber Sheet, 3.0 mm thk.														3
Stud bolts fully threaded with two hex Nuts			ASME B18.2.1/ B18.2.2	ASTM A193 Gr.B7/ A194 Gr.2H Sermagard Coated														3

Maximum Allowable Working Pressure At Temperature (Note 5)

Deg.F	14	100	122	185	199	250
Deg.C	-10	38	50	85	93	121
Psi	290	290	290	290	290	145
Bar	20	20	20	20	20	10

Material : **Glass Reinforced Epoxy**
Rating : **ASME Rating 150**
Service: **Refer to Class index**
Corrosion Allow. : **0 mm**
Design Code : **ASME B31.3**

PIPING CLASS **AG1**

APPENDIX 09

Văn bản này được xác thực tại https://eoffice.vietsov.com.vn với số định danh: 627/25-CV-XDM/NIPI

			Nominal Diameter, in		1	1.1/2	2	3	4	6	8	10	12	14	16	18	20	24	Notes
Valve Code	Valve Type	Description	Rating	End Conn.															
BA32QL	Ball	Full Bore	3000 Psi	SW ends.	← Floating, Lever OP.														6
BA36QL	Valves	Full Bore	3000 Psi	SW x NPTF	← Floating, Lever OP.														6
BA31QL		Full Bore	3000 Psi	NPTF ends.	← Floating, Lever OP.														6
BAA3QL		Full Bore	150#	FF Flanged			Floating, Lever OP.												6
BAA3RL		Full Bore	150#	FF Flanged						← Trunnion, Lever OP.									6
BAA3RG		Full Bore	150#	FF Flanged							Trunnion, Gear OP.								6
BAA3SL		Reduced Bore	150#	FF Flanged			Floating, Lever OP.												6
BAA3TL		Reduced Bore	150#	FF Flanged						← Trunnion, Lever OP.									6
BAA3TG		Reduced Bore	150#	FF Flanged							Trunnion, Gear OP.								6
GL32EH	Globe		3000 Psi	SW ends.	← Rising Stem OS & Y, Handweel														6
GLA3EH	Valves		150#	FF Flanged							← Rising Stem OS & Y, Handweel								6
GLA3EG			150#	FF Flanged							Rising Stem OS & Y, Gear OP								6
GA32EH	Gate	Solid Wedge	3000 Psi	SW ends.	← Rising Stem OS & Y, Handweel														6
GAA3EH	Valves	Solid Wedge	150#	FF Flanged			← Rising Stem OS & Y, Handweel												6
GAA3KH		Flexible Wedge	150#	FF Flanged				Rising Stem OS & Y, Handweel											6
GAA3KG		Flexible Wedge	150#	FF Flanged				Rising Stem OS & Y, Handweel →											6
CH32MN	Check	Piston	3000 Psi	SW ends.	← Horizontal type														6
CHA3MN	Valves	Piston	150#	FF Flanged	← Horizontal type														6
CHA3NN		Swing	150#	FF Flanged			Horizontal & Vertical type												6
CHA3ON		Wafer	150#	FF Wafer			Dual Plate Type												6
BUA3EL	Butterfly	Full Lug Type	150#	FF Wafer			Lever OP.												6
BUA3EG	Valves	Full Lug Type	150#	FF Wafer							Gear OP.								6

APPENDIX 09

Maximum Allowable Working Pressure At Temperature (Note 5)						
Deg.F	14	100	122	185	199	250
Deg.C	-10	38	50	85	93	121
Psi	290	290	290	290	290	145
Bar	20	20	20	20	20	10

Material :	**Glass Reinforced Epoxy**
Rating :	**ASME Rating 150**
Service:	**Refer to Class index**
Corrosion Allow. :	**0 mm**
Design Code :	**ASME B31.3**

PIPING CLASS **AG1**

Văn bản này được xác thực tại https://eoffice.vietsov.com.vn với số định danh: 627/25-CV-XDM/NIPI

BRANCH CONNECTIONS

		Nominal Diameter, in	BRANCH SIZE														Notes
			1	1.1/2	2	3	4	6	8	10	12	14	16	18	20	24	
		24	6	6	6	6	6	6	7	4	4	4	4	4	4	3	
		20	6	6	6	6	6	6	7	4	4	4	4	4	3		
	H	18	6	6	6	6	6	6	4	4	4	4	4	3			
1	Equal Tee, Quick-Lock Bell	E 16	6	6	6	6	6	6	4	4	4	4	3				
2	Reducing Tee, Quick-Lock Bell	A 14	6	6	6	6	6	5	4	4	4	3					
3	Equal Tee, Taper Bell	D 12	6	6	6	6	6	5	4	4	3						
4	Reducing Tee, Taper Bell	E 10	6	6	6	6	5	5	4	3							
5	Reducing Tee, Taper Bell /	R 8	6	6	6	5	5	5	3								
	Quick-Lock Bell	6	6	6	2	2	2	1									
6	Saddle, Quick-Lock Bell	S 4	2	2	2	2	1										
7	Saddle,Taper Bell	I 3	2	2	2	1											
		Z 2	2	2	1												
		E 1.1/2	2	1													
		1	1														

NOTES :

1. An adhesive bonded for Quick-Lock joint and Taper/Taper joint is a rigid type of joining.
2. Pipe Wall thickness shall be confirmed by manufacturer.
3. The Pipe, fittings, accessories, flanges, and adhesive for GRE material shall be provided by the same manufacturer.
4. All Pipe Elbows shall be long radius type (1.5 ID).
5. Nominal Pressure (PN) for products, Maximum allowable design pressure - temperature shall be confirmed by manufacturer.
6. For instrument connection, hydrotest vents and small bore drains use bushing saddle with 3/4in NPTF stainless steel bushed outlet.
7. Valve for Vent, drain and instrument connection shall be used 90/10 Cu-Ni material unless noted otherwise.
8. Refer to data sheet for Manual Valves: VSP-NIPI-TYP-TS-PI1-DS

APPENDIX 09

Maximum Allowable Working Pressure At Temperature (Note 5)						
Deg.F	14	100	122	185	199	250
Deg.C	-10	38	50	85	93	121
Psi	290	290	290	290	290	145
Bar	20	20	20	20	20	10

Material :	**Glass Reinforced Epoxy**
Rating :	**ASME Rating 150**
Service:	**Refer to Class index**
Corrosion Allow. :	**0 mm**
Design Code :	**ASME B31.3**

PIPING CLASS **AG1**

Văn bản này được xác thực tại https://eoffice.vietsov.com.vn với số định danh: 627/25-CV-XDM/NIPI

																							Notes
Outside Diameter, mm																							
					16	20	25	32	40	50	63	75	90	110									
Nominal Pressure (PN), barg					20	20	20	20	20	20	20	20	20	20									
Wall Thickness (min), mm					2.7	3.4	4.2	5.4	6.7	8.3	10.5	12.5	15.0	18.3									1,2,3

Description	End Conn.	Rating	Dimension Standard		
Pipe Seamless	PE		Manu.'s Std.	PP-R (Polypropylene Random), SDR 6, SF=1.5, DIN 8077	1,2,3
Elbow 90 Deg.	SW	As pipe	Manu.'s Std.	PP-R (Polypropylene Random), SDR 6, DIN 16962	1,2,3
Elbow 45 Deg.	SW	As pipe	Manu.'s Std.	PP-R (Polypropylene Random), SDR 6, DIN 16962	1,2,3
Equal Tee	SW	As pipe	Manu.'s Std.	PP-R (Polypropylene Random), SDR 6, DIN 16962	1,2,3
Reducing Tee	SW	As pipe	Manu.'s Std.	PP-R (Polypropylene Random), SDR 6, DIN 16962	1,2,3
End Cap	SW	As pipe	Manu.'s Std.	PP-R (Polypropylene Random), SDR 6, DIN 16962	1,2,3
Eccentric Reducer	SW	As pipe	Manu.'s Std.	PP-R (Polypropylene Random), SDR 6, DIN 16962	1,2,3
Concentric Reducer	SW	As pipe	Manu.'s Std.	PP-R (Polypropylene Random), SDR 6, DIN 16962	1,2,3
Coupling - Full	SW	As pipe	Manu.'s Std.	PP-R (Polypropylene Random), SDR 6, DIN 16962	1,2,3
Saddle	SW	As pipe	Manu.'s Std.	PP-R (Polypropylene Random), SDR 6, DIN 16962	1,2,3

APPENDIX 10

Maximum Allowable Working Pressure for Pipe At Temperature								
DIN 8077 - Table 11: PP-R 80, SF = 1.5 (25 Years of Service)								
Deg.C	10	20	30	40	50	60	70	80
kPa	3110	2650	2230	1880	1590	1330	1010	640
Bar	31.1	26.5	22.3	18.8	15.9	13.3	10.1	6.4

Material :	**PP-R**
Rating :	**ASME Rating 150**
Service:	**Refer to Class index**
Corrosion Allow. :	**0 mm**
Design Code :	**ASME B31.3**

PIPING CLASS **AP1**

Văn bản này được xác thực tại https://eoffice.vietsov.com.vn với số định danh: 627/25-CV-XDM/NIPI

	Outside Diameter, mm	16	20	25	32	40	50	63	75	90	110	Notes
Description	End Conn.	Rating	Dimension Standard									
												1,2,3,4
Flange	SW	150# FF	Manu.'s Std.	PP-R (Polypropylene Random), Flat Face, ASME B16.5								1,2,3,4
Flange - Blind		150# FF	Manu.'s Std.	PP-R (Polypropylene Random), Flat Face, ASME B16.5								
Gasket		150# FF	ASME B16.21	Full Face, 3mm thk., NBR - Nitrile Butadiene Rubber								
Stud bolts fully threaded			ASME B18.2.1/ B18.2.2	ASTM A193 Gr.B7/ A194 Gr.2H Sermagard Coated								

Maximum Allowable Working Pressure for Pipe At Temperature

DIN 8077 - Table 11: PP-R 80, SF = 1.5 (25 Years of Service)

Deg.C	10	20	30	40	50	60	70	80
kPa	3110	2650	2230	1880	1590	1330	1010	640
Bar	31.1	26.5	22.3	18.8	15.9	13.3	10.1	6.4

Material : **PP-R**
Rating : **ASME Rating 150**
Service: **Refer to Class index**
Corrosion Allow. : **0 mm**
Design Code : **ASME B31.3**

PIPING CLASS **AP1**

APPENDIX 10

Văn bản này được xác thực tại https://eoffice.vietsov.com.vn với số định danh: 627/25-CV-XDM/NIPI

			Outside Diameter, mm		16	20	25	32	40	50	63	75	90	110	Notes
Valve Code	Valve Type	Description	Rating	End Conn.											
BAA2WL	Ball	Full Bore	150#	SW	Floating, Lever OP.										7
BAA3WL	Valves	Full Bore	150#	FF Flanged						Floating, Lever OP.					7
GLA2GH	Globe		150#	SW	Rising Stem OS & Y, Handweel										7
GLA3GH	Valves		150#	FF Flanged							← Rising Stem OS & Y, Handweel				7
GAA2MH	Gate	Solid Wedge	150#	SW	Floating, Lever OP.										7
GAA3MH	Valves	Solid Wedge	150#	FF Flanged							← Rising Stem OS & Y, Handweel				7
CHA2SN	Check	Swing	150#	SW	Horizontal & Vertical type										7
CHA3SN	Valves	Swing	150#	FF Flanged							Horizontal & Vertical type				7
BUA3FL	Butterfly Valves	Full Lug Type	150#	FF Wafer	Lever OP.										7

Maximum Allowable Working Pressure for Pipe At Temperature
DIN 8077 - Table 11: PP-R 80, SF = 1.5 (25 Years of Service)

Deg.C	10	20	30	40	50	60	70	80
kPa	3110	2650	2230	1880	1590	1330	1010	640
Bar	31.1	26.5	22.3	18.8	15.9	13.3	10.1	6.4

Material : **PP-R**
Rating : **ASME Rating 150**
Service: **Refer to Class index**
Corrosion Allow. : **0 mm**
Design Code : **ASME B31.3**

PIPING CLASS **AP1**

APPENDIX 10

Văn bản này được xác thực tại https://eoffice.vietsov.com.vn với số định danh: 627/25-CV-XDM/NIPI

BRANCH CONNECTIONS

1 Equal Tee, Socket weld.
2 Reducing Tee, Socket weld.
3 Reducing Saddle, Socket weld.

Nominal Diameter, in		BRANCH SIZE										Notes
		16	20	25	32	40	50	63	75	90	110	
H	110	3	3	3	3	2	2	2	2	2	1	
E	90	3	3	3	2	2	2	2	2	1		
A	75	3	3	3	2	2	2	2	1			
D	63	3	3	3	2	2	2	1				
E	50	3	3	3	2	2	1					
R	40	2	2	2	2	1						
S	32	2	2	2	1							
I	25	2	2	1								
Z	20	2	1									
E	16	1										

NOTES :

1. End connection of PPR Fittings, flanges are Socket weld..
2. The socket welding it is performed by snapping in the inside pipe the fitting, and both parts, achieve the temperature enough to fuse the material.
3. Pipe Wall thickness shall be confirmed by manufacturer.
4. The Pipe, fittings, flanges, and accessories for PPR material shall be provided by the same manufacturer.
5. For instrument connection, hydrotest vents and small bore drains use bushing saddle with 3/4in NPT 90/10 Cu-Ni bushed outlet.
6. Valve for Vent, drain and instrument connection shall be used 90/10 Cu-Ni material unless noted otherwise.
7. Refer to data sheet for Manual Valves: VSP-NIPI-TYP-TS-PI1-DS

APPENDIX 10

Maximum Allowable Working Pressure for Pipe At Temperature								
DIN 8077 - Table 11: PP-R 80, SF = 1.5 (25 Years of Service)								
Deg.C	10	20	30	40	50	60	70	80
kPa	3110	2650	2230	1880	1590	1330	1010	640
Bar	31.1	26.5	22.3	18.8	15.9	13.3	10.1	6.4

Material : **PP-R**
Rating : **ASME Rating 150**
Service: **Refer to Class index**
Corrosion Allow. : **0 mm**
Design Code : **ASME B31.3**

PIPING CLASS **AP1**

Văn bản này được xác thực tại https://eoffice.vietsov.com.vn với số định danh: 627/25-CV-XDM/NIPI

Nominal Diameter, in	1/2	3/4	1	1.1/2	2	2.1/2	3	4	6	Notes
Pipe Schedule (conform to IPS)	40	40	40	40	40	40	40	40	40	
Wall Thickness (min), mm	2.77	2.87	3.38	3.68	3.91	5.16	5.49	6.02	7.11	

Description	End Conn.	Rating	Dimension Standard		Notes
Pipe Seamless	PE	PN12	Manu.'s Std.	ASTM F441/ F441M	2,3
Elbow 90 Deg.	SE	PN12	Manu.'s Std.	ASTM F438	
Elbow 45 Deg.	SE	PN12	Manu.'s Std.	ASTM F438	
Equal Tee	SE	PN12	Manu.'s Std.	ASTM F438	
Reducing Tee	SE	PN12	Manu.'s Std.	ASTM F438	
End Cap	SE	PN12	Manu.'s Std.	ASTM F438	
Eccentric Reducer	SE	PN12	Manu.'s Std.	ASTM F438	
Concentric Reducer	SE	PN12	Manu.'s Std.	ASTM F438	
Coupling - Full	SE	PN12	Manu.'s Std.	ASTM F438	
Plug Hex Head	SE	PN12	Manu.'s Std.	ASTM F438	1
Saddle	SE	PN12	Manu.'s Std.	ASTM F438	
Female Adapter	SE x NPTF	PN12	Manu.'s Std.	ASTM F438	
Male Adapter	SE x NPTM	PN12	Manu.'s Std.	ASTM F438	

Maximum Allowable Working Pressure At Temperature

Deg.C	0	50	75	100
kPa	1200	1200	1200	1200
Bar	12	12	12	12

Material :	**CPVC**
Rating :	**ASME Rating 150**
Service:	**Refer to Class index**
Corrosion Allow. :	**0 mm**
Design Code :	**ASME B31.3**

PIPING CLASS **AP2**

APPENDIX 11

Văn bản này được xác thực tại https://eoffice.vietsov.com.vn với số định danh: 627/25-CV-XDM/NIPI

Description	End Conn.	Sch./Rating	Dimension Standard	Nominal Diameter, in: 1/2	3/4	1	1.1/2	2	2.1/2	3	4	6	Notes
Flange - Socket End	SE	150# FF	ASME B16.5	ASTM F438									
Flange - Blind		150# FF	ASME B16.5	ASTM F438									
Gasket Full Face		#150 FF	ASME B16.21	Compressed Non-Asbestos Fiber Sheet, 3.0 mm thk.									
Stud bolts fully threaded			ASME B18.2.1/ B18.2.2	ASTM A193 Gr.B7/ A194 Gr.2H Sermagard Coated									

APPENDIX 11

Maximum Allowable Working Pressure At Temperature										
Deg.C	0	50	75	100						
kPa	1200	1200	1200	1200						
Bar	12	12	12	12						

Material :	**CPVC**
Rating :	**ASME Rating 150**
Service:	**Refer to Class index**
Corrosion Allow. :	**0 mm**
Design Code :	**ASME B31.3**

PIPING CLASS **AP2**

Văn bản này được xác thực tại https://eoffice.vietsov.com.vn với số định danh: 627/25-CV-XDM/NIPI

			Nominal Diameter, in		1/2	3/4	1	1.1/2	2	2.1/2	3	4	6	Notes
Valve Code	Valve Type	Description	Rating	End Conn.										
BAA11YL	Ball	Full Bore	150#	SE	Floating, Lever OP.									6
BAA3YL	Valves	Full Bore	150#	FF Flanged							Floating, Lever OP.			6
GLA11HH	Globe		150#	SE	Rising Stem OS & Y, Handweel									6
GLA3HH	Valves		150#	FF Flanged									← Rising Stem OS & Y, Handweel	6
GAA11NH	Gate	Solid Wedge	150#	SE	Floating, Lever OP.									6
GAA3NH	Valves	Solid Wedge	150#	FF Flanged									← Rising Stem OS & Y, Handweel	6
CHA11TN	Check	Swing	150#	SE	Horizontal & Vertical type									6
CHA3TN	Valves	Swing	150#	FF Flanged									← Horizontal & Vertical type	6
BUA3GL	Butterfly Valves	Full Lug Type	150#	FF Wafer	Lever OP.									6

APPENDIX 11

Maximum Allowable Working Pressure At Temperature				
Deg.C	0	50	75	100
kPa	1200	1200	1200	1200
Bar	12	12	12	12

Material : **CPVC**
Rating : **ASME Rating 150**
Service: **Refer to Class index**
Corrosion Allow. : **0 mm**
Design Code : **ASME B31.3**

PIPING CLASS **AP2**

Văn bản này được xác thực tại https://eoffice.vietsov.com.vn với số định danh: 627/25-CV-XDM/NIPI

BRANCH CONNECTIONS

1	Equal Tee, Socket ends.
2	Reducing Tee, Socket ends.
3	Reducing Saddle, Socket ends.

	Nominal Diameter, in	BRANCH SIZE 1/2	3/4	1	1.1/2	2	2.1/2	3	4	6	Notes
D	6	3	3	3	2	2	2	2	2	1	
E	4	3	3	3	2	2	2	2	1		
R	3	3	3	3	2	2	2	1			
	2.1/2	3	3	3	2	2	1				
S	2	2	2	2	2	1					
I	1.1/2	2	2	2	1						
Z	1	2	2	1							
E	3/4	2	1								
	1/2	1									

NOTES :

1. End connection of CPVC Fittings, flanges are Socket ends.
2. Pipe Wall thickness shall be confirmed by manufacturer to comply with Nominal Pressure (PN) 12 barg.
3. The Pipe, fittings, flanges, and adhesive for CPVC material shall be provided by the same manufacturer.
4. For instrument connection, hydrotest vents and small bore drains use bushing saddle with 3/4in NPT 90/10 Cu-Ni bushed outlet.
5. Valve for Vent, drain and instrument connection shall be used 90/10 Cu-Ni material unless noted otherwise.
6. Refer to data sheet for Manual Valves: VSP-NIPI-TYP-TS-PI1-DS

APPENDIX 11

Maximum Allowable Working Pressure At Temperature										
Deg.C	0	50	75	100						
kPa	1200	1200	1200	1200						
Bar	12	12	12	12						

Material :	**CPVC**
Rating :	**ASME Rating 150**
Service:	**Refer to Class index**
Corrosion Allow. :	**0 mm**
Design Code :	**ASME B31.3**

PIPING CLASS **AP2**

Văn bản này được xác thực tại https://eoffice.vietsov.com.vn với số định danh: 627/25-CV-XDM/NIPI

Description	End Conn.	Sch./ Rating	Standard	Nominal Diameter, in	1/2	3/4	1	1.1/2	2	2.1/2	3	4	6	8	10	12	14	16	18	20	24	26	28	30	Notes
				ASME Schedule	160	160	160	160	80	80	80	80	40	40	40	40	40	40	XS	XS	40	-	-	-	
				Wall Thickness, mm	4.78	5.56	6.35	7.14	5.54	7.01	7.62	8.56	7.11	8.18	9.27	10.31	11.13	12.7	12.7	12.7	17.48	17.48	17.48	17.48	
Pipe Seamless	PE		ASME B36.10M		ASTM A106 Gr.B																				2
Pipe Seamless	BE		ASME B36.10M										ASTM A106 Gr.B												2
Pipe	BE		ASME B36.10M																API 5L Gr.B Welded (LSAW)						2,3
Elbow LR 90 Deg	BW	As Pipe	ASME B16.9										ASTM A234 Gr. WPB												
Elbow LR 45 Deg	BW	As Pipe	ASME B16.9										ASTM A234 Gr. WPB												
Elbow 90 Deg.	SW	6000#	ASME B16.11		ASTM A105N																				
Elbow 45 Deg.	SW	6000#	ASME B16.11		ASTM A105N																				
Equal Tee	BW	As Pipe	ASME B16.9										ASTM A234 Gr. WPB												
Reducing Tee	BW	As Pipe	ASME B16.9										ASTM A234 Gr. WPB												
Equal Tee	SW	6000#	ASME B16.11		ASTM A105N																				
Reducing Tee	SW	6000#	ASME B16.11		ASTM A105N																				
End Cap	BW	As Pipe	ASME B16.9										ASTM A234 Gr. WPB												
End Cap	SW	6000#	ASME B16.11		ASTM A105N																				
End Cap	THR'D	3000#	ASME B16.11		ASTM A105N																				1
Eccentric Reducer	BW	As Pipe	ASME B16.9										ASTM A234 Gr. WPB												
Concentric Reducer	BW	As Pipe	ASME B16.9										ASTM A234 Gr. WPB												
Concentric Swage	BLE/PSE	As Pipe	MSS SP-95		ASTM A105N																				
Eccentric Swage	BLE/PSE	As Pipe	MSS SP-95		ASTM A105N																				
Concentric Swage	PBE	As Pipe	MSS SP-95		ASTM A105N																				
Eccentric Swage	PBE	As Pipe	MSS SP-95		ASTM A105N																				
Coupling - Full	SW	6000#	ASME B16.11		ASTM A105N																				
Plug Hex Head	THR'D	3000#	ASME B16.11		ASTM A105N																				1
Nipple, 100mm length	PBE	As Pipe	ASME B36.10M		ASTM A106 Gr. B																				2
Nipple, 100mm length	TBE	As Pipe	ASME B36.10M		ASTM A106 Gr. B																				2
Weldolet	BW	As Pipe	MSS SP-97										ASTM A105N												
Sockolet	SW	6000#	MSS SP-97		ASTM A105N																				
Threadolet	THR'D	3000#	MSS SP-97		ASTM A105N																				1

Maximum Allowable Working Pressure At Temperature
ASME B16.5 & ASME B16.47 - Material Group 1.1

Deg.C	0	38	50	100	150	200			
kPa	5110	5110	5010	4660	4510	4380			
Bar	51.1	51.1	50.1	46.6	45.1	43.8			

Material : **Carbon Steel**
Rating : **ASME Rating 300**
Service: **Refer to Class index**
Corrosion Allow. : **3.0 mm**
Design Code : **ASME B31.3**

PIPING CLASS **BC1**

Sheet 1 of 4

APPENDIX 12

Văn bản này được xác thực tại https://eoffice.vietsov.com.vn với số định danh: 627/25-CV-XDM/NIPI

Description	End Conn.	Sch./ Rating	Standard	Nominal Diameter, in: 1/2	3/4	1	1.1/2	2	2.1/2	3	4	6	8	10	12	14	16	18	20	24	26	28	30	Notes
Flange - Weld Neck	BW	300# RF	ASME B16.5					ASTM A105N Bore to match pipe																
Flange - Weld Neck	BW	300# RF	ASME B16.47 Series A												ASTM A105N Bore to match pipe →									
Flange - Socket Weld	SW	300# RF	ASME B16.5	ASTM A105N																				
Flange - Blind		300# RF	ASME B16.5												ASTM A105N									
Flange - Blind		300# RF	ASME B16.47 Series A																	ASTM A105N Bore to match pipe →				
Spectacle Blind		300# RF	ASME B16.48												ASTM A516 Gr.70									
Spade/ Spacer		300# RF	ASME B16.48													ASTM A516 Gr.70								
Spade/ Spacer		300# RF	ASME B16.47 Series A																	ASTM A516 Gr.70 →				
Gasket SPWD		300# RF	ASME B16.20												Spiral Wound Gasket, 4,5mm thk., Graphite Fillter, SS outer ring & SS inner ring									
Stud bolts fully threaded			ASME B18.2.1/ B18.2.2												ASTM A193 Gr.B7/ A194 Gr.2H Sermagard Coated									

APPENDIX 12

Maximum Allowable Working Pressure At Temperature									
ASME B16.5 & ASME B16.47 - Material Group 1.1									
Deg.C	0	38	50	100	150	200			
kPa	5110	5110	5010	4660	4510	4380			
Bar	51.1	51.1	50.1	46.6	45.1	43.8			

Material :	**Carbon Steel**
Rating :	**ASME Rating 300**
Service:	**Refer to Class index**
Corrosion Allow. :	**3.0 mm**
Design Code :	**ASME B31.3**

PIPING CLASS **BC1**

Văn bản này được xác thực tại https://eoffice.vietsov.com.vn với số định danh: 627/25-CV-XDM/NIPI

			Nominal Diameter, DN		1/2	3/4	1	1.1/2	2	2.1/2	3	4	6	8	10	12	14	16	18	20	24	26	28	30	Notes
Valve Code	Valve Type	Description	Rating	End Conn.																				
BA32AL	Ball	Full Bore	3000 Psi / 800#	SW ends.	Floating, Lever OP.																			4
BA36AL	Valves	Full Bore		SW x NPTF	Floating, Lever OP.																			4
BA31AL		Full Bore		NPTF ends.	Floating, Lever OP.																			4
BAB4AL		Full Bore	300#	RF Flanged	Floating, Lever OP.																			4
BAB4BL		Full Bore	300#	RF Flanged	Trunnion, Lever OP. →																			4
BAB4BG		Full Bore	300#	RF Flanged	Trunnion, Gear OP.																			4
BAB4CL		Reduced Bore	300#	RF Flanged	Floating, Lever OP.																			4
BAB4DL		Reduced Bore	300#	RF Flanged	Trunnion, Lever OP. →																			4
BAB4DG		Reduced Bore	300#	RF Flanged	Trunnion, Gear OP.																			4
GL32AH	Globe		3000 Psi / 800#	SW ends.	Rising Stem OS & Y, Handweel																			4
GLB4AH	Valves		300#	RF Flanged					Rising Stem OS & Y, Handweel															4
GLB4AG			300#	RF Flanged										Rising Stem OS & Y, Gear OP										4
GA32AH	Gate	Solid Wedge	3000 Psi / 800#	SW ends.	Rising Stem OS & Y, Handweel																			4
GAB4AH	Valves	Solid Wedge	300#	RF Flanged					← Rising Stem OS & Y, Handweel															4
GAB4GH		Flexible Wedge	300#	RF Flanged	Rising Stem OS & Y, Handweel →																			4
GAB4GG		Flexible Wedge	300#	RF Flanged												Rising Stem OS & Y, Gear OP.								4
CH32AN	Check	Piston	3000 Psi / 800#	SW ends.	Horizontal type																			4
CHB4AN	Valves	Piston	300#	RF Flanged	Horizontal type																			4
CHB4BN		Swing	300#	RF Flanged										Horizontal & Vertical type										4
CHB4CN		Wafer	300#	RF Wafer										Horizontal & Vertical type										4
BUB4AL	Butterfly	Full Lug Type	300#	RF Wafer						Lever OP.														4
BUB4AG	Valves	Full Lug Type	300#	RF Wafer												Gear OP.								4
NV32AT	Needle		3000 Psi / 800#	SW ends.	Inside Screw, T-bar OP.																			4
NV36AT	Valves			SW x NPTF	Inside Screw, T-bar OP.																			4
NV31AT				NPTF ends.	Inside Screw, T-bar OP.																			4
PLB4AL	Plug	Short-Pattern	300#	RF Flanged						Lever OP.														4
PLB4BG	Valves	Venturi-Pattern	300#	RF Flanged												Gear OP.								4
MVB9AT	Monoflange	Integral Body	300#	RF Flanged x	Single Block & Bleed, T-bar OP.																			4
	Valves			NPTF ends.																				

APPENDIX 12

Maximum Allowable Working Pressure At Temperature									
ASME B16.5 & ASME B16.47 - Material Group 1.1									
Deg.C	0	38	50	100	150	200			
kPa	5110	5110	5010	4660	4510	4380			
Bar	51.1	51.1	50.1	46.6	45.1	43.8			

Material : **Carbon Steel**
Rating : **ASME Rating 300**
Service: **Refer to Class index**
Corrosion Allow. : **3.0 mm**
Design Code : **ASME B31.3**

PIPING CLASS **BC1**

Văn bản này được xác thực tại https://eoffice.vietsov.com.vn với số định danh: 627/25-CV-XDM/NIPI

BRANCH CONNECTIONS

1 Equal Tee BW.
2 Reducing Tee BW.
3 Equal Tee SW.
4 Reducing Tee SW.
5 Weldolet
6 Sockolet

Nominal Diameter, in		BRANCH SIZE																				Notes
		1/2	3/4	1	1.1/2	2	2.1/2	3	4	6	8	10	12	14	16	18	20	24	26	28	30	
	30	6	6	6	6	2	5	5	5	5	5	5	5	2	2	2	2	2	2	2	1	
	28	6	6	6	6	3	5	5	5	5	5	5	5	2	2	2	2	2	2	1		
	26	6	6	6	6	4	5	5	5	5	5	5	2	2	2	2	2	2	1			
	24	6	6	6	6	5	5	5	5	5	5	5	2	2	2	2	2	1				
H	20	6	6	6	6	5	5	5	5	5	5	2	2	2	2	2	1					
E	18	6	6	6	6	5	5	5	5	5	5	2	2	2	2	1						
A	16	6	6	6	6	5	5	5	5	5	2	2	2	2	1							
D	14	6	6	6	6	5	5	5	5	5	2	2	2	1								
E	12	6	6	6	6	5	5	5	5	2	2	2	1									
R	10	6	6	6	6	5	5	5	2	2	2	1										
	8	6	6	6	6	5	5	5	2	2	1											
S	6	6	6	6	6	5	2	2	2	1												
I	4	6	6	6	6	2	2	2	1													
Z	3	6	6	6	6	2	2	1														
E	2.1/2	6	6	6	6	2	1															
	2	6	6	6	2	1																
	1.1/2	4	4	4	3																	
	1	4	4	3																		
	3/4	4	3																			
	1/2	3																				

NOTES :

1. Screwed connections shall be NPT taper/ taper combination in accordance with ASME B1.20.1.
2. Pipe API 5L Gr. B seamless is an acceptable substitute for ASTM A106 Gr. B where specified.
3. Welded pipe type shall be longitudinal SAW, 100% Radiographed, Quality factors = 1 (refer to ASME B31.3 - Table A-1B)
4. Refer to data sheet for Manual Valves: VSP-NIPI-TYP-TS-PI1-DS

APPENDIX 12

Maximum Allowable Working Pressure At Temperature									
ASME B16.5 & ASME B16.47 - Material Group 1.1									
Deg.C	0	38	50	100	150	200			
kPa	5110	5110	5010	4660	4510	4380			
Bar	51.1	51.1	50.1	46.6	45.1	43.8			

Material :	**Carbon Steel**
Rating :	**ASME Rating 300**
Service:	**Refer to Class index**
Corrosion Allow. :	**3.0 mm**
Design Code :	**ASME B31.3**

PIPING CLASS **BC1**

Văn bản này được xác thực tại https://eoffice.vietsov.com.vn với số định danh: 627/25-CV-XDM/NIPI

Description		End Conn.	Sch./Rating	Standard	Nominal Diameter, in	1/2	3/4	1	1.1/2	2	2.1/2	3	4	6	8	10	12	14	16	Notes
					ASME Schedule	160	160	160	160	80	80	80	40	40	40	40	STD	STD	STD	
					Wall Thickness, mm	4.78	5.56	6.35	7.14	5.54	7.01	7.62	6.02	7.11	8.18	9.27	6.35	7.92	7.92	
Pipe	Seamless	NPTM		ASME B36.10M		ASTM A106 Gr.B Galv.														1
Pipe	Seamless	BE		ASME B36.10M						ASTM A106 Gr.B Galv.										
Elbow	LR 90 Deg.	BW	As Pipe	ASME B16.9						ASTM A234 Gr. WPB Galv.										
Elbow	LR 45 Deg.	BW	As Pipe	ASME B16.9						ASTM A234 Gr. WPB Galv.										
Elbow	90 Deg.	SW	6000#	ASME B16.11		ASTM A105N Galv.														
Elbow	45 Deg.	SW	6000#	ASME B16.11		ASTM A105N Galv.														
Equal Tee		BW	As Pipe	ASME B16.9						ASTM A234 Gr. WPB Galv.										
Reducing Tee		BW	As Pipe	ASME B16.9						ASTM A234 Gr. WPB Galv.										
Equal Tee		SW	6000#	ASME B16.11		ASTM A105N Galv.														
Reducing Tee		SW	6000#	ASME B16.11		ASTM A105N Galv.														
End Cap		BW	As Pipe	ASME B16.9						ASTM A234 Gr. WPB Galv.										
End Cap		SW	6000#	ASME B16.11		ASTM A105N Galv.														
End Cap		THR'D	3000#	ASME B16.11		ASTM A105N Galv.														
Eccentric Reducer		BW	As Pipe	ASME B16.9						ASTM A234 Gr. WPB Galv.										
Concentric Reducer		BW	As Pipe	ASME B16.9						ASTM A234 Gr. WPB Galv.										
Concentric Swage		BLE/PSE	As Pipe	MSS SP-95		ASTM A105N Galv.														
Eccentric Swage		BLE/PSE	As Pipe	MSS SP-95		ASTM A105N Galv.														
Concentric Swage		PBE	As Pipe	MSS SP-95		ASTM A105N Galv.														
Eccentric Swage		PBE	As Pipe	MSS SP-95		ASTM A105N Galv.														
Coupling - Full		SW	6000#	ASME B16.11		ASTM A105N Galv.														
Plug Hex Head		THR'D	3000#	ASME B16.11		ASTM A105N Galv.														1
Nipple, 100mm length		PBE	As Pipe	ASME B36.10M		ASTM A106 Gr. B Galv.														
Nipple, 100mm length		TBE	As Pipe	ASME B36.10M		ASTM A106 Gr. B Galv.														
Weldolet		BW	As Pipe	MSS SP-97						ASTM A105N Galv.										
Sockolet		SW	6000#	MSS SP-97		ASTM A105N Galv.														
Threadolet		THR'D	3000#	MSS SP-97		ASTM A105N Galv.														

APPENDIX 13

Maximum Allowable Working Pressure At Temperature										
ASME B16.5 - Material Group 1.1										
Deg.C	0	38	50	100	150	200				
kPa	5110	5110	5010	4660	4510	4380				
Bar	51.1	51.1	50.1	46.6	45.1	43.8				

Material :	**C.S. Galvanised**
Rating :	**ASME Rating 300**
Service:	**Refer to Class index**
Corrosion Allow. :	**1.6 mm**
Design Code :	**ASME B31.3**

PIPING CLASS **BC2**

Văn bản này được xác thực tại https://eoffice.vietsov.com.vn với số định danh: 627/25-CV-XDM/NIPI

Description	End Conn.	Sch./Rating	Standard	Nominal Diameter, in: 1/2	3/4	1	1.1/2	2	2.1/2	3	4	6	8	10	12	14	16	Notes
Flange - Weld Neck	BW	300# RF	ASME B16.5					ASTM A105N Galv., Bore to match pipe										
Flange - Weld Neck	BW	300# RF	JIS B2220					ASTM A105N Galv., Bore to match pipe										
Flange - Socket Weld	SW	300# RF	ASME B16.5	ASTM A105N Galv.														
Flange - Blind		300# RF	ASME B16.5	ASTM A105N Galv.														
Spectacle Blind		300# RF	ASME B16.48	ASTM A516 Gr.70 Galv.														
Spade/ Spacer		300# RF	ASME B16.48	← ASTM A516 Gr.70 Galv.														
Gasket SPWD		300# RF	ASME B16.20	Spiral Wound Gasket, 4,5mm thk., Graphite Fillter, SS outer ring & SS inner ring														
Stud bolts fully threaded			ASME B18.2.1/ B18.2.2	ASTM A193 Gr.B7/ A194 Gr.2H Sermagard Coated														

APPENDIX 13

Maximum Allowable Working Pressure At Temperature									
ASME B16.5 - Material Group 1.1									
Deg.C	0	38	50	100	150	200			
kPa	5110	5110	5010	4660	4510	4380			
Bar	51.1	51.1	50.1	46.6	45.1	43.8			

Material :	**C.S. Galvanised**
Rating :	**ASME Rating 300**
Service:	**Refer to Class index**
Corrosion Allow. :	**1.6 mm**
Design Code :	**ASME B31.3**

PIPING CLASS **BC2**

Văn bản này được xác thực tại https://eoffice.vietsov.com.vn với số định danh: 627/25-CV-XDM/NIPI

			Nominal Diameter, in		1/2	3/4	1	1.1/2	2	2.1/2	3	4	6	8	10	12	14	16	Notes
Valve Code	Valve Type	Description	Rating	End Conn.															
BA32EL	Ball	Full Bore	3000 Psi / 800#	SW ends.	Floating, Lever OP.														3
BA36EL	Valves	Full Bore		SW x NPTF	Floating, Lever OP.														3
BA31EL		Full Bore		NPTF ends.	Floating, Lever OP.														3
BAB4EL		Full Bore	300#	RF Flanged	Floating, Lever OP.														3
BAB4FL		Full Bore	300#	RF Flanged	Trunnion, Lever OP. →														3
BAB4FG		Full Bore	300#	RF Flanged										Trunnion, Gear OP.					3
BAB4GL		Reduced Bore	300#	RF Flanged	Floating, Lever OP.														3
BAB4HL		Reduced Bore	300#	RF Flanged	Trunnion, Lever OP. →														3
BAB4HG		Reduced Bore	300#	RF Flanged										Trunnion, Gear OP.					3
GL32BH	Globe		3000 Psi / 800#	SW ends.	← Rising Stem OS & Y, Handweel														3
GLB4BH	Valves		300#	RF Flanged	Rising Stem OS & Y, Handweel														3
GLB4BG			300#	RF Flanged										Rising Stem OS & Y, Gear OP					3
GA32BH	Gate	Solid Wedge	3000 Psi / 800#	SW ends.	← Rising Stem OS & Y, Handweel														3
GAB4BH	Valves	Solid Wedge	300#	RF Flanged	← Rising Stem OS & Y, Handweel														3
GAB4HH		Flexible Wedge	300#	RF Flanged	Rising Stem OS & Y, Handweel →														3
GAB4HG		Flexible Wedge	300#	RF Flanged	Rising Stem OS & Y, Gear OP. →														3
CH32DN	Check	Piston	3000 Psi / 800#	SW ends.	Horizontal type														3
CHB4DN	Valves	Piston	300#	RF Flanged	Horizontal type														3
CHB4EN		Swing	300#	RF Flanged					Horizontal & Vertical type										3
CHB4FN		Wafer	300#	RF Wafer					Dual Plate Type										3
BUB4BL	Butterfly	Full Lug Type	300#	RF Wafer					Lever OP.										3
BUB4BG	Valves		300#	RF Flanged										Gear OP.					3
NV32BT	Needle		3000 Psi / 800#	SW ends.	Inside Screw, T-bar OP.														3
NV36BT	Valves			SW x NPTF	Inside Screw, T-bar OP.														3
NV31BT				NPTF ends.	Inside Screw, T-bar OP.														3
PLB4DL	Plug	Short-Pattern	300#	RF Flanged					Lever OP.										3
PLB4EG	Valves	Venturi-Pattern	300#	RF Flanged										Gear OP.					3
MVB9BT	Monoflange	Integral Body	300#	RF Flanged x	Single Block & Bleed, T-bar OP.														3
	Valves			NPTF ends.															

APPENDIX 13

Maximum Allowable Working Pressure At Temperature									
ASME B16.5 - Material Group 1.1									
Deg.C	0	38	50	100	150	200			
kPa	5110	5110	5010	4660	4510	4380			
Bar	51.1	51.1	50.1	46.6	45.1	43.8			

Material :	**C.S. Galvanised**
Rating :	**ASME Rating 300**
Service:	**Refer to Class index**
Corrosion Allow. :	**1.6 mm**
Design Code :	**ASME B31.3**

PIPING CLASS **BC2**

Văn bản này được xác thực tại https://eoffice.vietsov.com.vn với số định danh: 627/25-CV-XDM/NIPI

BRANCH CONNECTIONS

1 Equal Tee BW.
2 Reducing Tee BW.
3 Equal Tee SW.
4 Reducing Tee SW.
5 Weldolet
6 Sockolet

Nominal Diameter, in		BRANCH SIZE 1/2	3/4	1	1.1/2	2	2.1/2	3	4	6	8	10	12	14	16	Notes
16		6	6	6	6	5	5	5	5	5	2	2	2	2	1	
14	H	6	6	6	6	5	5	5	5	5	2	2	2	1		
12	E	6	6	6	6	5	5	5	5	2	2	2	1			
10	A	6	6	6	6	5	5	5	2	2	2	1				
8	D	6	6	6	6	5	5	5	2	2	1					
6	E	6	6	6	6	5	2	2	2	1						
4	R	6	6	6	6	2	2	2	1							
3		6	6	6	6	2	2	1								
2.1/2	S	6	6	6	6	2	1									
2	I	6	6	6	2	1										
1.1/2	Z	4	4	4	3											
1	E	4	4	3												
3/4		4	3													
1/2		3														

NOTES :

1. Screwed connections shall be NPT taper/ taper combination in accordance with ASME B1.20.1.
2. Pipe API 5L Gr. B seamless is an acceptable substitute for ASTM A106 Gr. B where specified.
3. Refer to data sheet for Manual Valves: VSP-NIPI-TYP-TS-PI1-DS

Maximum Allowable Working Pressure At Temperature
ASME B16.5 - Material Group 1.1

Deg.C	0	38	50	100	150	200
kPa	5110	5110	5010	4660	4510	4380
Bar	51.1	51.1	50.1	46.6	45.1	43.8

Material : **C.S. Galvanised**
Rating : **ASME Rating 300**
Service: **Refer to Class index**
Corrosion Allow. : **1.6 mm**
Design Code : **ASME B31.3**

PIPING CLASS **BC2**

Sheet 4 of 4

APPENDIX 13

Văn bản này được xác thực tại https://eoffice.vietsov.com.vn với số định danh: 627/25-CV-XDM/NIPI

	Nominal Diameter, in	1/2	3/4	1	1.1/2	2	2.1/2	3	4	6	8	10	12	14	16	Notes
	ASME Schedule	80S	80S	80S	80S	40S	40S	40S	40S	10S	10S	10S	20	20	20	
	Wall Thickness, mm	3.73	3.91	4.55	5.08	3.91	5.16	5.49	6.02	3.4	3.76	4.19	6.35	7.92	7.92	

Description	End Conn.	Sch./Rating	Standard													
Pipe Seamless	PE		ASME B36.19M	ASTM A312 Gr.TP316												
Pipe Seamless	BE		ASME B36.19M							ASTM A312 Gr.TP316						
Elbow LR 90 Deg.	BW	As Pipe	ASME B16.9							ASTM A403-WP316						
Elbow LR 45 Deg.	BW	As Pipe	ASME B16.9							ASTM A403-WP316						
Elbow 90 Deg.	SW	3000#	ASME B16.11	ASTM A182-F316												
Elbow 45 Deg.	SW	3000#	ASME B16.11	ASTM A182-F316												
Equal Tee	BW	As Pipe	ASME B16.9							ASTM A403-WP316						
Reducing Tee	BW	As Pipe	ASME B16.9							ASTM A403-WP316						
Equal Tee	SW	3000#	ASME B16.11	ASTM A182-F316												
Reducing Tee	SW	3000#	ASME B16.11	ASTM A182-F316												
End Cap	BW	As Pipe	ASME B16.9							ASTM A403-WP316						
End Cap	SW	3000#	ASME B16.11	ASTM A182-F316												
End Cap	THR'D	3000#	ASME B16.11	ASTM A182-F316												
Eccentric Reducer	BW	As Pipe	ASME B16.9							ASTM A403-WP316						
Concentric Reducer	BW	As Pipe	ASME B16.9							ASTM A403-WP316						
Concentric Swage	BLE/PSE	As Pipe	MSS SP-95	ASTM A182-F316												
Eccentric Swage	BLE/PSE	As Pipe	MSS SP-95	ASTM A182-F316												
Concentric Swage	PBE	As Pipe	MSS SP-95	ASTM A182-F316												
Eccentric Swage	PBE	As Pipe	MSS SP-95	ASTM A182-F316												
Coupling - Full	SW	3000#	ASME B16.11	ASTM A182-F316												
Plug Hex Head	THR'D	3000#	ASME B16.11	ASTM A182-F316												1
Nipple, 100mm length	PBE	As Pipe	ASME B36.19M	ASTM A312 Gr.TP316												
Nipple, 100mm length	TBE	As Pipe	ASME B36.19M	ASTM A312 Gr.TP316												
Weldolet	BW	As Pipe	MSS SP-97							ASTM A182-F316						
Sockolet	SW	3000#	MSS SP-97	ASTM A182-F316												
Threadolet	THR'D	3000#	MSS SP-97	ASTM A182-F316												

APPENDIX 14

Maximum Allowable Working Pressure At Temperature										
ASME B16.5 - Material Group 2.2										
Deg.C	0	38	50	100	150	200				
kPa	4960	4960	4810	4220	3850	3570				
Bar	49.6	49.6	48.1	42.2	38.5	35.7				

Material :	**Austenitic Stainless Steel**
Rating :	**ASME Rating 300**
Service :	**Refer to Class index**
Corrosion Allow. :	**0 mm**
Design Code :	**ASME B31.3**

PIPING CLASS **BS1**

Văn bản này được xác thực tại https://eoffice.vietsov.com.vn với số định danh: 627/25-CV-XDM/NIPI

Description	End Conn.	Sch./Rating	Standard	Nominal Diameter, in: 1/2	3/4	1	1.1/2	2	2.1/2	3	4	6	8	10	12	14	16	Notes
Flange - Weld Neck	BW	300# RF	ASME B16.5	ASTM A182-F316, Bore to match pipe														
Flange - Socket Weld	SW	300# RF	ASME B16.5	ASTM A182-F316														
Flange - Blind		300# RF	ASME B16.5	ASTM A182-F316														
Spectacle Blind		300# RF	ASME B16.48	ASTM A240-TP316														
Spade/ Spacer		300# RF	ASME B16.48	ASTM A240-TP316														
Gasket SPWD		300# RF	ASME B16.20	Spiral Wound Gasket, 4,5mm thk., Graphite Fillter, SS outer ring & inner ring														
Stud bolts fully threaded			ASME B18.2.1/ B18.2.2	ASTM A193 Gr.B8M/ A194 Gr.8M Sermagard Coated														

APPENDIX 14

Maximum Allowable Working Pressure At Temperature										
ASME B16.5 - Material Group 2.2										
Deg.C	0	38	50	100	150	200				
kPa	4960	4960	4810	4220	3850	3570				
Bar	49.6	49.6	48.1	42.2	38.5	35.7				

Material : **Austenitic Stainless Steel**
Rating : **ASME Rating 300**
Service : **Refer to Class index**
Corrosion Allow. : **0 mm**
Design Code : **ASME B31.3**

PIPING CLASS **BS1**

Văn bản này được xác thực tại https://eoffice.vietsov.com.vn với số định danh: 627/25-CV-XDM/NIPI

Valve Code	Valve Type	Description	Rating	End Conn.	Nominal Diameter, in: 1/2	3/4	1	1.1/2	2	2.1/2	3	4	6	8	10	12	14	16	Notes
BA32ML	Ball Valves	Full Bore	3000 Psi / 800#	SW ends.	Floating, Lever OP.														2
BA36ML		Full Bore		SW x NPTF	Floating, Lever OP.														2
BA31ML		Full Bore		NPTF ends.	Floating, Lever OP.														2
BAB4ML		Full Bore	300#	RF Flanged	Floating, Lever OP.														2
BAB4NL		Full Bore	300#	RF Flanged	Trunnion, Lever OP. →														2
BAB4NG		Full Bore	300#	RF Flanged										Trunnion, Gear OP.					2
BAB4OL		Reduced Bore	300#	RF Flanged	Floating, Lever OP.														2
BAB4PL		Reduced Bore	300#	RF Flanged	Trunnion, Lever OP. →														2
BAB4PG		Reduced Bore	300#	RF Flanged										Trunnion, Gear OP.					2
GL32DH	Globe Valves		3000 Psi / 800#	SW ends.	← Rising Stem OS & Y, Handweel														2
GLB4DH			300#	RF Flanged	Rising Stem OS & Y, Handweel														2
GLB4DG			300#	RF Flanged										Rising Stem OS & Y, Gear OP					2
GA32DH	Gate Valves	Solid Wedge	3000 Psi / 800#	SW ends.	← Rising Stem OS & Y, Handweel														2
GAB4DH		Solid Wedge	300#	RF Flanged	← Rising Stem OS & Y, Handweel														2
GAA4JH		Flexible Wedge	300#	RF Flanged	Rising Stem OS & Y, Handweel →														2
GAA4JG		Flexible Wedge	300#	RF Flanged	Rising Stem OS & Y, Gear OP. →														2
CH32JN	Check Valve	Piston	3000 Psi / 800#	SW ends.	Horizontal type														2
CHB4JN		Piston	300#	RF Flanged	Horizontal type														2
CHB4KN		Swing	300#	RF Flanged					Horizontal & Vertical type										2
CHB4LN		Wafer	300#	RF Wafer					Dual Plate Type										2
BUB4DL	Butterfly Valves	Full Lug Type	300#	RF Wafer					Lever OP.										2
BUB4DG			300#	RF Flanged										Gear OP.					2
NV32DT	Needle Valves		3000 Psi / 800#	SW ends.	Inside Screw, T-bar OP.														2
NV36DT				SW x NPTF	Inside Screw, T-bar OP.														2
NV31DT				NPTF ends.	Inside Screw, T-bar OP.														2
PLB4JL	Plug Valves	Short-Pattern	300#	RF Flanged					Lever OP.										2
PLB4KG		Venturi-Pattern	300#	RF Flanged										Gear OP.					2
MVB9DT	Monoflange Valves	Integral Body	300#	RF Flanged x NPTF ends.	Single Block & Bleed, T-bar OP.														2

Maximum Allowable Working Pressure At Temperature

ASME B16.5 - Material Group 2.2

Deg.C	0	38	50	100	150	200
kPa	4960	4960	4810	4220	3850	3570
Bar	49.6	49.6	48.1	42.2	38.5	35.7

Material : **Austenitic Stainless Steel**
Rating : **ASME Rating 300**
Service : **Refer to Class index**
Corrosion Allow. : **0 mm**
Design Code : **ASME B31.3**

PIPING CLASS **BS1**

APPENDIX 14

Văn bản này được xác thực tại https://eoffice.vietsov.com.vn với số định danh: 627/25-CV-XDM/NIPI

BRANCH CONNECTIONS

1 Equal Tee BW.
2 Reducing Tee BW.
3 Equal Tee SW.
4 Reducing Tee SW.
5 Weldolet
6 Sockolet

Nominal Diameter, in		BRANCH SIZE 1/2	3/4	1	1.1/2	2	2.1/2	3	4	6	8	10	12	14	16	Notes
16		6	6	6	6	5	5	5	5	5	2	2	2	2	1	
14	H	6	6	6	6	5	5	5	5	5	2	2	2	1		
12	E	6	6	6	6	5	5	5	5	2	2	2	1			
10	A	6	6	6	6	5	5	5	2	2	2	1				
8	D	6	6	6	6	5	5	5	2	2	1					
6	E	6	6	6	6	5	2	2	2	1						
4	R	6	6	6	6	2	2	2	1							
3		6	6	6	6	2	2	1								
2.1/2	S	6	6	6	6	2	1									
2	I	6	6	6	2	1										
1.1/2	Z	4	4	4	3											
1	E	4	4	3												
3/4		4	3													
1/2		3														

NOTES :

1. Screwed connections shall be NPT taper/ taper combination in accordance with ASME B1.20.1.
2. Refer to data sheet for Manual Valves: VSP-NIPI-TYP-TS-PI1-DS

APPENDIX 14

Maximum Allowable Working Pressure At Temperature ASME B16.5 - Material Group 2.2									
Deg.C	0	38	50	100	150	200			
kPa	4960	4960	4810	4220	3850	3570			
Bar	49.6	49.6	48.1	42.2	38.5	35.7			

Material : **Austenitic Stainless Steel**
Rating : **ASME Rating 300**
Service : **Refer to Class index**
Corrosion Allow. : **0 mm**
Design Code : **ASME B31.3**

PIPING CLASS **BS1**

Văn bản này được xác thực tại https://eoffice.vietsov.com.vn với số định danh: 627/25-CV-XDM/NIPI

			Nominal Diameter, in	1	1.1/2	2	3	4	6	8	10	12	14	16	18	20	24							Notes
			Inside Diameter, mm	27.1	42.1	53.0	81.8	105.2	159.0	208.8	262.9	313.7	337.6	385.8	433.8	482.1	578.6							1,2
			Min. Wall Thickness, mm	5.2	5.2	5.8	6.4	6.4	7.8	9.8	11.8	13.8	15.8	18.0	20.0	22.0	26.0							1,2
			Nominal Pressure, bar	25	25	25	25	25	25	25	25	25	25	25	25	25	25							1,2,5

Description		End Conn.	Standard																				
Pipe	Seamless	Quick-Lock Bell & Spigot ends	Manu.'s Std.	Filament Wound, Glass Fiber-reinforced Epoxy, adhesive joint, ASTM D2996																			1
Pipe	Seamless	Taper / Taper Spigot ends	Manu.'s Std.							Filament Wound, Glass Fiber-reinforced Epoxy, adhesive joint, ASTM D2996													1
Elbow	LR 90 Deg.	Quick-Lock Bell ends	Manu.'s Std.	← Filament Wound, Glass Fiber-reinforced Epoxy, adhesive joint, ASTM D2996																			3,4
Elbow	LR 45 Deg.	Quick-Lock Bell ends	Manu.'s Std.	← Filament Wound, Glass Fiber-reinforced Epoxy, adhesive joint, ASTM D2996																			3,4
Elbow	30 Deg.	Quick-Lock Bell ends	Manu.'s Std.	← Filament Wound, Glass Fiber-reinforced Epoxy, adhesive joint, ASTM D2996																			3,4
Elbow	22.5 Deg.	Quick-Lock Bell ends	Manu.'s Std.	← Filament Wound, Glass Fiber-reinforced Epoxy, adhesive joint, ASTM D2996																			3,4
Elbow	11.25 Deg.	Quick-Lock Bell ends	Manu.'s Std.	← Filament Wound, Glass Fiber-reinforced Epoxy, adhesive joint, ASTM D2996																			3,4
Elbow	LR 90 Deg.	Taper Bell ends	Manu.'s Std.							Filament Wound, Glass Fiber-reinforced Epoxy, adhesive joint, ASTM D2996													3,4
Elbow	LR 45 Deg.	Taper Bell ends	Manu.'s Std.							Filament Wound, Glass Fiber-reinforced Epoxy, adhesive joint, ASTM D2996													3,4
Elbow	30 Deg.	Taper Bell ends	Manu.'s Std.							Filament Wound, Glass Fiber-reinforced Epoxy, adhesive joint, ASTM D2996													3,4
Elbow	22.5 Deg.	Taper Bell ends	Manu.'s Std.							Filament Wound, Glass Fiber-reinforced Epoxy, adhesive joint, ASTM D2996													3,4
Elbow	11.25 Deg.	Taper Bell ends	Manu.'s Std.							Filament Wound, Glass Fiber-reinforced Epoxy, adhesive joint, ASTM D2996													3,4
Equal Tee		Quick-Lock Bell ends	Manu.'s Std.	← Filament Wound, Glass Fiber-reinforced Epoxy, adhesive joint, ASTM D2996																			3
Equal Tee		Taper Bell ends	Manu.'s Std.							Filament Wound, Glass Fiber-reinforced Epoxy, adhesive joint, ASTM D2996													3
Reducing Tee		Quick-Lock Bell ends	Manu.'s Std.	← Filament Wound, Glass Fiber-reinforced Epoxy, adhesive joint, ASTM D2996																			3
Reducing Tee		Taper Bell ends	Manu.'s Std.							Filament Wound, Glass Fiber-reinforced Epoxy, adhesive joint, ASTM D2996													3
End Cap		Quick-Lock Bell ends	Manu.'s Std.	← Filament Wound, Glass Fiber-reinforced Epoxy, adhesive joint, ASTM D2996																			3
End Cap		Taper Bell ends	Manu.'s Std.							Filament Wound, Glass Fiber-reinforced Epoxy, adhesive joint, ASTM D2996													3

APPENDIX 15

Maximum Allowable Working Pressure At Temperature (Note 5)						
Deg.F	14	100	122	185	199	250
Deg.C	-10	38	50	85	93	121
Psi	362	362	362	362	362	174
Bar	25	25	25	25	25	12

Material : **Glass Reinforced Epoxy**
Rating : **ASME Rating 300**
Service: **Refer to Class index**
Corrosion Allow. : **0 mm**
Design Code : **ASME B31.3**

PIPING CLASS **BG1**

Văn bản này được xác thực tại https://eoffice.vietsov.com.vn với số định danh: 627/25-CV-XDM/NIPI

Description	End Conn.	Standard	Nominal Diameter, in: 1	1.1/2	2	3	4	6	8	10	12	14	16	18	20	24	Notes
Concentric Reducer	Quick-Lock Bell ends	Manu.'s Std.	← Filament Wound, Glass Fiber-reinforced Epoxy, adhesive joint, ASTM D2996														3
Concentric Reducer	Taper Bell ends	Manu.'s Std.	Filament Wound, Glass Fiber-reinforced Epoxy, adhesive joint, ASTM D2996														3
Eccentric Reducer	Quick-Lock Bell ends	Manu.'s Std.	← Filament Wound, Glass Fiber-reinforced Epoxy, adhesive joint, ASTM D2996														3
Eccentric Reducer	Taper Bell ends	Manu.'s Std.	Filament Wound, Glass Fiber-reinforced Epoxy, adhesive joint, ASTM D2996														3
Coupling	Quick-Lock Bell ends	Manu.'s Std.	← Filament Wound, Glass Fiber-reinforced Epoxy, adhesive joint, ASTM D2996														3
Coupling	Taper Bell ends	Manu.'s Std.	Filament Wound, Glass Fiber-reinforced Epoxy, adhesive joint, ASTM D2996														3
Adapter	Quick-Lock Spigot ends	Manu.'s Std.	← Filament Wound, Glass Fiber-reinforced Epoxy, adhesive joint, ASTM D2996														3
Adapter	Taper Spigot ends	Manu.'s Std.	Filament Wound, Glass Fiber-reinforced Epoxy, adhesive joint, ASTM D2996														3
Bushing Saddle	Bushing NPTF	ASME B16.11 & Manu.'s Std.	lament Wound, Glass Fiber-reinforced Epoxy, ASTM D2996, with Stainless Steel Threaded Bushir														3

Maximum Allowable Working Pressure At Temperature (Note 5)

Deg.F	14	100	122	185	199	250
Deg.C	-10	38	50	85	93	121
Psi	362	362	362	362	362	174
Bar	25	25	25	25	25	12

Material : **Glass Reinforced Epoxy**
Rating : **ASME Rating 300**
Service: **Refer to Class index**
Corrosion Allow. : **0 mm**
Design Code : **ASME B31.3**

PIPING CLASS **BG1**

APPENDIX 15

Văn bản này được xác thực tại https://eoffice.vietsov.com.vn với số định danh: 627/25-CV-XDM/NIPI

Description	End Conn.	Sch./ Rating	Standard	Nominal Diameter, in: 1	1.1/2	2	3	4	6	8	10	12	14	16	18	20	24	Notes
Elbow LR 90 Deg.	Flanged ends	300# FF	ASME B16.5	Filament Wound, Glass Fiber-reinforced Epoxy, adhesive joint, ASTM D2996														3
Elbow LR 45 Deg.	Flanged ends	300# FF	ASME B16.5	Filament Wound, Glass Fiber-reinforced Epoxy, adhesive joint, ASTM D2996														3
Elbow 30 Deg.	Flanged ends	300# FF	ASME B16.5	Filament Wound, Glass Fiber-reinforced Epoxy, adhesive joint, ASTM D2996														3
Elbow 22.5 Deg.	Flanged ends	300# FF	ASME B16.5	Filament Wound, Glass Fiber-reinforced Epoxy, adhesive joint, ASTM D2996														3
Elbow 11.25 Deg.	Flanged ends	300# FF	ASME B16.5	Filament Wound, Glass Fiber-reinforced Epoxy, adhesive joint, ASTM D2996														3
Equal Tee	Flanged ends	300# FF	ASME B16.5	Filament Wound, Glass Fiber-reinforced Epoxy, adhesive joint, ASTM D2996														3
Reducing Tee	Flanged ends	300# FF	ASME B16.5	Filament Wound, Glass Fiber-reinforced Epoxy, adhesive joint, ASTM D2996														3
Heavy Duty Flange	Quick-Lock Bell ends	300# FF	ASME B16.5	Filament Wound, Glass Fiber-reinforced Epoxy, adhesive joint, ASTM D2996														3
Heavy Duty Flange	Taper Bell	300# FF	ASME B16.5							Filament Wound, Glass Fiber-reinforced Epoxy, adhesive joint, ASTM D2996								3
Flange - Blind		300# FF	ASME B16.5	Filament Wound, Glass Fiber-reinforced Epoxy, ASTM D2996														3
Gasket Full Face		300# FF	ASME B16.21	Compressed Non-Asbestos Fiber Sheet, 3.0 mm thk.														3
Stud bolts fully threaded with two hex Nuts			ASME B18.2.1/ B18.2.2	ASTM A193 Gr.B7/ A194 Gr.2H Sermagard Coated														3

Maximum Allowable Working Pressure At Temperature (Note 5)

Deg.F	14	100	122	185	199	250
Deg.C	-10	38	50	85	93	121
Psi	362	362	362	362	362	174
Bar	25	25	25	25	25	12

Material : **Glass Reinforced Epoxy**
Rating : **ASME Rating 300**
Service: **Refer to Class index**
Corrosion Allow. : **0 mm**
Design Code : **ASME B31.3**

PIPING CLASS **BG1**

APPENDIX 15

Văn bản này được xác thực tại https://eoffice.vietsov.com.vn với số định danh: 627/25-CV-XDM/NIPI

			Nominal Diameter, in		1	1.1/2	2	3	4	6	8	10	12	14	16	18	20	24	Notes
Valve Code	Valve Type	Description	Rating	End Conn.															
BA32QL	Ball	Full Bore	3000 Psi	SW ends.	← Floating, Lever OP.														6
BA36QL	Valves	Full Bore	3000 Psi	SW x NPTF	← Floating, Lever OP.														6
BA31QL		Full Bore	3000 Psi	NPTF ends.	← Floating, Lever OP.														6
BAB3QL		Full Bore	300#	FF Flanged			Floating, Lever OP.												6
BAB3RL		Full Bore	300#	FF Flanged							← Trunnion, Lever OP.								6
BAB3RG		Full Bore	300#	FF Flanged							Trunnion, Gear OP.								6
BAB3SL		Reduced Bore	300#	FF Flanged			Floating, Lever OP.												6
BAB3TL		Reduced Bore	300#	FF Flanged							← Trunnion, Lever OP.								6
BAB3TG		Reduced Bore	300#	FF Flanged							Trunnion, Gear OP.								6
GL32EH	Globe		3000 Psi	SW ends.	← Rising Stem OS & Y, Handweel														6
GLB3EH	Valves		300#	FF Flanged			← Rising Stem OS & Y, Handweel												6
GLB3EG			300#	FF Flanged							Rising Stem OS & Y, Gear OP								6
GA32EH	Gate	Solid Wedge	3000 Psi	SW ends.	← Rising Stem OS & Y, Handweel														6
GAB3EH	Valves	Solid Wedge	300#	FF Flanged			← Rising Stem OS & Y, Handweel												6
GAB3KH		Flexible Wedge	300#	FF Flanged							← Rising Stem OS & Y, Handweel								6
GAB3KG		Flexible Wedge	300#	FF Flanged							Rising Stem OS & Y, Handweel								6
CH32MN	Check	Piston	3000 Psi	SW ends.	← Horizontal type														6
CHB3MN	Valves	Piston	300#	FF Flanged	← Horizontal type														6
CHB3NN		Swing	300#	FF Flanged			Horizontal & Vertical type												6
CHB3ON		Wafer	300#	FF Wafer			Dual Plate Type												6
BUB3EL	Butterfly	Full Lug Type	300#	FF Wafer			Lever OP.												6
BUB3EG	Valves	Full Lug Type	300#	FF Wafer							Gear OP.								6

APPENDIX 15

Maximum Allowable Working Pressure At Temperature (Note 5)						
Deg.F	14	100	122	185	199	250
Deg.C	-10	38	50	85	93	121
Psi	362	362	362	362	362	174
Bar	25	25	25	25	25	12

Material :	**Glass Reinforced Epoxy**
Rating :	**ASME Rating 300**
Service:	**Refer to Class index**
Corrosion Allow. :	**0 mm**
Design Code :	**ASME B31.3**

PIPING CLASS **BG1**

Văn bản này được xác thực tại https://eoffice.vietsov.com.vn với số định danh: 627/25-CV-XDM/NIPI

	BRANCH CONNECTIONS	Nominal Diameter, in		BRANCH SIZE 1	1.1/2	2	3	4	6	8	10	12	14	16	18	20	24	Notes
			24	6	6	6	6	6	6	7	4	4	4	4	4	4	3	
			20	6	6	6	6	6	6	7	4	4	4	4	4	3		
		H	18	6	6	6	6	6	6	4	4	4	4	4	3			
1	Equal Tee, Quick-Lock Bell	E	16	6	6	6	6	6	6	4	4	4	4	3				
2	Reducing Tee, Quick-Lock Bell	A	14	6	6	6	6	6	5	4	4	4	3					
3	Equal Tee, Taper Bell	D	12	6	6	6	6	6	5	4	4	3						
4	Reducing Tee, Taper Bell	E	10	6	6	6	6	5	5	4	3							
5	Reducing Tee, Taper Bell /	R	8	6	6	6	5	5	5	3								
	Quick-Lock Bell		6	6	6	2	2	2	1									
6	Saddle, Quick-Lock Bell	S	4	2	2	2	2	1										
7	Saddle,Taper Bell	I	3	2	2	2	1											
		Z	2	2	2	1												
		E	1.1/2	2	1													
			1	1														

NOTES :

1. An adhesive bonded for Quick-Lock joint and Taper/Taper joint is a rigid type of joining.
2. Pipe Wall thickness shall be confirmed by manufacturer.
3. The Pipe, fittings, accessories, flanges, and adhesive for GRE material shall be provided by the same manufacturer.
4. All Pipe Elbows shall be long radius type (1.5 ID).
5. Nominal Pressure (PN) for products, Maximum allowable design pressure - temperature shall be confirmed by manufacturer.
6. For instrument connection, hydrotest vents and small bore drains use bushing saddle with 3/4in NPTF stainless steel bushed outlet.
7. Valve for Vent, drain and instrument connection shall be used 90/10 Cu-Ni material unless noted otherwise.
8. Refer to data sheet for Manual Valves: VSP-NIPI-TYP-TS-PI1-DS

APPENDIX 15

Maximum Allowable Working Pressure At Temperature (Note 5)						
Deg.F	14	100	122	185	199	250
Deg.C	-10	38	50	85	93	121
Psi	362	362	362	362	362	174
Bar	25	25	25	25	25	12

Material :	**Glass Reinforced Epoxy**
Rating :	**ASME Rating 300**
Service:	**Refer to Class index**
Corrosion Allow. :	**0 mm**
Design Code :	**ASME B31.3**

PIPING CLASS **BG1**

Văn bản này được xác thực tại https://eoffice.vietsov.com.vn với số định danh: 627/25-CV-XDM/NIPI

Description	End Conn.	Sch./Rating	Standard	Nominal Diameter, in	1/2	3/4	1	1.1/2	2	2.1/2	3	4	6	8	10	12	14	16	18	20	24	Notes
				ASME Schedule	160	160	160	160	80	80	80	80	40	40	40	XS	XS	XS	XS	XS	XS	
				Wall Thickness, mm	4.78	5.56	6.35	7.14	5.54	7.01	7.62	8.56	7.11	8.18	9.27	10.31	11.13	12.7	12.7	12.7	12.7	
Pipe Seamless	PE		ASME B36.10M		API 5L Gr.X60																	
Pipe Seamless	BE		ASME B36.10M						API 5L Gr.X60													
Pipe	BE		ASME B36.10M						API 5L Gr.X60 Welded (LSAW) →													2
Elbow LR 90 Deg	BW	As Pipe	ASME B16.9						ASTM A860-WPHY60													
Elbow LR 45 Deg	BW	As Pipe	ASME B16.9						ASTM A860-WPHY60													
Elbow 90 Deg.	SW	6000#	ASME B16.11		ASTM A694-Gr.F60																	
Elbow 45 Deg.	SW	6000#	ASME B16.11		ASTM A694-Gr.F60																	
Equal Tee	BW	As Pipe	ASME B16.9						ASTM A860-WPHY60													
Reducing Tee	BW	As Pipe	ASME B16.9						ASTM A860-WPHY60													
Equal Tee	SW	6000#	ASME B16.11		ASTM A694-Gr.F60																	
Reducing Tee	SW	6000#	ASME B16.11		ASTM A694-Gr.F60																	
End Cap	BW	As Pipe	ASME B16.9						ASTM A860-WPHY60													
End Cap	SW	6000#	ASME B16.11		ASTM A694-Gr.F60																	
End Cap	THR'D	3000#	ASME B16.11		ASTM A694-Gr.F60																	1
Eccentric Reducer	BW	As Pipe	ASME B16.9						ASTM A860-WPHY60													
Concentric Reducer	BW	As Pipe	ASME B16.9						ASTM A860-WPHY60													
Concentric Swage	BLE/PSE	As Pipe	MSS SP-95		ASTM A694-Gr.F60																	
Eccentric Swage	BLE/PSE	As Pipe	MSS SP-95		ASTM A694-Gr.F60																	
Concentric Swage	PBE	As Pipe	MSS SP-95		ASTM A694-Gr.F60																	
Eccentric Swage	PBE	As Pipe	MSS SP-95		ASTM A694-Gr.F60																	
Coupling - Full	SW	6000#	ASME B16.11		ASTM A694-Gr.F60																	
Plug Hex Head	THR'D	3000#	ASME B16.11		ASTM A694-Gr.F60																	1
Nipple, 100mm length	PBE	As Pipe	ASME B36.10M		API 5L Gr.X60																	
Nipple, 100mm length	TBE	As Pipe	ASME B36.10M		API 5L Gr.X60																	
Weldolet	BW	As Pipe	MSS SP-97						ASTM A694-Gr.F60													
Sockolet	SW	6000#	MSS SP-97		ASTM A694-Gr.F60																	
Threadolet	THR'D	3000#	MSS SP-97		ASTM A694-Gr.F60																	1

APPENDIX 16

Maximum Allowable Working Pressure At Temperature									
ASME B16.5 - Material Group 1.1									
Deg.C	0	38	50	100	150	200			
kPa	5110	5110	5010	4660	4510	4380			
Bar	51.1	51.1	50.1	46.6	45.1	43.8			

Material :	**Carbon Steel High Strength**
Rating :	**ASME Rating 300**
Service:	**Refer to Class index**
Corrosion Allow. :	**3.0 mm**
Design Code :	**ASME B31.4**

PIPING CLASS **BX1**

Văn bản này được xác thực tại https://eoffice.vietsov.com.vn với số định danh: 627/25-CV-XDM/NIPI

Description	End Conn.	Sch./Rating	Standard	Nominal Diameter, in: 1/2	3/4	1	1.1/2	2	2.1/2	3	4	6	8	10	12	14	16	18	20	24	Notes
Flange - Weld Neck	BW	300# RF	ASME B16.5					ASTM A694-Gr.F60 Bore to match pipe													
Flange - Weld Neck	BW	300# RTJ	ASME B16.5										ASTM A694-Gr.F60 Bore to match pipe								4
Flange - Socket Weld	SW	300# RF	ASME B16.5	ASTM A694-Gr.F60																	
Flange - Blind		300# RF	ASME B16.5	ASTM A694-Gr.F60																	
Flange - Blind		300# RTJ	ASME B16.5										ASTM A694-Gr.F60								4
Spectacle Blind		300# RF	ASME B16.48	ASTM A694-Gr.F60																	
Spade/ Spacer		300# RF	ASME B16.48												ASTM A694-Gr.F60						
Spectacle Blind		300# RTJ	ASME B16.48	ASTM A694-Gr.F60 →																	4
Spade/ Spacer		300# RTJ	ASME B16.48												ASTM A694-Gr.F60						4
Gasket SPWD		300# RF	ASME B16.20	Spiral Wound Gasket, 4,5mm thk., Graphite Filler, SS outer ring & SS inner ring																	
Gasket		300# RTJ	ASME B16.20										Gasket Soft Iron, Hardness 90 BHN, Electroplated Zinc Coated, Octagonal RTJ, Type R								4
Stud bolts fully threaded			ASME B18.2.1/ B18.2.2	ASTM A193 Gr.B7/ A194 Gr.2H Sermagard Coated																	

Maximum Allowable Working Pressure At Temperature

ASME B16.5 - Material Group 1.1

Deg.C	0	38	50	100	150	200
kPa	5110	5110	5010	4660	4510	4380
Bar	51.1	51.1	50.1	46.6	45.1	43.8

Material : **Carbon Steel High Strength**
Rating : **ASME Rating 300**
Service: **Refer to Class index**
Corrosion Allow. : **3.0 mm**
Design Code : **ASME B31.4**

PIPING CLASS **BX1**

APPENDIX 16

Văn bản này được xác thực tại https://eoffice.vietsov.com.vn với số định danh: 627/25-CV-XDM/NIPI

			Nominal Diameter, DN		1/2	3/4	1	1.1/2	2	2.1/2	3	4	6	8	10	12	14	16	18	20	24	Notes
Valve Code	Valve Type	Description	Rating	End Conn.																		
BA321L	Ball	Full Bore	3000 Psi / 800#	SW ends.	Floating, Lever OP.																	3
BA361L	Valves	Full Bore		SW x NPTF	Floating, Lever OP.																	3
BA311L		Full Bore		NPTF ends.	Floating, Lever OP.																	3
BAB41L		Full Bore	300#	RF Flanged	Floating, Lever OP.																	3
BAB4UL		Full Bore	300#	RF Flanged	Trunnion, Lever OP. →																	3
BAB4UG		Full Bore	300#	RF Flanged										Trunnion, Gear OP.								3
BAB42L		Reduced Bore	300#	RF Flanged	Floating, Lever OP.																	3
BAB4VL		Reduced Bore	300#	RF Flanged	Trunnion, Lever OP. →																	3
BAB4VG		Reduced Bore	300#	RF Flanged										Trunnion, Gear OP.								3
GL32FH	Globe		3000 Psi / 800#	SW ends.	Rising Stem OS & Y, Handweel																	3
GLB4FH	Valves		300#	RF Flanged					Rising Stem OS & Y, Handweel													3
GLB4FG			300#	RF Flanged										Rising Stem OS & Y, Gear OP								3
GA32FH	Gate	Solid Wedge	3000 Psi / 800#	SW ends.	Rising Stem OS & Y, Handweel																	3
GAB4FH	Valves	Solid Wedge	300#	RF Flanged					← Rising Stem OS & Y, Handweel													3
GAB4LH		Flexible Wedge	300#	RF Flanged	Rising Stem OS & Y, Handweel →																	3
GAB4LG		Flexible Wedge	300#	RF Flanged											Rising Stem OS & Y, Gear OP.							3
CH32PN	Check	Piston	3000 Psi / 800#	SW ends.	Horizontal type																	3
CHB4PN	Valves	Piston	300#	RF Flanged	Horizontal type																	3
CHB4QN		Swing	300#	RF Flanged					Horizontal & Vertical type													3
CHB4RN		Wafer	300#	RF Wafer					Horizontal & Vertical type													3
NV32ET	Needle		3000 Psi / 800#	SW ends.	Inside Screw, T-bar OP.																	3
NV36ET	Valves			SW x NPTF	Inside Screw, T-bar OP.																	3
NV31ET				NPTF ends.	Inside Screw, T-bar OP.																	3

Maximum Allowable Working Pressure At Temperature

ASME B16.5 - Material Group 1.1

Deg.C	0	38	50	100	150	200
kPa	5110	5110	5010	4660	4510	4380
Bar	51.1	51.1	50.1	46.6	45.1	43.8

Material : **Carbon Steel High Strength**
Rating : **ASME Rating 300**
Service: **Refer to Class index**
Corrosion Allow. : **3.0 mm**
Design Code : **ASME B31.4**

PIPING CLASS **BX1**

APPENDIX 16

Văn bản này được xác thực tại https://eoffice.vietsov.com.vn với số định danh: 627/25-CV-XDM/NIPI

BRANCH CONNECTIONS

1 Equal Tee BW.
2 Reducing Tee BW.
3 Equal Tee SW.
4 Reducing Tee SW.
5 Weldolet
6 Sockolet

Nominal Diameter, in		BRANCH SIZE 1/2	3/4	1	1.1/2	2	2.1/2	3	4	6	8	10	12	14	16	18	20	24	Notes
	24	6	6	6	6	5	5	5	5	5	5	5	2	2	2	2	2	1	
	20	6	6	6	6	5	5	5	5	5	5	2	2	2	2	2	1		
	18	6	6	6	6	5	5	5	5	5	5	2	2	2	2	1			
	16	6	6	6	6	5	5	5	5	5	2	2	2	2	1				
	14	6	6	6	6	5	5	5	5	5	2	2	2	1					
H	12	6	6	6	6	5	5	5	5	2	2	2	1						
E	10	6	6	6	6	5	5	5	2	2	2	1							
A	8	6	6	6	6	5	5	5	2	2	1								
D	6	6	6	6	6	5	2	2	2	1									
E	4	6	6	6	6	2	2	2	1										
R	3	6	6	6	6	2	2	1											
	2.1/2	6	6	6	6	2	1												
S	2	6	6	6	2	1													
I	1.1/2	4	4	4	3														
Z	1	4	4	3															
E	3/4	4	3																
	1/2	3																	

NOTES :

1. Screwed connections shall be NPT taper/ taper combination in accordance with ASME B1.20.1.
2. Welded pipe type shall be longitudinal SAW, 100% Radiographed, Quality factors = 1 (refer to ASME B31.3 - Table A-1B)
3. Refer to data sheet for Manual Valves: VSP-NIPI-TYP-TS-PI1-DS
4. RTJ Flange are only used for pigging lines.

APPENDIX 16

Maximum Allowable Working Pressure At Temperature									
ASME B16.5 - Material Group 1.1									
Deg.C	0	38	50	100	150	200			
kPa	5110	5110	5010	4660	4510	4380			
Bar	51.1	51.1	50.1	46.6	45.1	43.8			

Material :	**Carbon Steel High Strength**
Rating :	**ASME Rating 300**
Service:	**Refer to Class index**
Corrosion Allow. :	**3.0 mm**
Design Code :	**ASME B31.4**

PIPING CLASS **BX1**

Văn bản này được xác thực tại https://eoffice.vietsov.com.vn với số định danh: 627/25-CV-XDM/NIPI

Description		End Conn.	Sch./Rating	Standard	Nominal Diameter, in	1/2	3/4	1	1.1/2	2	2.1/2	3	4	6	8	10	12	14	16	18	20	24	26	28	30	Notes
					ASME Schedule	160	160	160	160	160	160	80	80	80	80	80	80	80	80	80	80	80	-	Note 3	Note 3	
					Wall Thickness, mm	4.78	5.56	6.35	7.14	8.74	9.53	7.62	8.56	10.97	12.7	15.09	17.48	19.05	21.44	23.83	26.19	30.96	25.4	27	28	
Pipe	Seamless	PE		ASME B36.10M	ASTM A106 Gr.B																					2
Pipe	Seamless	BE		ASME B36.10M						ASTM A106 Gr.B																2
Pipe	Seamless	BE		ASME B36.10M																API 5L Gr.B Welded (LSAW)						2,3
Elbow	LR 90 Deg.	BW	As Pipe	ASME B16.9						ASTM A234 Gr. WPB																
Elbow	LR 45 Deg.	BW	As Pipe	ASME B16.9						ASTM A234 Gr. WPB																
Elbow	90 Deg.	SW	6000#	ASME B16.11	ASTM A105N																					
Elbow	45 Deg.	SW	6000#	ASME B16.11	ASTM A105N																					
Equal Tee		BW	As Pipe	ASME B16.9						ASTM A234 Gr. WPB																
Reducing Tee		BW	As Pipe	ASME B16.9						ASTM A234 Gr. WPB																
Equal Tee		SW	6000#	ASME B16.11	ASTM A105N																					
Reducing Tee		SW	6000#	ASME B16.11	ASTM A105N																					
End Cap		BW	As Pipe	ASME B16.9						ASTM A234 Gr. WPB																
End Cap		SW	6000#	ASME B16.11	ASTM A105N																					
End Cap		THR'D	3000#	ASME B16.11	ASTM A105N																					
Eccentric Reducer		BW	As Pipe	ASME B16.9						ASTM A234 Gr. WPB																
Concentric Reducer		BW	As Pipe	ASME B16.9						ASTM A234 Gr. WPB																
Concentric Swage		BLE/PSE	As Pipe	MSS SP-95	ASTM A105N																					
Eccentric Swage		BLE/PSE	As Pipe	MSS SP-95	ASTM A105N																					
Concentric Swage		PBE	As Pipe	MSS SP-95	ASTM A105N																					
Eccentric Swage		PBE	As Pipe	MSS SP-95	ASTM A105N																					
Coupling - Full		SW	6000#	ASME B16.11	ASTM A105N																					
Plug Hex Head		THR'D	3000#	ASME B16.11	ASTM A105N																					1
Nipple, 100mm length		PBE	As Pipe	ASME B36.10M	ASTM A106 Gr. B																					
Nipple, 100mm length		TBE	As Pipe	ASME B36.10M	ASTM A106 Gr. B																					
Weldolet		BW	As Pipe	MSS SP-97						ASTM A105N																
Sockolet		SW	6000#	MSS SP-97	ASTM A105N																					
Threadolet		THR'D	3000#	MSS SP-97	ASTM A105N																					

Maximum Allowable Working Pressure At Temperature
ASME B16.5 & ASME B16.47 - Material Group 1.1

Deg.C	0	38	50	100	150	200
kPa	10210	10210	10020	9320	9020	8760
Bar	102.1	102.1	100.2	93.2	90.2	87.6

Material : **Carbon Steel**
Rating : **ASME Rating 600**
Service: **Refer to Class index**
Corrosion Allow. : **3.0 mm**
Design Code : **ASME B31.3**

PIPING CLASS **CC1**

Sheet 1 of 4

APPENDIX 17

Văn bản này được xác thực tại https://eoffice.vietsov.com.vn với số định danh: 627/25-CV-XDM/NIPI

Description	End Conn.	Sch./Rating	Standard	Nominal Diameter, in: 1/2	3/4	1	1.1/2	2	2.1/2	3	4	6	8	10	12	14	16	18	20	24	26	28	30	Notes
Flange - Weld Neck	BW	600# RF	ASME B16.5					ASTM A105N Bore to match pipe																
Flange - Weld Neck	BW	600# RF	ASME B16.47 Series A																	ASTM A105N Bore to match pipe →				
Flange - Socket Weld	SW	600# RF	ASME B16.5	ASTM A105N																				
Flange - Blind		600# RF	ASME B16.5																					
Flange - Blind		600# RF	ASME B16.47 Series A																	ASTM A105N Bore to match pipe →				
Spectacle Blind		600# RF	ASME B16.48																					
Spade/ Spacer		600# RF	ASME B16.48																					
Spade/ Spacer		600# RF	ASME B16.47 Series A																					
Gasket SPWD		600# RF	ASME B16.20																					
Stud bolts fully threaded			ASME B18.2.1/ B18.2.2																					

Maximum Allowable Working Pressure At Temperature									
ASME B16.5 & ASME B16.47 - Material Group 1.1									
Deg.C	0	38	50	100	150	200			
kPa	10210	10210	10020	9320	9020	8760			
Bar	102.1	102.1	100.2	93.2	90.2	87.6			

Material :	**Carbon Steel**
Rating :	**ASME Rating 600**
Service:	**Refer to Class index**
Corrosion Allow. :	**3.0 mm**
Design Code :	**ASME B31.3**

PIPING CLASS **CC1**

APPENDIX 17

Văn bản này được xác thực tại https://eoffice.vietsov.com.vn với số định danh: 627/25-CV-XDM/NIPI

			Nominal Diameter, in		1/2	3/4	1	1.1/2	2	2.1/2	3	4	6	8	10	12	14	16	18	20	24	26	28	30	Notes
Valve Code	Valve Type	Description	Rating	End Conn.																				
BA32AL	Ball	Full Bore	3000 Psi / 800#	SW ends.	Floating, Lever OP.																			5
BA36AL	Valves	Full Bore		SW x NPTF	Floating, Lever OP.																			5
BA31AL		Full Bore		NPTF ends.	Floating, Lever OP.																			5
BAC4AL		Full Bore	600#	RF Flanged	Floating, Lever OP.																			5
BAC4BL		Full Bore	600#	RF Flanged					Trunnion, Lever OP.															5
BAC4BG		Full Bore	600#	RF Flanged									Trunnion, Gear OP.											5
BAC4CL		Reduced Bore	600#	RF Flanged	Floating, Lever OP.																			5
BAC4DL		Reduced Bore	600#	RF Flanged					Trunnion, Lever OP.															5
BAC4DG		Reduced Bore	600#	RF Flanged									Trunnion, Gear OP.											5
GL32AH	Globe		3000 Psi / 800#	SW ends.	← Rising Stem OS & Y, Handweel																			5
GLC4AH	Valves			RF Flanged					← Rising Stem OS & Y, Handweel															5
GLC4AG				RF Flanged									Rising Stem OS & Y, Gear OP											5
GA32AH	Gate	Solid Wedge	3000 Psi / 800#	SW ends.				←	Rising Stem OS & Y, Handweel															5
GAC4AH	Valves	Solid Wedge	600#	RF Flanged					←	Rising Stem OS & Y, Handweel														5
GAC4GH		Flexible Wedge	600#	RF Flanged	Rising Stem OS & Y, Handweel					→														5
GAC4GG		Flexible Wedge	600#	RF Flanged									Rising Stem OS & Y, Gear OP.											5
CH32AN	Check	Piston	3000 Psi / 800#	SW ends.	Horizontal type																			5
CHC4AN	Valves	Piston	600#	RF Flanged	Horizontal type																			5
CHC4BN		Swing	600#	RF Flanged					Horizontal & Vertical type															5
CHC4CN		Wafer	600#	RF Wafer					Dual Plate Type															5
NV32AT	Needle		3000 Psi / 800#	SW ends.	Inside Screw, T-bar OP.																			5
NV36AT	Valves			SW x NPTF	Inside Screw, T-bar OP.																			5
NV31AT				NPTF ends.	Inside Screw, T-bar OP.																			5
PLC4CL	Plug	Regular-Pattern	600#	RF Flanged					Lever OP.															5
PLC4BG	Valves	Venturi-Pattern	600#	RF Flanged									Gear OP.											5
MVC9AT	Monoflange Valves	Integral Body	600#	RF Flanged x NPTF ends.	Single Block & Bleed, T-bar OP.																			5

Maximum Allowable Working Pressure At Temperature
ASME B16.5 & ASME B16.47 - Material Group 1.1

Deg.C	0	38	50	100	150	200
kPa	10210	10210	10020	9320	9020	8760
Bar	102.1	102.1	100.2	93.2	90.2	87.6

Material : **Carbon Steel**
Rating : **ASME Rating 600**
Service: **Refer to Class index**
Corrosion Allow. : **3.0 mm**
Design Code : **ASME B31.3**

PIPING CLASS **CC1**

Sheet 3 of 4

APPENDIX 17

Văn bản này được xác thực tại https://eoffice.vietsov.com.vn với số định danh: 627/25-CV-XDM/NIPI

BRANCH CONNECTIONS

1 Equal Tee BW.
2 Reducing Tee BW.
3 Equal Tee SW.
4 Reducing Tee SW.
5 Weldolet
6 Sockolet

Nominal Diameter, in		BRANCH SIZE 1/2	3/4	1	1.1/2	2	2.1/2	3	4	6	8	10	12	14	16	18	20	24	26	28	30	Notes
	30	6	6	6	6	5	5	5	5	5	5	5	5	2	2	2	2	2	2	2	1	
	28	6	6	6	6	5	5	5	5	5	5	5	5	2	2	2	2	2	2	1		
	26	6	6	6	6	5	5	5	5	5	5	5	2	2	2	2	2	2	1			
	24	6	6	6	6	5	5	5	5	5	5	5	2	2	2	2	2	1				
	20	6	6	6	6	5	5	5	5	5	5	2	2	2	2	2	1					
H	18	6	6	6	6	5	5	5	5	5	5	2	2	2	2	1						
E	16	6	6	6	6	5	5	5	5	5	2	2	2	2	1							
A	14	6	6	6	6	5	5	5	5	5	2	2	2	1								
D	12	6	6	6	6	5	5	5	5	2	2	2	1									
E	10	6	6	6	6	5	5	5	2	2	2	1										
R	8	6	6	6	6	5	5	5	2	2	1											
	6	6	6	6	6	5	2	2	2	1												
S	4	6	6	6	6	2	2	2	1													
I	3	6	6	6	6	2	2	1														
Z	2.1/2	6	6	6	6	2	1															
E	2	6	6	6	2	1																
	1.1/2	4	4	4	3																	
	1	4	4	3																		
	3/4	4	3																			
	1/2	3																				

NOTES :

1. Screwed connections shall be NPT taper/ taper combination in accordance with ASME B1.20.1.
2. Pipe API 5L Gr. B seamless is an acceptable substitute for ASTM A106 Gr. B where specified.
3. No standard pipe schedule available. The selected pipe wall thickness shall be higher than the minimum required wall thickness in this table
4. Welded pipe type shall be longitudinal SAW, 100% Radiographed, Quality factors = 1 (refer to ASME B31.3 - Table A-1B)
5. Refer to data sheet for Manual Valves: VSP-NIPI-TYP-TS-PI1-DS

APPENDIX 17

Maximum Allowable Working Pressure At Temperature									
ASME B16.5 & ASME B16.47 - Material Group 1.1									
Deg.C	0	38	50	100	150	200			
kPa	10210	10210	10020	9320	9020	8760			
Bar	102.1	102.1	100.2	93.2	90.2	87.6			

Material :	**Carbon Steel**
Rating :	**ASME Rating 600**
Service:	**Refer to Class index**
Corrosion Allow. :	**3.0 mm**
Design Code :	**ASME B31.3**

PIPING CLASS **CC1**

Văn bản này được xác thực tại https://eoffice.vietsov.com.vn với số định danh: 627/25-CV-XDM/NIPI

PIPING MATERIAL CLASS SPECIFICATION: CX1 - 600#

	Nominal Diameter, in	1/2	3/4	1	1.1/2	2	2.1/2	3	4	6	8	10	12	14	16	18	20	24	Notes
	ASME Schedule	160	160	160	160	80	80	80	80	40	40	40	40	40	40	40	40	40	
	Wall Thickness, mm	4.78	5.56	6.35	7.14	5.54	7.01	7.62	8.56	7.11	8.18	9.27	10.31	11.13	12.7	14.27	15.09	17.48	

Description	End Conn.	Sch./Rating	Standard																
Pipe Seamless	PE		ASME B36.10M	API 5L Gr.X60															
Pipe Seamless	BE		ASME B36.10M		API 5L Gr.X60														
Pipe Seamless	BE		ASME B36.10M		API 5L Gr.X60 Welded (LSAW) →														2
Elbow LR 90 Deg	BW	As Pipe	ASME B16.9		ASTM A860-WPHY60														
Elbow LR 45 Deg	BW	As Pipe	ASME B16.9		ASTM A860-WPHY60														
Elbow 90 Deg.	SW	6000#	ASME B16.11	ASTM A694-Gr.F60															
Elbow 45 Deg.	SW	6000#	ASME B16.11	ASTM A694-Gr.F60															
Equal Tee	BW	As Pipe	ASME B16.9		ASTM A860-WPHY60														
Reducing Tee	BW	As Pipe	ASME B16.9		ASTM A860-WPHY60														
Equal Tee	SW	6000#	ASME B16.11	ASTM A694-Gr.F60															
Reducing Tee	SW	6000#	ASME B16.11	ASTM A694-Gr.F60															
End Cap	BW	As Pipe	ASME B16.9		ASTM A860-WPHY60														
End Cap	SW	6000#	ASME B16.11	ASTM A694-Gr.F60															
End Cap	THR'D	3000#	ASME B16.11	ASTM A694-Gr.F60															
Eccentric Reducer	BW	As Pipe	ASME B16.9		ASTM A860-WPHY60														
Concentric Reducer	BW	As Pipe	ASME B16.9		ASTM A860-WPHY60														
Concentric Swage	BLE/PSE	As Pipe	MSS SP-95	ASTM A694-Gr.F60															
Eccentric Swage	BLE/PSE	As Pipe	MSS SP-95	ASTM A694-Gr.F60															
Concentric Swage	PBE	As Pipe	MSS SP-95	ASTM A694-Gr.F60															
Eccentric Swage	PBE	As Pipe	MSS SP-95	ASTM A694-Gr.F60															
Coupling - Full	SW	6000#	ASME B16.11	ASTM A694-Gr.F60															
Plug Hex Head	THR'D	3000#	ASME B16.11	ASTM A694-Gr.F60															
Nipple, 100mm length	PBE	As Pipe	ASME B36.10M	API 5L Gr.X60															
Nipple, 100mm length	TBE	As Pipe	ASME B36.10M	API 5L Gr.X60															
Weldolet	BW	As Pipe	MSS SP-97		ASTM A694-Gr.F60														
Sockolet	SW	6000#	MSS SP-97	ASTM A694-Gr.F60															
Threadolet	THR'D	3000#	MSS SP-97	ASTM A694-Gr.F60															

APPENDIX 18

Maximum Allowable Working Pressure At Temperature
ASME B16.5 - Material Group 1.1

Deg.C	0	38	50	100	150	200
kPa	10210	10210	10020	9320	9020	8760
Bar	102.1	102.1	100.2	93.2	90.2	87.6

Material : **Carbon Steel High Strength**
Rating : **ASME Rating 600**
Service: **Refer to Class index**
Corrosion Allow. : **3.0 mm**
Design Code : **ASME B31.4**

PIPING CLASS **CX1**

Văn bản này được xác thực tại https://eoffice.vietsov.com.vn với số định danh: 627/25-CV-XDM/NIPI

Description	End Conn.	Sch./Rating	Standard	Nominal Diameter, in: 1/2	3/4	1	1.1/2	2	2.1/2	3	4	6	8	10	12	14	16	18	20	24	Notes
Flange - Weld Neck	BW	600# RF	ASME B16.5					ASTM A694-Gr.F60 Bore to match pipe													
Flange - Weld Neck	BW	600# RTJ	ASME B16.5										ASTM A694-Gr.F60 Bore to match pipe								4
Flange - Socket Weld	SW	600# RF	ASME B16.5	ASTM A694-Gr.F60																	
Flange - Blind		600# RF	ASME B16.5	ASTM A694-Gr.F60																	
Flange - Blind		600# RTJ	ASME B16.5										ASTM A694-Gr.F60								4
Spectacle Blind		600# RF	ASME B16.48	ASTM A694-Gr.F60																	
Spade/ Spacer		600# RF	ASME B16.48												ASTM A694-Gr.F60						
Spectacle Blind		600# RTJ	ASME B16.48	ASTM A694-Gr.F60 →																	4
Spade/ Spacer		600# RTJ	ASME B16.48												ASTM A694-Gr.F60						4
Gasket SPWD		600# RF	ASME B16.20	Spiral Wound Gasket, 4,5mm thk., Graphite Fillter, SS outer ring & SS inner ring																	
Gasket		600# RTJ	ASME B16.20										Gasket Soft Iron, Hardness 90 BHN, Electroplated Zinc Coated, Octagonal RTJ, Type R								4
Stud bolts fully threaded			ASME B18.2.1/ B18.2.2	ASTM A193 Gr.B7/ A194 Gr.2H Sermagard Coated																	

APPENDIX 18

Maximum Allowable Working Pressure At Temperature									
ASME B16.5 - Material Group 1.1									
Deg.C	0	38	50	100	150	200			
kPa	10210	10210	10020	9320	9020	8760			
Bar	102.1	102.1	100.2	93.2	90.2	87.6			

Material :	**Carbon Steel High Strength**
Rating :	**ASME Rating 600**
Service:	**Refer to Class index**
Corrosion Allow. :	**3.0 mm**
Design Code :	**ASME B31.4**

PIPING CLASS **CX1**

Văn bản này được xác thực tại https://eoffice.vietsov.com.vn với số định danh: 627/25-CV-XDM/NIPI

			Nominal Diameter, in		1/2	3/4	1	1.1/2	2	2.1/2	3	4	6	8	10	12	14	16	18	20	24	Notes
Valve Code	Valve Type	Description	Rating	End Conn.																		
BA321L	Ball	Full Bore	3000 Psi / 800#	SW ends.	Floating, Lever OP.																	3
BA361L	Valves	Full Bore		SW x NPTF	Floating, Lever OP.																	3
BA311L		Full Bore		NPTF ends.	Floating, Lever OP.																	3
BAC41L		Full Bore	600#	RF Flanged	Floating, Lever OP.																	3
BAC4UL		Full Bore	600#	RF Flanged					Trunnion, Lever OP.													3
BAC4UG		Full Bore	600#	RF Flanged									Trunnion, Gear OP.									3
BAC42L		Reduced Bore	600#	RF Flanged	Floating, Lever OP.																	3
BAC4VL		Reduced Bore	600#	RF Flanged					Trunnion, Lever OP.													3
BAC4VG		Reduced Bore	600#	RF Flanged									Trunnion, Gear OP.									3
GL32FH	Globe		3000 Psi / 800#	SW ends.	←				Rising Stem OS & Y, Handweel													3
GLC4FH	Valves			RF Flanged					←				Rising Stem OS & Y, Handweel									3
GLC4FG				RF Flanged									Rising Stem OS & Y, Gear OP									3
GA32FH	Gate	Solid Wedge	3000 Psi / 800#	SW ends.	←				Rising Stem OS & Y, Handweel													3
GAC4FH	Valves	Solid Wedge	600#	RF Flanged					←		Rising Stem OS & Y, Handweel											3
GAC4LH		Flexible Wedge	600#	RF Flanged	Rising Stem OS & Y, Handweel				→													3
GAC4LG		Flexible Wedge	600#	RF Flanged									Rising Stem OS & Y, Gear OP.									3
CH32PN	Check	Piston	3000 Psi / 800#	SW ends.	Horizontal type																	3
CHC4PN	Valves	Piston	600#	RF Flanged	Horizontal type																	3
CHC4QN		Swing	600#	RF Flanged					Horizontal & Vertical type													3
CHC4RN		Wafer	600#	RF Wafer					Dual Plate Type													3
NV32ET	Needle		3000 Psi / 800#	SW ends.	Inside Screw, T-bar OP.																	3
NV36ET	Valves			SW x NPTF	Inside Screw, T-bar OP.																	3
NV31ET				NPTF ends.	Inside Screw, T-bar OP.																	3

Maximum Allowable Working Pressure At Temperature

ASME B16.5 - Material Group 1.1

Deg.C	0	38	50	100	150	200
kPa	10210	10210	10020	9320	9020	8760
Bar	102.1	102.1	100.2	93.2	90.2	87.6

Material :	**Carbon Steel High Strength**
Rating :	**ASME Rating 600**
Service:	**Refer to Class index**
Corrosion Allow. :	**3.0 mm**
Design Code :	**ASME B31.4**

PIPING CLASS **CX1**

APPENDIX 18

Văn bản này được xác thực tại https://eoffice.vietsov.com.vn với số định danh: 627/25-CV-XDM/NIPI

BRANCH CONNECTIONS

1 Equal Tee BW.
2 Reducing Tee BW.
3 Equal Tee SW.
4 Reducing Tee SW.
5 Weldolet
6 Sockolet

Nominal Diameter, in		BRANCH SIZE 1/2	3/4	1	1.1/2	2	2.1/2	3	4	6	8	10	12	14	16	18	20	24	Notes
	24	6	6	6	6	5	5	5	5	5	5	5	2	2	2	2	2	1	
	20	6	6	6	6	5	5	5	5	5	5	2	2	2	2	2	1		
	18	6	6	6	6	5	5	5	5	5	5	2	2	2	2	1			
	16	6	6	6	6	5	5	5	5	5	2	2	2	2	1				
	14	6	6	6	6	5	5	5	5	5	2	2	2	1					
H	12	6	6	6	6	5	5	5	5	2	2	2	1						
E	10	6	6	6	6	5	5	5	2	2	2	1							
A	8	6	6	6	6	5	5	5	2	2	1								
D	6	6	6	6	6	5	2	2	2	1									
E	4	6	6	6	6	2	2	2	1										
R	3	6	6	6	6	2	2	1											
	2.1/2	6	6	6	6	2	1												
S	2	6	6	6	2	1													
I	1.1/2	4	4	4	3														
Z	1	4	4	3															
E	3/4	4	3																
	1/2	3																	

NOTES :

1. Screwed connections shall be NPT taper/ taper combination in accordance with ASME B1.20.1.
2. Welded pipe type shall be longitudinal SAW, 100% Radiographed, Quality factors = 1 (refer to ASME B31.3 - Table A-1B)
3. Refer to data sheet for Manual Valves: VSP-NIPI-TYP-TS-PI1-DS
4. RTJ Flange are only used for pigging lines.

APPENDIX 18

Maximum Allowable Working Pressure At Temperature									
ASME B16.5 - Material Group 1.1									
Deg.C	0	38	50	100	150	200			
kPa	10210	10210	10020	9320	9020	8760			
Bar	102.1	102.1	100.2	93.2	90.2	87.6			

Material :	**Carbon Steel High Strength**	PIPING CLASS	
Rating :	**ASME Rating 600**	**CX1**	
Service:	**Refer to Class index**		
Corrosion Allow. :	**3.0 mm**	Sheet 4 of 4	
Design Code :	**ASME B31.4**		

Văn bản này được xác thực tại https://eoffice.vietsov.com.vn với số định danh: 627/25-CV-XDM/NIPI

	Nominal Diameter, in	1/2	3/4	1	1.1/2	2	2.1/2	3	4	6	8	10	12	14	16	18	20	24	Notes
	ASME Schedule	160	160	160	160	160	160	160	120	120	120	120	120	120	120	100	100	100	
	Wall Thickness, mm	4.78	5.56	6.35	7.14	8.74	9.53	11.13	11.13	14.27	18.26	21.44	25.4	27.79	30.96	29.36	32.54	38.89	

Description	End Conn.	Sch./Rating	Standard																	
Pipe Seamless	PE		ASME B36.10M	ASTM A106 Gr.B																2
Pipe Seamless	BE		ASME B36.10M							ASTM A106 Gr.B										2
Pipe	BE		ASME B36.10M							API 5L Gr.B Welded (LSAW) →										2,3
Elbow LR 90 Deg.	BW	As Pipe	ASME B16.9							ASTM A234 Gr. WPB										
Elbow LR 45 Deg.	BW	As Pipe	ASME B16.9							ASTM A234 Gr. WPB										
Elbow 90 Deg.	SW	6000#	ASME B16.11	ASTM A105N																
Elbow 45 Deg.	SW	6000#	ASME B16.11	ASTM A105N																
Equal Tee	BW	As Pipe	ASME B16.9							ASTM A234 Gr. WPB										
Reducing Tee	BW	As Pipe	ASME B16.9							ASTM A234 Gr. WPB										
Equal Tee	SW	6000#	ASME B16.11	ASTM A105N																
Reducing Tee	SW	6000#	ASME B16.11	ASTM A105N																
End Cap	BW	As Pipe	ASME B16.9							ASTM A234 Gr. WPB										
End Cap	SW	6000#	ASME B16.11	ASTM A105N																
End Cap	THR'D	6000#	ASME B16.11	ASTM A105N																
Eccentric Reducer	BW	As Pipe	ASME B16.9							ASTM A234 Gr. WPB										
Concentric Reducer	BW	As Pipe	ASME B16.9							ASTM A234 Gr. WPB										
Concentric Swage	BLE/PSE	As Pipe	MSS SP-95	ASTM A105N																
Eccentric Swage	BLE/PSE	As Pipe	MSS SP-95	ASTM A105N																
Concentric Swage	PBE	As Pipe	MSS SP-95	ASTM A105N																
Eccentric Swage	PBE	As Pipe	MSS SP-95	ASTM A105N																
Coupling - Full	SW	6000#	ASME B16.11	ASTM A105N																
Plug Hex Head	THR'D	6000#	ASME B16.11	ASTM A105N																1
Nipple, 100mm length	PBE	As Pipe	ASME B36.10M	ASTM A106 Gr. B																
Nipple, 100mm length	TBE	As Pipe	ASME B36.10M	ASTM A106 Gr. B																
Weldolet	BW	As Pipe	MSS SP-97							ASTM A105N										
Sockolet	SW	6000#	MSS SP-97	ASTM A105N																
Threadolet	THR'D	6000#	MSS SP-97	ASTM A105N																

APPENDIX 19

Maximum Allowable Working Pressure At Temperature										
ASME B16.5 - Material Group 1.1										
Deg.C	0	38	50	100	150	200				
kPa	15320	15320	15040	13980	13520	13140				
Bar	153.2	153.2	150.4	139.8	135.2	131.4				

Material : **Carbon Steel**
Rating : **ASME Rating 900**
Service: **Refer to Class index**
Corrosion Allow. : **3.0 mm**
Design Code : **ASME B31.3**

PIPING CLASS **DC1**

Văn bản này được xác thực tại https://eoffice.vietsov.com.vn với số định danh: 627/25-CV-XDM/NIPI

Description	End Conn.	Sch./Rating	Standard	Nominal Diameter, in: 1/2	3/4	1	1.1/2	2	2.1/2	3	4	6	8	10	12	14	16	18	20	24	Notes
Flange - Weld Neck	BW	1500# RTJ	ASME B16.5	ASTM A105N Bore to match pipe																	
Flange - Weld Neck	BW	900# RTJ	ASME B16.5							ASTM A105N Bore to match pipe											
Flange - Socket Weld	SW	1500# RTJ	ASME B16.5	ASTM A105N																	
Flange - Blind		1500# RTJ	ASME B16.5	ASTM A105N																	
Flange - Blind		900# RTJ	ASME B16.5							ASTM A105N											
Spectacle Blind		1500# RTJ	ASME B16.48	ASTM A516 Gr.70																	
Spectacle Blind		900# RTJ	ASME B16.48							ASTM A516 Gr.70											
Spade/ Spacer		900# RTJ	ASME B16.48									ASTM A516 Gr.70									
Gasket		1500# RTJ	ASME B16.20	← Gasket Soft Iron, Hardness 90 BHN, Electroplated Zinc Coated, Octagonal RTJ, Type R																	
Gasket		900# RTJ	ASME B16.20	Gasket Soft Iron, Hardness 90 BHN, Electroplated Zinc Coated, Octagonal RTJ, Type R																	
Stud bolts fully threaded			ASME B18.2.1/ B18.2.2	ASTM A193 Gr.B7/ A194 Gr.2H Sermagard Coated																	

APPENDIX 19

Maximum Allowable Working Pressure At Temperature									
ASME B16.5 - Material Group 1.1									
Deg.C	0	38	50	100	150	200			
kPa	15320	15320	15040	13980	13520	13140			
Bar	153.2	153.2	150.4	139.8	135.2	131.4			

Material :	**Carbon Steel**
Rating :	**ASME Rating 900**
Service:	**Refer to Class index**
Corrosion Allow. :	**3.0 mm**
Design Code :	**ASME B31.3**

PIPING CLASS **DC1**

Văn bản này được xác thực tại https://eoffice.vietsov.com.vn với số định danh: 627/25-CV-XDM/NIPI

			Nominal Diameter, in		1/2	3/4	1	1.1/2	2	2.1/2	3	4	6	8	10	12	14	16	18	20	24	Notes
Valve Code	Valve Type	Description	Rating	End Conn.																		
BA62AL	Ball Valves	Full Bore	6000 Psi / 1500#	SW ends.	Floating, Lever OP.																	4
BA66AL		Full Bore		SW x NPTF	Floating, Lever OP.																	4
BA61AL		Full Bore		NPTF ends.	Floating, Lever OP.																	4
BAE5BL		Full Bore	1500#	RTJ Flanged	Trunnion, Lever OP.																	4
BAD5BL		Full Bore	900#	RTJ Flanged	Trunnion, Lever OP. →																	4
BAD5BG		Full Bore	900#	RTJ Flanged								Trunnion, Gear OP.										4
BAE5DL		Reduced Bore	1500#	RTJ Flanged	Trunnion, Lever OP.																	4
BAD5DL		Reduced Bore	900#	RTJ Flanged	Trunnion, Lever OP. →																	4
BAD5DG		Reduced Bore	900#	RTJ Flanged								Trunnion, Gear OP.										4
GL62AH	Globe Valves		6000 Psi / 1500#	SW ends.	Rising Stem OS & Y, Handweel																	4
GLE5AH			1500#	RTJ Flanged	Rising Stem OS & Y, Handweel																	4
GLD5AH			900#	RTJ Flanged							← Rising Stem OS & Y, Handweel											4
GLD5AG			900#	RTJ Flanged								Rising Stem OS & Y, Gear OP										4
GA62AH	Gate Valves	Solid Wedge	6000 Psi / 1500#	SW ends.	Rising Stem OS & Y, Handweel																	4
GAE5AH		Solid Wedge	1500#	RTJ Flanged	Rising Stem OS & Y, Handweel																	4
GAD5HH		Flexible Wedge	900#	RTJ Flanged	Rising Stem OS & Y, Handweel →																	4
GAD5HG		Flexible Wedge	900#	RTJ Flanged									Rising Stem OS & Y, Gear OP.									4

Maximum Allowable Working Pressure At Temperature

ASME B16.5 - Material Group 1.1

Deg.C	0	38	50	100	150	200
kPa	15320	15320	15040	13980	13520	13140
Bar	153.2	153.2	150.4	139.8	135.2	131.4

Material : **Carbon Steel**
Rating : **ASME Rating 900**
Service: **Refer to Class index**
Corrosion Allow. : **3.0 mm**
Design Code : **ASME B31.3**

PIPING CLASS **DC1**

Sheet 3 of 5

APPENDIX 19

Văn bản này được xác thực tại https://eoffice.vietsov.com.vn với số định danh: 627/25-CV-XDM/NIPI

Valve Code	Valve Type	Description	Nominal Diameter, in / Rating	End Conn.	1/2	3/4	1	1.1/2	2	2.1/2	3	4	6	8	10	12	14	16	18	20	24	Notes
CH62AN	Check	Piston	6000 Psi / 1500#	SW ends.	Horizontal type																	4
CHE5AN	Valves	Piston	1500#	RTJ Flanged	Horizontal type																	4
CHE5BN		Swing	1500#	RTJ Flanged					← Horizontal & Vertical type													4
CHD5BN		Swing	900#	RTJ Flanged							Horizontal & Vertical type											4
CHE5CN		Wafer	1500#	RTJ Wafer					← Horizontal & Vertical type													4
CHD5CN		Wafer	900#	RTJ Wafer							Horizontal & Vertical type											4
NV62AT	Needle		6000 Psi / 1500#	SW ends.	Inside Screw, T-bar OP.																	4
NV66AT	Valves			SW x NPTF	Inside Screw, T-bar OP.																	4
NV61AT				NPTF ends.	Inside Screw, T-bar OP.																	4
PLE5CL	Plug	Regular-Pattern	1500#	RTJ Flanged					Lever OP.													4
PLD5CL	Valves	Regular-Pattern	900#	RTJ Flanged							Lever OP.											4
PLD5BG		Venturi-Pattern	900#	RTJ Flanged									Gear OP.									4
DBE9AL	Double Block and Bleed Valves		1500#	RTJ Flanged x NPTF	Floating, Lever OP. & Inside Screw, T-bar OP.																	4
DBE5AL			1500#	RTJ Flanged	Floating, Lever OP. & Inside Screw, T-bar OP.																	4
MVE9ET	Monoflange Valves	Integral Body	1500#	RTJ Flanged x NPTF ends.	Double Block & Bleed, T-bar OP.																	4

APPENDIX 19

Maximum Allowable Working Pressure At Temperature ASME B16.5 - Material Group 1.1										
Deg.C	0	38	50	100	150	200				
kPa	15320	15320	15040	13980	13520	13140				
Bar	153.2	153.2	150.4	139.8	135.2	131.4				

Material : **Carbon Steel**
Rating : **ASME Rating 900**
Service: **Refer to Class index**
Corrosion Allow. : **3.0 mm**
Design Code : **ASME B31.3**

PIPING CLASS **DC1**

Văn bản này được xác thực tại https://eoffice.vietsov.com.vn với số định danh: 627/25-CV-XDM/NIPI

BRANCH CONNECTIONS

1 Equal Tee BW.
2 Reducing Tee BW.
3 Equal Tee SW.
4 Reducing Tee SW.
5 Weldolet
6 Sockolet

HEADER SIZE (Nominal Diameter, in)	BRANCH SIZE 1/2	3/4	1	1.1/2	2	2.1/2	3	4	6	8	10	12	14	16	18	20	24	Notes
24	6	6	6	6	5	5	5	5	5	5	5	2	2	2	2	2	1	
20	6	6	6	6	5	5	5	5	5	5	2	2	2	2	2	1		
18	6	6	6	6	5	5	5	5	5	5	2	2	2	2	1			
16	6	6	6	6	5	5	5	5	5	2	2	2	2	1				
14	6	6	6	6	5	5	5	5	5	2	2	2	1					
12	6	6	6	6	5	5	5	5	2	2	2	1						
10	6	6	6	6	5	5	5	2	2	2	1							
8	6	6	6	6	5	5	5	2	2	1								
6	6	6	6	6	5	2	2	2	1									
4	6	6	6	6	2	2	2	1										
3	6	6	6	6	2	2	1											
2.1/2	6	6	6	6	2	1												
2	6	6	6	2	1													
1.1/2	4	4	4	3														
1	4	4	3															
3/4	4	3																
1/2	3																	

NOTES :

1. Screwed connections shall be NPT taper/ taper combination in accordance with ASME B1.20.1.
2. Pipe API 5L Gr. B seamless is an acceptable substitute for ASTM A106 Gr. B where specified.
3. Welded pipe type shall be longitudinal SAW, 100% Radiographed, Quality factors = 1 (refer to ASME B31.3 - Table A-1B)
4. Refer to data sheet for Manual Valves: VSP-NIPI-TYP-TS-PI1-DS

APPENDIX 19

Maximum Allowable Working Pressure At Temperature ASME B16.5 - Material Group 1.1									
Deg.C	0	38	50	100	150	200			
kPa	15320	15320	15040	13980	13520	13140			
Bar	153.2	153.2	150.4	139.8	135.2	131.4			

Material :	**Carbon Steel**
Rating :	**ASME Rating 900**
Service:	**Refer to Class index**
Corrosion Allow. :	**3.0 mm**
Design Code :	**ASME B31.3**

PIPING CLASS **DC1**

Văn bản này được xác thực tại https://eoffice.vietsov.com.vn với số định danh: 627/25-CV-XDM/NIPI

	Nominal Diameter, in	1/2	3/4	1	1.1/2	2	2.1/2	3	4	6	8	10	12	14	16	Notes
	ASME Schedule	160	160	160	160	160	160	160	120	120	120	120	120	120	120	
	Wall Thickness, mm	4.78	5.56	6.35	7.14	8.74	9.53	11.13	11.13	14.27	18.26	21.44	25.4	27.79	30.96	

Description	End Conn.	Sch./Rating	Standard													
Pipe Seamless	PE		ASME B36.10M	ASTM A106 Gr.B												2
Pipe Seamless	BE		ASME B36.10M							ASTM A106 Gr.B						2
Elbow LR 90 Deg.	BW	As Pipe	ASME B16.9							ASTM A234 Gr. WPB						
Elbow LR 45 Deg.	BW	As Pipe	ASME B16.9							ASTM A234 Gr. WPB						
Elbow 90 Deg.	SW	6000#	ASME B16.11	ASTM A105N												
Elbow 45 Deg.	SW	6000#	ASME B16.11	ASTM A105N												
Equal Tee	BW	As Pipe	ASME B16.9							ASTM A234 Gr. WPB						
Reducing Tee	BW	As Pipe	ASME B16.9							ASTM A234 Gr. WPB						
Equal Tee	SW	6000#	ASME B16.11	ASTM A105N												
Reducing Tee	SW	6000#	ASME B16.11	ASTM A105N												
End Cap	BW	As Pipe	ASME B16.9							ASTM A234 Gr. WPB						
End Cap	SW	6000#	ASME B16.11	ASTM A105N												
End Cap	THR'D	6000#	ASME B16.11	ASTM A105N												
Eccentric Reducer	BW	As Pipe	ASME B16.9							ASTM A234 Gr. WPB						
Concentric Reducer	BW	As Pipe	ASME B16.9							ASTM A234 Gr. WPB						
Concentric Swage	BLE/PSE	As Pipe	MSS SP-95	ASTM A105N												
Eccentric Swage	BLE/PSE	As Pipe	MSS SP-95	ASTM A105N												
Concentric Swage	PBE	As Pipe	MSS SP-95	ASTM A105N												
Eccentric Swage	PBE	As Pipe	MSS SP-95	ASTM A105N												
Coupling - Full	SW	6000#	ASME B16.11	ASTM A105N												
Plug Hex Head	THR'D	6000#	ASME B16.11	ASTM A105N												1
Nipple, 100mm length	PBE	As Pipe	ASME B36.10M	ASTM A106 Gr. B												
Nipple, 100mm length	TBE	As Pipe	ASME B36.10M	ASTM A106 Gr. B												
Weldolet	BW	As Pipe	MSS SP-97							ASTM A105N						
Sockolet	SW	6000#	MSS SP-97	ASTM A105N												
Threadolet	THR'D	6000#	MSS SP-97	ASTM A105N												

APPENDIX 20

Maximum Allowable Working Pressure At Temperature									
ASME B16.5 - Material Group 1.1									
Deg.C	0	38	50	100	150	200	250	300	325
kPa	15320	15320	15040	13980	13520	13140	12580	11950	11610
Bar	153.2	153.2	150.4	139.8	135.2	131.4	125.8	119.5	116.1

Material :	**Carbon Steel**
Rating :	**ASME Rating 900**
Service:	**Refer to Class index**
Corrosion Allow. :	**3.0 mm**
Design Code :	**ASME B31.3**

PIPING CLASS **DC2**

Văn bản này được xác thực tại https://eoffice.vietsov.com.vn với số định danh: 627/25-CV-XDM/NIPI

Description	End Conn.	Sch./Rating	Standard	Nominal Diameter, in: 1/2	3/4	1	1.1/2	2	2.1/2	3	4	6	8	10	12	14	16	Notes
Flange - Weld Neck	BW	1500# RTJ	ASME B16.5	ASTM A105N Bore to match pipe														
Flange - Weld Neck	BW	900# RTJ	ASME B16.5							ASTM A105N Bore to match pipe								
Flange - Socket Weld	SW	1500# RTJ	ASME B16.5	ASTM A105N														
Flange - Blind		1500# RTJ	ASME B16.5	ASTM A105N														
Flange - Blind		900# RTJ	ASME B16.5							ASTM A105N								
Spectacle Blind		1500# RTJ	ASME B16.48	ASTM A516 Gr.70														
Spectacle Blind		900# RTJ	ASME B16.48							ASTM A516 Gr.70								
Spade/ Spacer		900# RTJ	ASME B16.48												ASTM A516 Gr.70			
Gasket		1500# RTJ	ASME B16.20	← Gasket Soft Iron, Hardness 90 BHN, Electroplated Zinc Coated, Octagonal RTJ, Type R														
Gasket		900# RTJ	ASME B16.20							Gasket Soft Iron, Hardness 90 BHN, Electroplated Zinc Coated, Octagonal RTJ, Type R								
Stud bolts fully threaded			ASME B18.2.1/ B18.2.2	ASTM A193 Gr.B7/ A194 Gr.2H Sermagard Coated														

Maximum Allowable Working Pressure At Temperature
ASME B16.5 - Material Group 1.1

Deg.C	0	38	50	100	150	200	250	300	325
kPa	15320	15320	15040	13980	13520	13140	12580	11950	11610
Bar	153.2	153.2	150.4	139.8	135.2	131.4	125.8	119.5	116.1

Material : **Carbon Steel**
Rating : **ASME Rating 900**
Service: **Refer to Class index**
Corrosion Allow. : **3.0 mm**
Design Code : **ASME B31.3**

PIPING CLASS **DC2**

Sheet 2 of 5

APPENDIX 20

Văn bản này được xác thực tại https://eoffice.vietsov.com.vn với số định danh: 627/25-CV-XDM/NIPI

			Nominal Diameter, in		1/2	3/4	1	1.1/2	2	2.1/2	3	4	6	8	10	12	14	16	Notes
Valve Code	Valve Type	Description	Rating	End Conn.															
BA62AL	Ball Valves	Full Bore	6000 Psi / 1500#	SW ends.	Floating, Lever OP.														4
BA66AL		Full Bore		SW x NPTF	Floating, Lever OP.														4
BA61AL		Full Bore		NPTF ends.	Floating, Lever OP.														4
BAE5BL		Full Bore	1500#	RTJ Flanged	Trunnion, Lever OP.														4
BAD5BL		Full Bore	900#	RTJ Flanged	Trunnion, Lever OP. →														4
BAD5BG		Full Bore	900#	RTJ Flanged									Trunnion, Gear OP.						4
BAE5DL		Reduced Bore	1500#	RTJ Flanged	Trunnion, Lever OP.														4
BAD5DL		Reduced Bore	900#	RTJ Flanged	Trunnion, Lever OP. →														4
BAD5DG		Reduced Bore	900#	RTJ Flanged									Trunnion, Gear OP.						4
GL62AH	Globe Valves		6000 Psi / 1500#	SW ends.	Rising Stem OS & Y, Handweel														4
GLE5AH			1500#	RTJ Flanged	Rising Stem OS & Y, Handweel														4
GLD5AH			900#	RTJ Flanged							← Rising Stem OS & Y, Handweel								4
GLD5AG			900#	RTJ Flanged									Rising Stem OS & Y, Gear OP						4
GA62AH	Gate Valves	Solid Wedge	6000 Psi / 1500#	SW ends.	Rising Stem OS & Y, Handweel														4
GAE5AH		Solid Wedge	1500#	RTJ Flanged	Rising Stem OS & Y, Handweel														4
GAD5HH		Flexible Wedge	900#	RTJ Flanged	Rising Stem OS & Y, Handweel →														4
GAD5HG		Flexible Wedge	900#	RTJ Flanged									Rising Stem OS & Y, Gear OP.						4

APPENDIX 20

Maximum Allowable Working Pressure At Temperature									
ASME B16.5 - Material Group 1.1									
Deg.C	0	38	50	100	150	200	250	300	325
kPa	15320	15320	15040	13980	13520	13140	12580	11950	11610
Bar	153.2	153.2	150.4	139.8	135.2	131.4	125.8	119.5	116.1

Material :	**Carbon Steel**
Rating :	**ASME Rating 900**
Service:	**Refer to Class index**
Corrosion Allow. :	**3.0 mm**
Design Code :	**ASME B31.3**

PIPING CLASS **DC2**

Văn bản này được xác thực tại https://eoffice.vietsov.com.vn với số định danh: 627/25-CV-XDM/NIPI

			Nominal Diameter, in		1/2	3/4	1	1.1/2	2	2.1/2	3	4	6	8	10	12	14	16	Notes
Valve Code	Valve Type	Description	Rating	End Conn.															
CH62AN	Check Valves	Piston	6000 Psi / 1500#	SW ends.	Horizontal type														4
CHE5AN		Piston	1500#	RTJ Flanged	Horizontal type														4
CHE5BN		Swing	1500#	RTJ Flanged					← Horizontal & Vertical type										4
CHD5BN		Swing	900#	RTJ Flanged							Horizontal & Vertical type								4
CHE5CN		Wafer	1500#	RTJ Wafer					← Horizontal & Vertical type										4
CHD5CN		Wafer	900#	RTJ Wafer							Horizontal & Vertical type								4
NV62AT	Needle Valves		6000 Psi / 1500#	SW ends.	Inside Screw, T-bar OP.														4
NV66AT				SW x NPTF	Inside Screw, T-bar OP.														4
NV61AT				NPTF ends.	Inside Screw, T-bar OP.														4
PLE5CL	Plug Valves	Regular-Pattern	1500#	RTJ Flanged					Lever OP.										4
PLD5CL		Regular-Pattern	900#	RTJ Flanged							Lever OP.								4
PLD5BG		Venturi-Pattern	900#	RTJ Flanged									Gear OP.						4
DBE9AL	Double Block and Bleed Valves		1500#	RTJ Flanged x NPTF	Floating, Lever OP. & Inside Screw, T-bar OP.														4
DBE5AL			1500#	RTJ Flanged	Floating, Lever OP. & Inside Screw, T-bar OP.														4
MVE9ET	Monoflange Valves	Integral Body	1500#	RTJ Flanged x NPTF ends.	Double Block & Bleed, T-bar OP.														4

Maximum Allowable Working Pressure At Temperature

ASME B16.5 - Material Group 1.1

Deg.C	0	38	50	100	150	200	250	300	325
kPa	15320	15320	15040	13980	13520	13140	12580	11950	11610
Bar	153.2	153.2	150.4	139.8	135.2	131.4	125.8	119.5	116.1

Material :	**Carbon Steel**
Rating :	**ASME Rating 900**
Service:	**Refer to Class index**
Corrosion Allow. :	**3.0 mm**
Design Code :	**ASME B31.3**

PIPING CLASS **DC2**

APPENDIX 20

Văn bản này được xác thực tại https://eoffice.vietsov.com.vn với số định danh: 627/25-CV-XDM/NIPI

BRANCH CONNECTIONS

1 Equal Tee BW.
2 Reducing Tee BW.
3 Equal Tee SW.
4 Reducing Tee SW.
5 Weldolet
6 Sockolet

Nominal Diameter, in		BRANCH SIZE 1/2	3/4	1	1.1/2	2	2.1/2	3	4	6	8	10	12	14	16	Notes
	16	6	6	6	6	5	5	5	5	5	2	2	2	2	1	
	14	6	6	6	6	5	5	5	5	5	2	2	2	1		
H	12	6	6	6	6	5	5	5	5	2	2	2	1			
E	10	6	6	6	6	5	5	5	2	2	2	1				
A	8	6	6	6	6	5	5	5	2	2	1					
D	6	6	6	6	6	5	2	2	2	1						
E	4	6	6	6	6	2	2	2	1							
R	3	6	6	6	6	2	2	1								
	2.1/2	6	6	6	6	2	1									
S	2	6	6	6	2	1										
I	1.1/2	4	4	4	3											
Z	1	4	4	3												
E	3/4	4	3													
	1/2	3														

NOTES :

1. Screwed connections shall be NPT taper/ taper combination in accordance with ASME B1.20.1.
2. Pipe API 5L Gr. B seamless is an acceptable substitute for ASTM A106 Gr. B where specified.
3. Welded pipe type shall be longitudinal SAW, 100% Radiographed, Quality factors = 1 (refer to ASME B31.3 - Table A-1B)
4. Refer to data sheet for Manual Valves: VSP-NIPI-TYP-TS-PI1-DS

APPENDIX 20

Maximum Allowable Working Pressure At Temperature
ASME B16.5 - Material Group 1.1

Deg.C	0	38	50	100	150	200	250	300	325
kPa	15320	15320	15040	13980	13520	13140	12580	11950	11610
Bar	153.2	153.2	150.4	139.8	135.2	131.4	125.8	119.5	116.1

Material :	**Carbon Steel**
Rating :	**ASME Rating 900**
Service:	**Refer to Class index**
Corrosion Allow. :	**3.0 mm**
Design Code :	**ASME B31.3**

PIPING CLASS **DC2**

Văn bản này được xác thực tại https://eoffice.vietsov.com.vn với số định danh: 627/25-CV-XDM/NIPI

Description		End Conn.	Sch./Rating	Standard	Nominal Diameter, in	1/2	3/4	1	1.1/2	2	2.1/2	3	4	6	8	10	12	14	16	18	20	24	Notes
					ASME Schedule	160	160	160	160	160	160	160	120	120	120	120	120	120	120	100	100	100	
					Wall Thickness, mm	4.78	5.56	6.35	7.14	8.74	9.53	11.13	11.13	14.27	18.26	21.44	25.4	27.79	30.96	29.36	32.54	38.89	
Pipe	Seamless	PE		ASME B36.10M	ASTM A333 Gr.6																		
Pipe	Seamless	BE		ASME B36.10M	ASTM A333 Gr.6																		
Pipe	Seamless	BE		ASME B36.10M	ASTM A333 Gr.6 Welded (LSAW) →																		2
Elbow	LR 90 Deg.	BW	As Pipe	ASME B16.9	ASTM A420 WPL6																		
Elbow	LR 45 Deg.	BW	As Pipe	ASME B16.9	ASTM A420 WPL6																		
Elbow	90 Deg.	SW	6000#	ASME B16.11	ASTM A350 Gr.LF2 CL.1																		
Elbow	45 Deg.	SW	6000#	ASME B16.11	ASTM A350 Gr.LF2 CL.1																		
Equal Tee		BW	As Pipe	ASME B16.9	ASTM A420 WPL6																		
Reducing Tee		BW	As Pipe	ASME B16.9	ASTM A420 WPL6																		
Equal Tee		SW	6000#	ASME B16.11	ASTM A350 Gr.LF2 CL.1																		
Reducing Tee		SW	6000#	ASME B16.11	ASTM A350 Gr.LF2 CL.1																		
End Cap		BW	As Pipe	ASME B16.9	ASTM A420 WPL6																		
End Cap		SW	6000#	ASME B16.11	ASTM A350 Gr.LF2 CL.1																		
End Cap		THR'D	6000#	ASME B16.11	ASTM A350 Gr.LF2 CL.1																		
Eccentric Reducer		BW	As Pipe	ASME B16.9	ASTM A420 WPL6																		
Concentric Reducer		BW	As Pipe	ASME B16.9	ASTM A420 WPL6																		
Concentric Swage		BLE/PSE	As Pipe	MSS SP-95	ASTM A350 Gr.LF2 CL.1																		
Eccentric Swage		BLE/PSE	As Pipe	MSS SP-95	ASTM A350 Gr.LF2 CL.1																		
Concentric Swage		PBE	As Pipe	MSS SP-95	ASTM A350 Gr.LF2 CL.1																		
Eccentric Swage		PBE	As Pipe	MSS SP-95	ASTM A350 Gr.LF2 CL.1																		
Coupling - Full		SW	6000#	ASME B16.11	ASTM A350 Gr.LF2 CL.1																		
Plug Hex Head		THR'D	6000#	ASME B16.11	ASTM A350 Gr.LF2 CL.1																		1
Nipple, 100mm length		PBE	As Pipe	ASME B36.10M	ASTM A106 Gr. B																		
Nipple, 100mm length		TBE	As Pipe	ASME B36.10M	ASTM A106 Gr. B																		
Weldolet		BW	As Pipe	MSS SP-97	ASTM A350 Gr.LF2 CL.1																		
Sockolet		SW	6000#	MSS SP-97	ASTM A350 Gr.LF2 CL.1																		
Threadolet		THR'D	6000#	MSS SP-97	ASTM A350 Gr.LF2 CL.1																		

APPENDIX 21

Maximum Allowable Working Pressure At Temperature										
ASME B16.5 - Material Group 1.1										
Deg.C	0	38	50	100	150	200				
kPa	15320	15320	15040	13980	13520	13140				
Bar	153.2	153.2	150.4	139.8	135.2	131.4				

Material :	**Carbon Steel Low Temp.**
Rating :	**ASME Rating 900**
Service:	**Refer to Class index**
Corrosion Allow. :	**3.0 mm**
Design Code :	**ASME B31.3**

PIPING CLASS **DC6**

Văn bản này được xác thực tại https://eoffice.vietsov.com.vn với số định danh: 627/25-CV-XDM/NIPI

Description	End Conn.	Sch./Rating	Standard	Nominal Diameter, in: 1/2	3/4	1	1.1/2	2	2.1/2	3	4	6	8	10	12	14	16	18	20	24	Notes
Flange - Weld Neck	BW	1500# RTJ	ASME B16.5					← ASTM A350 Gr.LF2 CL.1 Bore to match pipe													
Flange - Weld Neck	BW	900# RTJ	ASME B16.5							ASTM A350 Gr.LF2 CL.1 Bore to match pipe											
Flange - Socket Weld	SW	1500# RTJ	ASME B16.5	ASTM A350 Gr.LF2 CL.1																	
Flange - Blind		1500# RTJ	ASME B16.5	ASTM A350 Gr.LF2 CL.1																	
Flange - Blind		900# RTJ	ASME B16.5							ASTM A350 Gr.LF2 CL.1											
Spectacle Blind		1500# RTJ	ASME B16.48	ASTM A516 Gr.70																	
Spectacle Blind		900# RTJ	ASME B16.48							ASTM A516 Gr.70											
Spade/ Spacer		900# RTJ	ASME B16.48												ASTM A516 Gr.70						
Gasket		1500# RTJ	ASME B16.20					← Gasket Soft Iron, Hardness 90 BHN, Electroplated Zinc Coated, Octagonal RTJ, Type R													
Gasket		900# RTJ	ASME B16.20							Gasket Soft Iron, Hardness 90 BHN, Electroplated Zinc Coated, Octagonal RTJ, Type R											
Stud bolts fully threaded			ASME B18.2.1/ B18.2.2	ASTM A320 Gr.L7 / ASTM A194 Gr.4L Sermagard Coated																	

Maximum Allowable Working Pressure At Temperature

ASME B16.5 - Material Group 1.1

Deg.C	0	38	50	100	150	200
kPa	15320	15320	15040	13980	13520	13140
Bar	153.2	153.2	150.4	139.8	135.2	131.4

Material :	**Carbon Steel Low Temp.**
Rating :	**ASME Rating 900**
Service:	**Refer to Class index**
Corrosion Allow. :	**3.0 mm**
Design Code :	**ASME B31.3**

PIPING CLASS **DC6**

Sheet 2 of 5

APPENDIX 21

Văn bản này được xác thực tại https://eoffice.vietsov.com.vn với số định danh: 627/25-CV-XDM/NIPI

			Nominal Diameter, in		1/2	3/4	1	1.1/2	2	2.1/2	3	4	6	8	10	12	14	16	18	20	24	Notes
Valve Code	Valve Type	Description	Rating	End Conn.																		
BA62IL	Ball Valves	Full Bore	6000 Psi / 1500#	SW ends.	Floating, Lever OP.																	3
BA66IL		Full Bore		SW x NPTF	Floating, Lever OP.																	3
BA61IL		Full Bore		NPTF ends.	Floating, Lever OP.																	
																						3
BAE5JL		Full Bore	1500#	RTJ Flanged	Trunnion, Lever OP.																	3
BAD5JL		Full Bore	900#	RTJ Flanged	Trunnion, Lever OP. →																	3
BAD5JG		Full Bore	900#	RTJ Flanged								Trunnion, Gear OP.										3
BAE5LL		Reduced Bore	1500#	RTJ Flanged	Trunnion, Lever OP.																	3
BAD5LL		Reduced Bore	900#	RTJ Flanged	Trunnion, Lever OP. →																	3
BAD5LG		Reduced Bore	900#	RTJ Flanged								Trunnion, Gear OP.										3
																						3
GL62CH	Globe Valves		6000 Psi / 1500#	SW ends.	Rising Stem OS & Y, Handweel																	3
GLE5CH			1500#	RTJ Flanged	Rising Stem OS & Y, Handweel																	3
GLD5CH			900#	RTJ Flanged							←	Rising Stem OS & Y, Handweel										3
GLD5CG			900#	RTJ Flanged								Rising Stem OS & Y, Gear OP										3
																						3
GA62CH	Gate Valves	Solid Wedge	6000 Psi / 1500#	SW ends.	Rising Stem OS & Y, Handweel																	3
GAE5CH		Solid Wedge	1500#	RTJ Flanged	Rising Stem OS & Y, Handweel																	3
GAD5IH		Flexible Wedge	900#	RTJ Flanged	Rising Stem OS & Y, Handweel →																	3
GAD5IG		Flexible Wedge	900#	RTJ Flanged									Rising Stem OS & Y, Gear OP.									3

Maximum Allowable Working Pressure At Temperature										
ASME B16.5 - Material Group 1.1										
Deg.C	0	38	50	100	150	200				
kPa	15320	15320	15040	13980	13520	13140				
Bar	153.2	153.2	150.4	139.8	135.2	131.4				

Material :	**Carbon Steel Low Temp.**
Rating :	**ASME Rating 900**
Service:	**Refer to Class index**
Corrosion Allow. :	**3.0 mm**
Design Code :	**ASME B31.3**

PIPING CLASS **DC6**

APPENDIX 21

Văn bản này được xác thực tại https://eoffice.vietsov.com.vn với số định danh: 627/25-CV-XDM/NIPI

			Nominal Diameter, in		1/2	3/4	1	1.1/2	2	2.1/2	3	4	6	8	10	12	14	16	18	20	24	Notes
Valve Code	Valve Type	Description	Rating	End Conn.																		
CH62GN	Check	Piston	6000 Psi / 1500#	SW ends.	Horizontal type																	3
CHE5GN	Valves	Piston	1500#	RTJ Flanged	Horizontal type																	3
CHE5HN		Swing	1500#	RTJ Flanged					←	Horizontal & Vertical type												3
CHD5HN		Swing	900#	RTJ Flanged						Horizontal & Vertical type												3
CHE5IN		Wafer	1500#	RTJ Wafer					←	Horizontal & Vertical type												3
CHD5IN		Wafer	900#	RTJ Wafer						Horizontal & Vertical type												3
NV62CT	Needle		6000 Psi / 1500#	SW ends.	Inside Screw, T-bar OP.																	3
NV66CT	Valves			SW x NPTF	Inside Screw, T-bar OP.																	3
NV61CT				NPTF ends.	Inside Screw, T-bar OP.																	3
PLE5IL	Plug	Regular-Pattern	1500#	RTJ Flanged					Lever OP.													3
PLD5IL	Valves	Regular-Pattern	900#	RTJ Flanged							Lever OP.											3
PLD5HG		Venturi-Pattern	900#	RTJ Flanged									Gear OP.									3
DBE9CL	Double Block and Bleed Valves		1500#	RTJ Flanged x NPTF	Floating, Lever OP. & Inside Screw, T-bar OP.																	3
DBE5CL			1500#	RTJ Flanged	Floating, Lever OP. & Inside Screw, T-bar OP.																	3
MVE9GT	Monoflange Valves	Integral Body	1500#	RTJ Flanged x NPTF ends.	Double Block & Bleed, T-bar OP.																	3

Maximum Allowable Working Pressure At Temperature

ASME B16.5 - Material Group 1.1

Deg.C	0	38	50	100	150	200
kPa	15320	15320	15040	13980	13520	13140
Bar	153.2	153.2	150.4	139.8	135.2	131.4

Material : **Carbon Steel Low Temp.**
Rating : **ASME Rating 900**
Service: **Refer to Class index**
Corrosion Allow. : **3.0 mm**
Design Code : **ASME B31.3**

PIPING CLASS **DC6**

APPENDIX 21

Văn bản này được xác thực tại https://eoffice.vietsov.com.vn với số định danh: 627/25-CV-XDM/NIPI

BRANCH CONNECTIONS

1 Equal Tee BW.
2 Reducing Tee BW.
3 Equal Tee SW.
4 Reducing Tee SW.
5 Weldolet
6 Sockolet

Nominal Diameter, in		BRANCH SIZE																	Notes
	24	6	6	6	6	5	5	5	5	5	5	5	2	2	2	2	2	1	
	20	6	6	6	6	5	5	5	5	5	5	2	2	2	2	2	1		
	18	6	6	6	6	5	5	5	5	5	5	2	2	2	2	1			
	16	6	6	6	6	5	5	5	5	5	2	2	2	2	1				
	14	6	6	6	6	5	5	5	5	5	2	2	2	1					
H	12	6	6	6	6	5	5	5	5	2	2	2	1						
E	10	6	6	6	6	5	5	5	2	2	2	1							
A	8	6	6	6	6	5	5	5	2	2	1								
D	6	6	6	6	6	5	2	2	2	1									
E	4	6	6	6	6	2	2	2	1										
R	3	6	6	6	6	2	2	1											
	2.1/2	6	6	6	6	2	1												
S	2	6	6	6	2	1													
I	1.1/2	4	4	4	3														
Z	1	4	4	3															
E	3/4	4	3																
	1/2	3																	

NOTES :

1. Screwed connections shall be NPT taper/ taper combination in accordance with ASME B1.20.1.
2. Welded pipe type shall be longitudinal SAW, 100% Radiographed, Quality factors = 1 (refer to ASME B31.3 - Table A-1B)
3. Refer to data sheet for Manual Valves: VSP-NIPI-TYP-TS-PI1-DS

APPENDIX 21

Maximum Allowable Working Pressure At Temperature									
ASME B16.5 - Material Group 1.1									
Deg.C	0	38	50	100	150	200			
kPa	15320	15320	15040	13980	13520	13140			
Bar	153.2	153.2	150.4	139.8	135.2	131.4			

Material :	**Carbon Steel Low Temp.**
Rating :	**ASME Rating 900**
Service:	**Refer to Class index**
Corrosion Allow. :	**3.0 mm**
Design Code :	**ASME B31.3**

PIPING CLASS **DC6**

Văn bản này được xác thực tại https://eoffice.vietsov.com.vn với số định danh: 627/25-CV-XDM/NIPI

Description	End Conn.	Sch./Rating	Standard	Nominal Diameter, in	1/2	3/4	1	1.1/2	2	2.1/2	3	4	6	8	10	12	14	16	Notes
				ASME Schedule	80S	80S	80S	80S	80S	80S	80S	80S	80S	80S	80	80	80	80	
				Wall Thickness, mm	3.73	3.91	4.55	5.08	5.54	7.01	7.62	8.56	10.97	12.7	15.09	17.48	19.05	21.44	
Pipe Seamless	PE		ASME B36.19M		ASTM A312 Gr.TP316														
Pipe Seamless	BE		ASME B36.19M						ASTM A312 Gr.TP316										
Elbow LR 90 Deg.	BW	As Pipe	ASME B16.9										ASTM A403-WP316						
Elbow LR 45 Deg.	BW	As Pipe	ASME B16.9										ASTM A403-WP316						
Elbow 90 Deg.	SW	6000#	ASME B16.11		ASTM A182-F316														
Elbow 45 Deg.	SW	6000#	ASME B16.11		ASTM A182-F316														
Equal Tee	BW	As Pipe	ASME B16.9										ASTM A403-WP316						
Reducing Tee	BW	As Pipe	ASME B16.9										ASTM A403-WP316						
Equal Tee	SW	6000#	ASME B16.11		ASTM A182-F316														
Reducing Tee	SW	6000#	ASME B16.11		ASTM A182-F316														
End Cap	BW	As Pipe	ASME B16.9										ASTM A403-WP316						
End Cap	SW	6000#	ASME B16.11		ASTM A182-F316														
End Cap	THR'D	6000#	ASME B16.11		ASTM A182-F316														
Eccentric Reducer	BW	As Pipe	ASME B16.9										ASTM A403-WP316						
Concentric Reducer	BW	As Pipe	ASME B16.9										ASTM A403-WP316						
Concentric Swage	BLE/PSE	As Pipe	MSS SP-95		ASTM A182-F316														
Eccentric Swage	BLE/PSE	As Pipe	MSS SP-95		ASTM A182-F316														
Concentric Swage	PBE	As Pipe	MSS SP-95		ASTM A182-F316														
Eccentric Swage	PBE	As Pipe	MSS SP-95		ASTM A182-F316														
Coupling - Full	SW	6000#	ASME B16.11		ASTM A182-F316														
Plug Hex Head	THR'D	6000#	ASME B16.11		ASTM A182-F316														
Nipple, 100mm length	PBE	As Pipe	ASME B36.10M		ASTM A312 Gr.TP316														
Nipple, 100mm length	TBE	As Pipe	ASME B36.10M		ASTM A312 Gr.TP316														
Weldolet	BW	As Pipe	MSS SP-97										ASTM A182-F316						
Sockolet	SW	6000#	MSS SP-97		ASTM A182-F316														
Threadolet	THR'D	6000#	MSS SP-97		ASTM A182-F316														

APPENDIX 22

Maximum Allowable Working Pressure At Temperature										
ASME B16.5 - Material Group 2.2										
Deg.C	-29	38	50	100	150	200				
kPa	14890	14890	14430	12660	11550	10700				
Bar	148.9	148.9	144.3	126.6	115.5	107				

Material :	**Austenitic Stainless Steel**
Rating :	**ASME Rating 900**
Service:	**Refer to Class index**
Corrosion Allow. :	**0.0 mm**
Design Code :	**ASME B31.3**

PIPING CLASS **DS1**

Văn bản này được xác thực tại https://eoffice.vietsov.com.vn với số định danh: 627/25-CV-XDM/NIPI

Description	End Conn.	Sch./Rating	Standard	Nominal Diameter, in: 1/2	3/4	1	1.1/2	2	2.1/2	3	4	6	8	10	12	14	16	Notes
Flange - Weld Neck	BW	1500# RTJ	ASME B16.5	ASTM A182-F316 Bore to match pipe														
Flange - Weld Neck	BW	900# RTJ	ASME B16.5							ASTM A182-F316 Bore to match pipe								
Flange - Socket Weld	SW	1500# RTJ	ASME B16.5	ASTM A182-F316														
Flange - Blind		1500# RTJ	ASME B16.5	ASTM A182-F316														
Flange - Blind		900# RTJ	ASME B16.5							ASTM A182-F316								
Spectacle Blind		1500# RTJ	ASME B16.48	ASTM A240-TP316														
Spectacle Blind		900# RTJ	ASME B16.48							ASTM A240-TP316								
Spade/ Spacer		900# RTJ	ASME B16.48												ASTM A240-TP316			
Gasket		1500# RTJ	ASME B16.20	← Gasket Soft Iron, Hardness 90 BHN, Electroplated Zinc Coated, Octagonal RTJ, Type R														
Gasket		900# RTJ	ASME B16.20							Gasket Soft Iron, Hardness 90 BHN, Electroplated Zinc Coated, Octagonal RTJ, Type R								
Stud bolts fully threaded			ASME B18.2.1/ B18.2.2	ASTM A193 Gr.B8M/ A194 Gr.8M Sermagard Coated														

Maximum Allowable Working Pressure At Temperature
ASME B16.5 - Material Group 2.2

Deg.C	-29	38	50	100	150	200
kPa	14890	14890	14430	12660	11550	10700
Bar	148.9	148.9	144.3	126.6	115.5	107

Material :	**Austenitic Stainless Steel**
Rating :	**ASME Rating 900**
Service:	**Refer to Class index**
Corrosion Allow. :	**0.0 mm**
Design Code :	**ASME B31.3**

PIPING CLASS **DS1**

Sheet 2 of 5

APPENDIX 22

Văn bản này được xác thực tại https://eoffice.vietsov.com.vn với số định danh: 627/25-CV-XDM/NIPI

			Nominal Diameter, in		1/2	3/4	1	1.1/2	2	2.1/2	3	4	6	8	10	12	14	16	Notes
Valve Code	Valve Type	Description	Rating	End Conn.															
BA62ML	Ball Valves	Full Bore	6000 Psi / 1500#	SW ends.	Floating, Lever OP.														2
BA66ML		Full Bore		SW x NPTF	Floating, Lever OP.														2
BA61ML		Full Bore		NPTF ends.	Floating, Lever OP.														2
BAE5NL		Full Bore	1500#	RTJ Flanged	Trunnion, Lever OP.														2
BAD5NL		Full Bore	900#	RTJ Flanged	Trunnion, Lever OP. →														2
BAD5NG		Full Bore	900#	RTJ Flanged								Trunnion, Gear OP.							2
BAE5PL		Reduced Bore	1500#	RTJ Flanged	Trunnion, Lever OP.														2
BAD5PL		Reduced Bore	900#	RTJ Flanged	Trunnion, Lever OP. →														2
BAD5PG		Reduced Bore	900#	RTJ Flanged								Trunnion, Gear OP.							2
GL62DH	Globe Valves		6000 Psi / 1500#	SW ends.	Rising Stem OS & Y, Handweel														2
GLE5DH			1500#	RTJ Flanged	Rising Stem OS & Y, Handweel														2
GLD5DH			900#	RTJ Flanged							← Rising Stem OS & Y, Handweel								2
GLD5DG			900#	RTJ Flanged								Rising Stem OS & Y, Gear OP							2
GA62DH	Gate Valves	Solid Wedge	6000 Psi / 1500#	SW ends.	Rising Stem OS & Y, Handweel														2
GAE5DH		Solid Wedge	1500#	RTJ Flanged	Rising Stem OS & Y, Handweel														2
GAD5JH		Flexible Wedge	900#	RTJ Flanged	Rising Stem OS & Y, Handweel →														2
GAD5JG		Flexible Wedge	900#	RTJ Flanged									Rising Stem OS & Y, Gear OP.						2

Maximum Allowable Working Pressure At Temperature
ASME B16.5 - Material Group 2.2

Deg.C	-29	38	50	100	150	200
kPa	14890	14890	14430	12660	11550	10700
Bar	148.9	148.9	144.3	126.6	115.5	107

Material : **Austenitic Stainless Steel**
Rating : **ASME Rating 900**
Service: **Refer to Class index**
Corrosion Allow. : **0.0 mm**
Design Code : **ASME B31.3**

PIPING CLASS **DS1**

APPENDIX 22

Văn bản này được xác thực tại https://eoffice.vietsov.com.vn với số định danh: 627/25-CV-XDM/NIPI

			Nominal Diameter, in		1/2	3/4	1	1.1/2	2	2.1/2	3	4	6	8	10	12	14	16	Notes
Valve Code	Valve Type	Description	Rating	End Conn.															
CH62JN	Check Valves	Piston	6000 Psi / 1500#	SW ends.	Horizontal type														2
CHE5JN		Piston	1500#	RTJ Flanged	Horizontal type														2
CHE5KN		Swing	1500#	RTJ Flanged					← Horizontal & Vertical type										2
CHD5KN		Swing	900#	RTJ Flanged							Horizontal & Vertical type								2
CHE5LN		Wafer	1500#	RTJ Wafer					← Horizontal & Vertical type										2
CHD5LN		Wafer	900#	RTJ Wafer							Horizontal & Vertical type								2
NV62DT	Needle Valves		6000 Psi / 1500#	SW ends.	Inside Screw, T-bar OP.														2
NV66DT				SW x NPTF	Inside Screw, T-bar OP.														2
NV61DT				NPTF ends.	Inside Screw, T-bar OP.														2
PLE5LL	Plug Valves	Regular-Pattern	1500#	RTJ Flanged					Lever OP.										2
PLD5LL		Regular-Pattern	900#	RTJ Flanged							Lever OP.								2
PLD5KG		Venturi-Pattern	900#	RTJ Flanged									Gear OP.						2
DBE9DL	Double Block and Bleed Valves		1500#	RTJ Flanged x NPTF	Floating, Lever OP. & Inside Screw, T-bar OP.														2
DBE5DL			1500#	RTJ Flanged	Floating, Lever OP. & Inside Screw, T-bar OP.														2
MVE9HT	Monoflange Valves	Integral Body	1500#	RTJ Flanged x NPTF ends.	Double Block & Bleed, T-bar OP.														2

Maximum Allowable Working Pressure At Temperature

ASME B16.5 - Material Group 2.2

Deg.C	-29	38	50	100	150	200
kPa	14890	14890	14430	12660	11550	10700
Bar	148.9	148.9	144.3	126.6	115.5	107

Material :	**Austenitic Stainless Steel**
Rating :	**ASME Rating 900**
Service:	**Refer to Class index**
Corrosion Allow. :	**0.0 mm**
Design Code :	**ASME B31.3**

PIPING CLASS **DS1**

APPENDIX 22

Văn bản này được xác thực tại https://eoffice.vietsov.com.vn với số định danh: 627/25-CV-XDM/NIPI

BRANCH CONNECTIONS

1 Equal Tee BW.
2 Reducing Tee BW.
3 Equal Tee SW.
4 Reducing Tee SW.
5 Weldolet
6 Sockolet

Nominal Diameter, in		BRANCH SIZE 1/2	3/4	1	1.1/2	2	2.1/2	3	4	6	8	10	12	14	16	Notes
	16	6	6	6	6	5	5	5	5	5	2	2	2	2	1	
	14	6	6	6	6	5	5	5	5	5	2	2	2	1		
H	12	6	6	6	6	5	5	5	5	2	2	2	1			
E	10	6	6	6	6	5	5	5	2	2	2	1				
A	8	6	6	6	6	5	5	5	2	2	1					
D	6	6	6	6	6	5	2	2	2	1						
E	4	6	6	6	6	2	2	2	1							
R	3	6	6	6	6	2	2	1								
	2.1/2	6	6	6	6	2	1									
S	2	6	6	6	2	1										
I	1.1/2	4	4	4	3											
Z	1	4	4	3												
E	3/4	4	3													
	1/2	3														

NOTES :

1. Screwed connections shall be NPT taper/ taper combination in accordance with ASME B1.20.1.
2. Refer to data sheet for Manual Valves: VSP-NIPI-TYP-TS-PI1-DS

APPENDIX 22

Maximum Allowable Working Pressure At Temperature ASME B16.5 - Material Group 2.2									
Deg.C	-29	38	50	100	150	200			
kPa	14890	14890	14430	12660	11550	10700			
Bar	148.9	148.9	144.3	126.6	115.5	107			

Material :	**Austenitic Stainless Steel**
Rating :	**ASME Rating 900**
Service:	**Refer to Class index**
Corrosion Allow. :	**0.0 mm**
Design Code :	**ASME B31.3**

PIPING CLASS **DS1**

Văn bản này được xác thực tại https://eoffice.vietsov.com.vn với số định danh: 627/25-CV-XDM/NIPI

Description	End Conn.	Sch./Rating	Standard	Nominal Diameter, in	1/2	3/4	1	1.1/2	2	2.1/2	3	4	6	8	10	12	14	16	Notes
				ASME Schedule	160	160	160	160	160	160	80	80	80	80	80	80	80	80	
				Wall Thickness, mm	4.78	5.56	6.35	7.14	8.74	9.53	7.62	8.56	10.97	12.7	15.09	17.48	19.05	21.44	
Pipe Seamless	PE		ASME B36.10M		API 5L Gr.X60														
Pipe Seamless	BE		ASME B36.10M						API 5L Gr.X60										
Elbow LR 90 Deg.	BW	As Pipe	ASME B16.9						ASTM A860-WPHY60										
Elbow LR 45 Deg.	BW	As Pipe	ASME B16.9						ASTM A860-WPHY60										
Elbow 90 Deg.	SW	6000#	ASME B16.11		ASTM A694-Gr.F60														
Elbow 45 Deg.	SW	6000#	ASME B16.11		ASTM A694-Gr.F60														
Equal Tee	BW	As Pipe	ASME B16.9						ASTM A860-WPHY60										
Reducing Tee	BW	As Pipe	ASME B16.9						ASTM A860-WPHY60										
Equal Tee	SW	6000#	ASME B16.11		ASTM A694-Gr.F60														
Reducing Tee	SW	6000#	ASME B16.11		ASTM A694-Gr.F60														
End Cap	BW	As Pipe	ASME B16.9						ASTM A860-WPHY60										
End Cap	SW	6000#	ASME B16.11		ASTM A694-Gr.F60														
End Cap	THR'D	6000#	ASME B16.11		ASTM A694-Gr.F60														
Eccentric Reducer	BW	As Pipe	ASME B16.9						ASTM A860-WPHY60										
Concentric Reducer	BW	As Pipe	ASME B16.9						ASTM A860-WPHY60										
Concentric Swage	BLE/PSE	As Pipe	MSS SP-95		ASTM A694-Gr.F60														
Eccentric Swage	BLE/PSE	As Pipe	MSS SP-95		ASTM A694-Gr.F60														
Concentric Swage	PBE	As Pipe	MSS SP-95		ASTM A694-Gr.F60														
Eccentric Swage	PBE	As Pipe	MSS SP-95		ASTM A694-Gr.F60														
Coupling - Full	SW	6000#	ASME B16.11		ASTM A694-Gr.F60														
Plug Hex Head	THR'D	6000#	ASME B16.11		ASTM A694-Gr.F60														1
Nipple, 100mm length	PBE	As Pipe	ASME B36.10M		API 5L Gr.X60														
Nipple, 100mm length	TBE	As Pipe	ASME B36.10M		API 5L Gr.X60														
Weldolet	BW	As Pipe	MSS SP-97						ASTM A860-WPHY60										
Sockolet	SW	6000#	MSS SP-97		ASTM A694-Gr.F60														
Threadolet	THR'D	6000#	MSS SP-97		ASTM A694-Gr.F60														

APPENDIX 23

Maximum Allowable Working Pressure At Temperature									
ASME B16.5 - Material Group 1.1									
Deg.C	0	38	50	100	150	200			
kPa	15320	15320	15040	13980	13520	13140			
Bar	153.2	153.2	150.4	139.8	135.2	131.4			

Material :	**Carbon Steel High Strength**
Rating :	**ASME Rating 900**
Service:	**Refer to Class index**
Corrosion Allow. :	**3.0 mm**
Design Code :	**ASME B31.8**

PIPING CLASS **DX1**

Văn bản này được xác thực tại https://eoffice.vietsov.com.vn với số định danh: 627/25-CV-XDM/NIPI

Description	End Conn.	Sch./Rating	Standard	Nominal Diameter, in: 1/2	3/4	1	1.1/2	2	2.1/2	3	4	6	8	10	12	14	16	Notes
Flange - Weld Neck	BW	1500# RTJ	ASME B16.5	ASTM A694-Gr.F60 Bore to match pipe														
Flange - Weld Neck	BW	900# RTJ	ASME B16.5							ASTM A694-Gr.F60 Bore to match pipe								
Flange - Socket Weld	SW	1500# RTJ	ASME B16.5	ASTM A694-Gr.F60														
Flange - Blind		1500# RTJ	ASME B16.5	ASTM A694-Gr.F60														
Flange - Blind		900# RTJ	ASME B16.5							ASTM A694-Gr.F60								
Spectacle Blind		1500# RTJ	ASME B16.48	ASTM A694-Gr.F60														
Spectacle Blind		900# RTJ	ASME B16.48							ASTM A694-Gr.F60								
Spade/ Spacer		900# RTJ	ASME B16.48												ASTM A694-Gr.F60			
Gasket		1500# RTJ	ASME B16.20	← Gasket Soft Iron, Hardness 90 BHN, Electroplated Zinc Coated, Octagonal RTJ, Type R														
Gasket		900# RTJ	ASME B16.20							Gasket Soft Iron, Hardness 90 BHN, Electroplated Zinc Coated, Octagonal RTJ, Type R								
Stud bolts fully threaded			ASME B18.2.1/ B18.2.2	ASTM A193 Gr.B7/ A194 Gr.2H Sermagard Coated														

Maximum Allowable Working Pressure At Temperature

ASME B16.5 - Material Group 1.1

Deg.C	0	38	50	100	150	200
kPa	15320	15320	15040	13980	13520	13140
Bar	153.2	153.2	150.4	139.8	135.2	131.4

Material :	**Carbon Steel High Strength**
Rating :	**ASME Rating 900**
Service:	**Refer to Class index**
Corrosion Allow. :	**3.0 mm**
Design Code :	**ASME B31.8**

PIPING CLASS **DX1**

Sheet 2 of 5

APPENDIX 23

Văn bản này được xác thực tại https://eoffice.vietsov.com.vn với số định danh: 627/25-CV-XDM/NIPI

			Nominal Diameter, in		1/2	3/4	1	1.1/2	2	2.1/2	3	4	6	8	10	12	14	16	Notes
Valve Code	Valve Type	Description	Rating	End Conn.															
BA621L	Ball Valves	Full Bore	6000 Psi / 1500#	SW ends.	Floating, Lever OP.														3
BA661L		Full Bore		SW x NPTF	Floating, Lever OP.														3
BA611L		Full Bore		NPTF ends.	Floating, Lever OP.														3
BAE5UL		Full Bore	1500#	RTJ Flanged	Trunnion, Lever OP.														3
BAD5UL		Full Bore	900#	RTJ Flanged	Trunnion, Lever OP. →														3
BAD5UG		Full Bore	900#	RTJ Flanged								Trunnion, Gear OP.							3
BAE5VL		Reduced Bore	1500#	RTJ Flanged	Trunnion, Lever OP.														3
BAD5VL		Reduced Bore	900#	RTJ Flanged	Trunnion, Lever OP. →														3
BAD5VG		Reduced Bore	900#	RTJ Flanged								Trunnion, Gear OP.							3
GL62FH	Globe Valves		6000 Psi / 1500#	SW ends.	Rising Stem OS & Y, Handweel														3
GLE5FH			1500#	RTJ Flanged	Rising Stem OS & Y, Handweel														3
GLD5FH			900#	RTJ Flanged							← Rising Stem OS & Y, Handweel								3
GLD5FG			900#	RTJ Flanged								Rising Stem OS & Y, Gear OP							3
GA62FH	Gate Valves	Solid Wedge	6000 Psi / 1500#	SW ends.	Rising Stem OS & Y, Handweel														3
GAE5FH		Solid Wedge	1500#	RTJ Flanged	Rising Stem OS & Y, Handweel														3
GAD5LH		Flexible Wedge	900#	RTJ Flanged	Rising Stem OS & Y, Handweel →														3
GAD5LG		Flexible Wedge	900#	RTJ Flanged									Rising Stem OS & Y, Gear OP.						3

Maximum Allowable Working Pressure At Temperature

ASME B16.5 - Material Group 1.1

Deg.C	0	38	50	100	150	200
kPa	15320	15320	15040	13980	13520	13140
Bar	153.2	153.2	150.4	139.8	135.2	131.4

Material : **Carbon Steel High Strength**
Rating : **ASME Rating 900**
Service: **Refer to Class index**
Corrosion Allow. : **3.0 mm**
Design Code : **ASME B31.8**

PIPING CLASS **DX1**

APPENDIX 23

Văn bản này được xác thực tại https://eoffice.vietsov.com.vn với số định danh: 627/25-CV-XDM/NIPI

Valve Code	Valve Type	Description	Rating	End Conn.	Nominal Diameter, in: 1/2	3/4	1	1.1/2	2	2.1/2	3	4	6	8	10	12	14	16	18	20	24	Notes
CH62AN	Check Valves	Piston	6000 Psi / 1500#	SW ends.	Horizontal type																	3
CHE5AN		Piston	1500#	RTJ Flanged	Horizontal type																	3
CHE5BN		Swing	1500#	RTJ Flanged					← Horizontal & Vertical type													3
CHD5BN		Swing	900#	RTJ Flanged							Horizontal & Vertical type											3
CHE5CN		Wafer	1500#	RTJ Wafer					← Horizontal & Vertical type													3
CHD5CN		Wafer	900#	RTJ Wafer							Horizontal & Vertical type											3
NV62AT	Needle Valves		6000 Psi / 1500#	SW ends.	Inside Screw, T-bar OP.																	3
NV66AT				SW x NPTF	Inside Screw, T-bar OP.																	3
NV61AT				NPTF ends.	Inside Screw, T-bar OP.																	3
PLE5CL	Plug Valves	Regular-Pattern	1500#	RTJ Flanged					Lever OP.													3
PLD5CL		Regular-Pattern	900#	RTJ Flanged							Lever OP.											3
PLD5BG		Venturi-Pattern	900#	RTJ Flanged									Gear OP.									3
DBE9AL	Double Block and Bleed Valves		1500#	RTJ Flanged x NPTF	Floating, Lever OP. & Inside Screw, T-bar OP.																	3
DBE5AL			1500#	RTJ Flanged	Floating, Lever OP. & Inside Screw, T-bar OP.																	3
MVE9ET	Monoflange Valves	Integral Body	1500#	RTJ Flanged x NPTF ends.	Double Block & Bleed, T-bar OP.																	3

APPENDIX 23

Maximum Allowable Working Pressure At Temperature ASME B16.5 - Material Group 1.1										
Deg.C	0	38	50	100	150	200				
kPa	15320	15320	15040	13980	13520	13140				
Bar	153.2	153.2	150.4	139.8	135.2	131.4				

Material : **Carbon Steel High Strength**
Rating : **ASME Rating 900**
Service: **Refer to Class index**
Corrosion Allow. : **3.0 mm**
Design Code : **ASME B31.8**

PIPING CLASS **DX1**

Văn bản này được xác thực tại https://eoffice.vietsov.com.vn với số định danh: 627/25-CV-XDM/NIPI

BRANCH CONNECTIONS

1 Equal Tee BW.
2 Reducing Tee BW.
3 Equal Tee SW.
4 Reducing Tee SW.
5 Weldolet
6 Sockolet

Nominal Diameter, in		BRANCH SIZE																	Notes
		1/2	3/4	1	1.1/2	2	2.1/2	3	4	6	8	10	12	14	16	18	20	24	
HEADER SIZE	24	6	6	6	6	5	5	5	5	5	5	5	2	2	2	2	2	1	
	20	6	6	6	6	5	5	5	5	5	5	2	2	2	2	2	1		
	18	6	6	6	6	5	5	5	5	5	5	2	2	2	2	1			
	16	6	6	6	6	5	5	5	5	5	2	2	2	2	1				
	14	6	6	6	6	5	5	5	5	5	2	2	2	1					
	12	6	6	6	6	5	5	5	5	2	2	2	1						
	10	6	6	6	6	5	5	5	2	2	2	1							
	8	6	6	6	6	5	5	5	2	2	1								
	6	6	6	6	6	5	2	2	2	1									
	4	6	6	6	6	2	2	2	1										
	3	6	6	6	6	2	2	1											
	2.1/2	6	6	6	6	2	1												
	2	6	6	6	2	1													
	1.1/2	4	4	4	3														
	1	4	4	3															
	3/4	4	3																
	1/2	3																	

NOTES :

1. Screwed connections shall be NPT taper/ taper combination in accordance with ASME B1.20.1.
2. Welded pipe type shall be longitudinal SAW, 100% Radiographed, Quality factors = 1 (refer to ASME B31.3 - Table A-1B)
3. Refer to data sheet for Manual Valves: VSP-NIPI-TYP-TS-PI1-DS

APPENDIX 23

Maximum Allowable Working Pressure At Temperature										
ASME B16.5 - Material Group 1.1										
Deg.C	0	38	50	100	150	200				
kPa	15320	15320	15040	13980	13520	13140				
Bar	153.2	153.2	150.4	139.8	135.2	131.4				

Material :	**Carbon Steel High Strength**
Rating :	**ASME Rating 900**
Service:	**Refer to Class index**
Corrosion Allow. :	**3.0 mm**
Design Code :	**ASME B31.8**

PIPING CLASS **DX1**

Văn bản này được xác thực tại https://eoffice.vietsov.com.vn với số định danh: 627/25-CV-XDM/NIPI

PIPING MATERIAL CLASS SPECIFICATION: EC1 - 1500#

	Nominal Diameter, in	1/2	3/4	1	1.1/2	2	2.1/2	3	4	6	8	10	12	14	16	Notes
	ASME Schedule	XXS	XXS	XXS	XXS	XXS	XXS	160	160	160	160	160	160	160	160	
	Wall Thickness, mm	7.47	7.82	9.09	10.15	11.07	14.02	11.13	13.49	18.26	23.01	28.58	33.32	35.71	40.49	

Description	End Conn.	Sch./Rating	Standard		Notes
Pipe Seamless	BE		ASME B36.10M	ASTM A106 Gr.B	
Elbow LR 90 Deg.	BW	As Pipe	ASME B16.9	ASTM A234 Gr. WPB	
Elbow LR 45 Deg.	BW	As Pipe	ASME B16.9	ASTM A234 Gr. WPB	
Equal Tee	BW	As Pipe	ASME B16.9	ASTM A234 Gr. WPB	
Reducing Tee	BW	As Pipe	ASME B16.9	ASTM A234 Gr. WPB	
End Cap	BW	As Pipe	ASME B16.9	ASTM A234 Gr. WPB	
Eccentric Reducer	BW	As Pipe	ASME B16.9	ASTM A234 Gr. WPB	
Concentric Reducer	BW	As Pipe	ASME B16.9	ASTM A234 Gr. WPB	
Concentric Swage	BLE/PSE	As Pipe	MSS SP-95	ASTM A105N	
Eccentric Swage	BLE/PSE	As Pipe	MSS SP-95	ASTM A105N	
Concentric Swage	PBE	As Pipe	MSS SP-95	ASTM A105N	
Eccentric Swage	PBE	As Pipe	MSS SP-95	ASTM A105N	
Plug Hex Head	THR'D	6000#	ASME B16.11	ASTM A105N	1
Nipple, 100mm length	PBE	As Pipe	ASME B36.10M	ASTM A106 Gr. B	
Nipple, 100mm length	TBE	As Pipe	ASME B36.10M	ASTM A106 Gr. B	
Weldolet	BW	As Pipe	MSS SP-97	ASTM A105N	

APPENDIX 24

Maximum Allowable Working Pressure At Temperature
ASME B16.5 - Material Group 1.1

Deg.C	0	38	50	100	150	200
kPa	25530	25530	25060	23300	25540	21900
Bar	255.3	255.3	250.6	233	225.4	219

Material : **Carbon Steel**
Rating : **ASME Rating 1500**
Service: **Refer to Class index**
Corrosion Allow. : **3.0 mm**
Design Code : **ASME B31.3**

PIPING CLASS **EC1**

Văn bản này được xác thực tại https://eoffice.vietsov.com.vn với số định danh: 627/25-CV-XDM/NIPI

Description	End Conn.	Sch./Rating	Standard	Nominal Diameter, in: 1/2	3/4	1	1.1/2	2	2.1/2	3	4	6	8	10	12	14	16	Notes
Flange - Weld Neck	BW	1500# RTJ	ASME B16.5	ASTM A105N Bore to match pipe														
Flange - Blind		1500# RTJ	ASME B16.5	ASTM A105N														
Spectacle Blind		1500# RTJ	ASME B16.48	ASTM A516 Gr.70														
Spade/ Spacer		1500# RTJ	ASME B16.48	ASTM A516 Gr.70 →														
Gasket		1500# RTJ	ASME B16.20	Gasket Soft Iron, Hardness 90 BHN, Electroplated Zinc Coated, Octagonal RTJ, Type R														
Stud bolts fully threaded			ASME B18.2.1/ B18.2.2	ASTM A193 Gr.B7/ A194 Gr.2H Sermagard Coated														

APPENDIX 24

Maximum Allowable Working Pressure At Temperature									
ASME B16.5 - Material Group 1.1									
Deg.C	0	38	50	100	150	200			
kPa	25530	25530	25060	23300	25540	21900			
Bar	255.3	255.3	250.6	233	225.4	219			

Material :	**Carbon Steel**
Rating :	**ASME Rating 1500**
Service:	**Refer to Class index**
Corrosion Allow. :	**3.0 mm**
Design Code :	**ASME B31.3**

PIPING CLASS **EC1**

Văn bản này được xác thực tại https://eoffice.vietsov.com.vn với số định danh: 627/25-CV-XDM/NIPI

			Nominal Diameter, in		1/2	3/4	1	1.1/2	2	2.1/2	3	4	6	8	10	12	14	16	Notes
Valve Code	Valve Type	Description	Rating	End Conn.															
BA62AL	Ball	Full Bore	6000 Psi / 1500#	SW ends.	Trunnion, Lever OP.														4
BA66AL	Valves	Full Bore		SW x NPTF	Trunnion, Lever OP.														4
BA61AL		Full Bore		NPTF ends.	Trunnion, Lever OP.														4
BAE5BL		Full Bore	1500#	RTJ Flanged	Trunnion, Lever OP.														4
BAE5BG		Full Bore	1500#	RTJ Flanged							Trunnion, Gear OP.								4
BAE5DL		Reduced Bore	1500#	RTJ Flanged	Trunnion, Lever OP.														4
BAE5DG		Reduced Bore	1500#	RTJ Flanged							Trunnion, Gear OP.								4
GL62AH	Globe		6000 Psi / 1500#	SW ends.	Rising Stem OS & Y, Handweel														
GLE5AH	Valves		1500#	RTJ Flanged							← Rising Stem OS & Y, Handweel								4
GLE5AG			1500#	RTJ Flanged							Rising Stem OS & Y, Gear OP								4
GA62AH	Gate	Solid Wedge	6000 Psi / 1500#	SW ends.	Rising Stem OS & Y, Handweel														4
GAE5AH	Valves	Solid Wedge	1500#	RTJ Flanged							← Rising Stem OS & Y, Handweel								4
GAE5GH		Flexible Wedge	1500#	RTJ Flanged	Rising Stem OS & Y, Handweel →														4
GAE5GG		Flexible Wedge	1500#	RTJ Flanged								Rising Stem OS & Y, Gear OP.							4
CH62AN	Check	Piston	6000 Psi / 1500#	SW ends.	Horizontal type														4
CHE5AN	Valves	Piston	1500#	RTJ Flanged	Horizontal type														4
CHE5BN		Swing	1500#	RTJ Flanged							Horizontal & Vertical type								4
CHE5CN		Wafer	1500#	RTJ Wafer							Horizontal & Vertical type								4
NV62AT	Needle		6000 Psi / 1500#	SW ends.	Inside Screw, T-bar OP.														4
NV66AT	Valves			SW x NPTF	Inside Screw, T-bar OP.														4
NV61AT				NPTF ends.	Inside Screw, T-bar OP.														4
DBE9AL	Double Block and Bleed Valves		1500#	RTJ Flanged x NPTF	Trunnion, Lever OP. & Inside Screw, T-bar OP.														4
DBE5AL			1500#	RTJ Flanged	Trunnion, Lever OP. & Inside Screw, T-bar OP.														4
PLE5CL	Plug	Regular-Pattern	1500#	RTJ Flanged					Lever OP.										4
PLE5CG	Valves	Regular-Pattern	1500#	RTJ Flanged							Gear OP.								4
MVE9ET	Monoflange Valves	Integral Body	1500#	RTJ Flanged x NPTF ends.	Double Block & Bleed, T-bar OP.														4

Maximum Allowable Working Pressure At Temperature

ASME B16.5 - Material Group 1.1

Deg.C	0	38	50	100	150	200
kPa	25530	25530	25060	23300	25540	21900
Bar	255.3	255.3	250.6	233	225.4	219

Material : **Carbon Steel**
Rating : **ASME Rating 1500**
Service: **Refer to Class index**
Corrosion Allow. : **3.0 mm**
Design Code : **ASME B31.3**

PIPING CLASS **EC1**

Sheet 3 of 4

APPENDIX 24

Văn bản này được xác thực tại https://eoffice.vietsov.com.vn với số định danh: 627/25-CV-XDM/NIPI

BRANCH CONNECTIONS

1 Equal Tee BW.
2 Reducing Tee BW.
3 Weldolet

Nominal Diameter, in	BRANCH SIZE													
	1/2	3/4	1	1.1/2	2	2.1/2	3	4	6	8	10	12	14	16
16	3	3	3	3	3	3	3	3	3	2	2	2	2	1
14	3	3	3	3	3	3	3	3	3	2	2	2	1	
12	3	3	3	3	3	3	3	3	2	2	2	1		
10	3	3	3	3	3	3	3	3	2	2	1			
8	3	3	3	3	3	3	3	2	2	1				
6	3	3	3	3	3	2	2	2	1					
4	3	3	3	3	2	2	2	1						
3	3	3	3	3	2	2	1							
2.1/2	3	3	3	3	2	1								
2	3	3	3	2	1									
1.1/2	2	2	2	1										
1	2	2	1											
3/4	2	1												
1/2	1													

HEADER

Notes

NOTES :

1. Screwed connections shall be NPT taper/ taper combination in accordance with ASME B1.20.1.
2. Pipe API 5L Gr. B seamless is an acceptable substitute for ASTM A106 Gr. B where specified.
3. Welded pipe type shall be longitudinal SAW, 100% Radiographed, Quality factors = 1 (refer to ASME B31.3 - Table A-1B)
4. Refer to data sheet for Manual Valves: VSP-NIPI-TYP-TS-PI1-DS

APPENDIX 24

Maximum Allowable Working Pressure At Temperature									
ASME B16.5 - Material Group 1.1									
Deg.C	0	38	50	100	150	200			
kPa	25530	25530	25060	23300	25540	21900			
Bar	255.3	255.3	250.6	233	225.4	219			

Material :	**Carbon Steel**
Rating :	**ASME Rating 1500**
Service:	**Refer to Class index**
Corrosion Allow. :	**3.0 mm**
Design Code :	**ASME B31.3**

PIPING CLASS **EC1**

Văn bản này được xác thực tại https://eoffice.vietsov.com.vn với số định danh: 627/25-CV-XDM/NIPI

	Nominal Diameter, in	1/2	3/4	1	1.1/2	2	2.1/2	3	4	6	8	10	12	14	16	Notes
	ASME Schedule	160	160	160	160	160	160	160	120	120	120	120	120	120	120	
	Wall Thickness, mm	4.78	5.56	6.35	7.14	8.74	9.53	11.13	11.13	14.27	18.26	21.44	25.4	27.79	30.96	

Description	End Conn.	Sch./Rating	Standard		Notes
Pipe Seamless	BE		ASME B36.10M	API 5L Gr.X60	
Elbow LR 90 Deg	BW	As Pipe	ASME B16.9	ASTM A860-WPHY60	
Elbow LR 45 Deg	BW	As Pipe	ASME B16.9	ASTM A860-WPHY60	
Equal Tee	BW	As Pipe	ASME B16.9	ASTM A860-WPHY60	
Reducing Tee	BW	As Pipe	ASME B16.9	ASTM A860-WPHY60	
End Cap	BW	As Pipe	ASME B16.9	ASTM A860-WPHY60	
Eccentric Reducer	BW	As Pipe	ASME B16.9	ASTM A860-WPHY60	
Concentric Reducer	BW	As Pipe	ASME B16.9	ASTM A860-WPHY60	
Concentric Swage	BLE/PSE	As Pipe	MSS SP-95	ASTM A694-Gr.F60	
Eccentric Swage	BLE/PSE	As Pipe	MSS SP-95	ASTM A694-Gr.F60	
Concentric Swage	PBE	As Pipe	MSS SP-95	ASTM A694-Gr.F60	
Eccentric Swage	PBE	As Pipe	MSS SP-95	ASTM A694-Gr.F60	
Plug Hex Head	THR'D	6000#	ASME B16.11	ASTM A694-Gr.F60	1
Nipple, 100mm length	PBE	As Pipe	ASME B36.10M	API 5L Gr.X60	
Nipple, 100mm length	TBE	As Pipe	ASME B36.10M	API 5L Gr.X60	
Weldolet	BW	As Pipe	MSS SP-97	ASTM A694-Gr.F60	

Maximum Allowable Working Pressure At Temperature
ASME B16.5 - Material Group 1.1

Deg.C	0	38	50	100	150	200
kPa	25530	25530	25060	23300	25540	21900
Bar	255.3	255.3	250.6	233	225.4	219

Material : **Carbon Steel High Strength**
Rating : **ASME Rating 1500**
Service: **Refer to Class index**
Corrosion Allow. : **3.0 mm**
Design Code : **ASME B31.4**

PIPING CLASS **EX1**

Sheet 1 of 4

APPENDIX 25

Văn bản này được xác thực tại https://eoffice.vietsov.com.vn với số định danh: 627/25-CV-XDM/NIPI

Description	End Conn.	Sch./Rating	Standard	Nominal Diameter, in: 1/2	3/4	1	1.1/2	2	2.1/2	3	4	6	8	10	12	14	16	Notes
Flange - Weld Neck	BW	1500# RTJ	ASME B16.5	ASTM A694-Gr.F60 Bore to match pipe														
Flange - Blind		1500# RTJ	ASME B16.5	ASTM A694-Gr.F60														
Spectacle Blind		1500# RTJ	ASME B16.48	ASTM A694-Gr.F60														
Spade/ Spacer		1500# RTJ	ASME B16.48	ASTM A694-Gr.F60 →														
Gasket		1500# RTJ	ASME B16.20	Gasket Soft Iron, Hardness 90 BHN, Electroplated Zinc Coated, Octagonal RTJ, Type R														
Stud bolts fully threaded			ASME B18.2.1/ B18.2.2	ASTM A193 Gr.B7/ A194 Gr.2H Sermagard Coated														

Maximum Allowable Working Pressure At Temperature
ASME B16.5 - Material Group 1.1

Deg.C	0	38	50	100	150	200
kPa	25530	25530	25060	23300	25540	21900
Bar	255.3	255.3	250.6	233	225.4	219

Material : **Carbon Steel High Strength**
Rating : **ASME Rating 1500**
Service: **Refer to Class index**
Corrosion Allow. : **3.0 mm**
Design Code : **ASME B31.4**

PIPING CLASS **EX1**

APPENDIX 25

Văn bản này được xác thực tại https://eoffice.vietsov.com.vn với số định danh: 627/25-CV-XDM/NIPI

Valve Code	Valve Type	Description	Rating	End Conn.	Nominal Diameter, in: 1/2	3/4	1	1.1/2	2	2.1/2	3	4	6	8	10	12	14	16	Notes
BA62UL	Ball Valves	Full Bore	6000 Psi / 1500#	SW ends.	Trunnion, Lever OP.														3
BA66UL		Full Bore		SW x NPTF	Trunnion, Lever OP.														3
BA61UL		Full Bore		NPTF ends.	Trunnion, Lever OP.														3
BAE5UL		Full Bore	1500#	RTJ Flanged	Trunnion, Lever OP.														3
BAE5UG		Full Bore	1500#	RTJ Flanged							Trunnion, Gear OP.								3
BAE5VL		Reduced Bore	1500#	RTJ Flanged	Trunnion, Lever OP.														3
BAE5VG		Reduced Bore	1500#	RTJ Flanged							Trunnion, Gear OP.								3
GL62FH	Globe Valves		6000 Psi / 1500#	SW ends.	Rising Stem OS & Y, Handweel														
GLE5FH			1500#	RTJ Flanged					← Rising Stem OS & Y, Handweel										3
GLE5FG			1500#	RTJ Flanged							Rising Stem OS & Y, Gear OP								3
GA62FH	Gate Valves	Solid Wedge	6000 Psi / 1500#	SW ends.	Rising Stem OS & Y, Handweel														3
GAE5FH		Solid Wedge	1500#	RTJ Flanged					← Rising Stem OS & Y, Handweel										3
GAE5LH		Flexible Wedge	1500#	RTJ Flanged	Rising Stem OS & Y, Handweel →														3
GAE5LG		Flexible Wedge	1500#	RTJ Flanged								Rising Stem OS & Y, Gear OP.							3
CH62PN	Check Valves	Piston	6000 Psi / 1500#	SW ends.	Horizontal type														3
CHE5PN		Piston	1500#	RTJ Flanged	Horizontal type														3
CHE5QN		Swing	1500#	RTJ Flanged					Horizontal & Vertical type										3
CHE5RN		Wafer	1500#	RTJ Wafer					Horizontal & Vertical type										3
NV62ET	Needle Valves		6000 Psi / 1500#	SW ends.	Inside Screw, T-bar OP.														3
NV66ET				SW x NPTF	Inside Screw, T-bar OP.														3
NV61ET				NPTF ends.	Inside Screw, T-bar OP.														3
DBE9EL	Double Block and Bleed Valves		1500#	RTJ Flanged x NPTF	Trunnion, Lever OP. & Inside Screw, T-bar OP.														3
DBE5EL			1500#	RTJ Flanged	Trunnion, Lever OP. & Inside Screw, T-bar OP.														3
MVE9IT	Monoflange Valves	Integral Body	1500#	RTJ Flanged x NPTF ends.	Double Block & Bleed, T-bar OP.														3

Maximum Allowable Working Pressure At Temperature
ASME B16.5 - Material Group 1.1

Deg.C	0	38	50	100	150	200
kPa	25530	25530	25060	23300	25540	21900
Bar	255.3	255.3	250.6	233	225.4	219

Material : **Carbon Steel High Strength**
Rating : **ASME Rating 1500**
Service: **Refer to Class index**
Corrosion Allow. : **3.0 mm**
Design Code : **ASME B31.4**

PIPING CLASS **EX1**

APPENDIX 25

Văn bản này được xác thực tại https://eoffice.vietsov.com.vn với số định danh: 627/25-CV-XDM/NIPI

BRANCH CONNECTIONS

1 Equal Tee BW.
2 Reducing Tee BW.
3 Weldolet

Nominal Diameter, in		BRANCH SIZE														Notes
		1/2	3/4	1	1.1/2	2	2.1/2	3	4	6	8	10	12	14	16	
H	16	3	3	3	3	3	3	3	3	3	2	2	2	2	1	
E	14	3	3	3	3	3	3	3	3	3	2	2	2	1		
A	12	3	3	3	3	3	3	3	3	2	2	2	1			
D	10	3	3	3	3	3	3	3	3	2	2	1				
E	8	3	3	3	3	3	3	3	2	2	1					
R	6	3	3	3	3	3	2	2	2	1						
	4	3	3	3	3	2	2	2	1							
S	3	3	3	3	3	2	2	1								
I	2.1/2	3	3	3	3	2	1									
Z	2	3	3	3	2	1										
E	1.1/2	2	2	2	1											
	1	2	2	1												
	3/4	2	1													
	1/2	1														

NOTES :

1. Screwed connections shall be NPT taper/ taper combination in accordance with ASME B1.20.1.
2. Welded pipe type shall be longitudinal SAW, 100% Radiographed, Quality factors = 1 (refer to ASME B31.3 - Table A-1B)
3. Refer to data sheet for Manual Valves: VSP-NIPI-TYP-TS-PI1-DS

APPENDIX 25

Maximum Allowable Working Pressure At Temperature									
ASME B16.5 - Material Group 1.1									
Deg.C	0	38	50	100	150	200			
kPa	25530	25530	25060	23300	25540	21900			
Bar	255.3	255.3	250.6	233	225.4	219			

Material :	**Carbon Steel High Strength**	PIPING CLASS	
Rating :	**ASME Rating 1500**	**EX1**	
Service:	**Refer to Class index**		
Corrosion Allow. :	**3.0 mm**	Sheet 4 of 4	
Design Code :	**ASME B31.4**		

Văn bản này được xác thực tại https://eoffice.vietsov.com.vn với số định danh: 627/25-CV-XDM/NIPI

	Nominal Diameter, in	1/2	3/4	1	1.1/2	2	2.1/2	3	4	6	8	10	Notes
	ASME Schedule	XXS	XXS	XXS	XXS	XXS	XXS	160	160	160	160	160	
	Wall Thickness, mm	7.47	7.82	9.09	10.15	11.07	14.02	11.13	13.49	18.26	23.01	28.58	

Description	End Conn.	Sch./Rating	Standard		
Pipe Seamless	BE		ASME B36.10M	API 5L Gr.X60	
Elbow LR 90 Deg	BW	As Pipe	ASME B16.9	ASTM A860-WPHY60	
Elbow LR 45 Deg	BW	As Pipe	ASME B16.9	ASTM A860-WPHY60	
Equal Tee	BW	As Pipe	ASME B16.9	ASTM A860-WPHY60	
Reducing Tee	BW	As Pipe	ASME B16.9	ASTM A860-WPHY60	
End Cap	BW	As Pipe	ASME B16.9	ASTM A860-WPHY60	
Eccentric Reducer	BW	As Pipe	ASME B16.9	ASTM A860-WPHY60	
Concentric Reducer	BW	As Pipe	ASME B16.9	ASTM A860-WPHY60	
Concentric Swage	BLE/PSE	As Pipe	MSS SP-95	ASTM A694-Gr.F60	
Eccentric Swage	BLE/PSE	As Pipe	MSS SP-95	ASTM A694-Gr.F60	
Concentric Swage	PBE	As Pipe	MSS SP-95	ASTM A694-Gr.F60	
Eccentric Swage	PBE	As Pipe	MSS SP-95	ASTM A694-Gr.F60	
Plug Hex Head	THR'D	6000#	ASME B16.11	ASTM A694-Gr.F60	1
Nipple, 100mm length	PBE	As Pipe	ASME B36.10M	API 5L Gr.X60	
Nipple, 100mm length	TBE	As Pipe	ASME B36.10M	API 5L Gr.X60	
Weldolet	BW	As Pipe	MSS SP-97	ASTM A694-Gr.F60	

APPENDIX 26

Maximum Allowable Working Pressure At Temperature						
ASME B16.5 - Material Group 1.1						
Deg.C	0	38	50	100	150	200
kPa	42550	42550	41770	38830	37560	36500
Bar	425.5	425.5	417.7	388.3	375.6	365

Material : **Carbon Steel High Strength**
Rating : **ASME Rating 2500**
Service: **Refer to Class index**
Corrosion Allow. : **3.0 mm**
Design Code : **ASME B31.3**

PIPING CLASS **FC1**

Văn bản này được xác thực tại https://eoffice.vietsov.com.vn với số định danh: 627/25-CV-XDM/NIPI

Description	End Conn.	Sch./Rating	Standard	Nominal Diameter, in: 1/2	3/4	1	1.1/2	2	2.1/2	3	4	6	8	10	Notes
Flange - Weld Neck	BW	2500# RTJ	ASME B16.5	ASTM A694-Gr.F60 Bore to match pipe											
Flange - Blind		2500# RTJ	ASME B16.5	ASTM A694-Gr.F60											
Spectacle Blind		2500# RTJ	ASME B16.48	ASTM A694-Gr.F60											
Spade/ Spacer		2500# RTJ	ASME B16.48	← ASTM A694-Gr.F60											
Gasket		2500# RTJ	ASME B16.20	Gasket Soft Iron, Hardness 90 BHN, Electroplated Zinc Coated, Octagonal RTJ, Type R											
Stud bolts fully threaded			ASME B18.2.1/ B18.2.2	ASTM A193 Gr.B7/ A194 Gr.2H Sermagard Coated											

APPENDIX 26

Maximum Allowable Working Pressure At Temperature									
ASME B16.5 - Material Group 1.1									
Deg.C	0	38	50	100	150	200			
kPa	42550	42550	41770	38830	37560	36500			
Bar	425.5	425.5	417.7	388.3	375.6	365			

Material :	**Carbon Steel High Strength**
Rating :	**ASME Rating 2500**
Service:	**Refer to Class index**
Corrosion Allow. :	**3.0 mm**
Design Code :	**ASME B31.3**

PIPING CLASS **FC1**

Văn bản này được xác thực tại https://eoffice.vietsov.com.vn với số định danh: 627/25-CV-XDM/NIPI

			Nominal Diameter, in		1/2	3/4	1	1.1/2	2	2.1/2	3	4	6	8	10	Notes
Valve Code	Valve Type	Description	Rating	End Conn.												
BA62UL	Ball	Full Bore	6000 Psi / 2500#	SW ends.	Trunnion, Lever OP.											3
BA66UL	Valves	Full Bore		SW x NPTF	Trunnion, Lever OP.											3
BA61UL		Full Bore		NPTF ends.	Trunnion, Lever OP.											3
BAF5UL		Full Bore	2500#	RTJ Flanged	Trunnion, Lever OP.											3
BAF5UG		Full Bore	2500#	RTJ Flanged					Trunnion, Gear OP.							3
BAF5VL		Reduced Bore	2500#	RTJ Flanged	Trunnion, Lever OP.											3
BAF5VG		Reduced Bore	2500#	RTJ Flanged					Trunnion, Gear OP.							3
GL62FH	Globe		6000 Psi / 2500#	SW ends.	Rising Stem OS & Y, Handweel											3
GLF5FH	Valves		2500#	RTJ Flanged					← Rising Stem OS & Y, Handweel							3
GLF5FG			2500#	RTJ Flanged							← Rising Stem OS & Y, Gear OP					3
GA62FH	Gate	Solid Wedge	6000 Psi / 2500#	SW ends.	Rising Stem OS & Y, Handweel											3
GAF5FH	Valves	Solid Wedge	2500#	RTJ Flanged					← Rising Stem OS & Y, Handweel							3
GAF5LG		Flexible Wedge	2500#	RTJ Flanged							← Rising Stem OS & Y, Gear OP.					3
CH62PN	Check	Piston	6000 Psi / 2500#	SW ends.	Horizontal type											3
CHF5PN	Valves	Piston	2500#	RTJ Flanged	Horizontal type											3
CHF5QN		Swing	2500#	RTJ Flanged					Horizontal & Vertical type							3
CHF5RN		Wafer	2500#	RTJ Wafer					Horizontal & Vertical type							3
NV62ET	Needle		6000 Psi / 2500#	SW ends.	Inside Screw, T-bar OP.											3
NV66ET	Valves			SW x NPTF	Inside Screw, T-bar OP.											3
NV61ET				NPTF ends.	Inside Screw, T-bar OP.											3
DBF9EL	Double Block and Bleed Valves		2500#	RTJ Flanged x NPTF	Trunnion, Lever OP. & Inside Screw, T-bar OP.											3
DBF5EL			2500#	RTJ Flanged	Trunnion, Lever OP. & Inside Screw, T-bar OP.											3
PLF5OG	Plug Valves	Regular-Pattern	2500#	RTJ Flanged					Gear OP.							3
MVF9IT	Monoflange Valves	Integral Body	2500#	RTJ Flanged x NPTF ends.	Double Block & Bleed, T-bar OP.											3

Maximum Allowable Working Pressure At Temperature

ASME B16.5 - Material Group 1.1

Deg.C	0	38	50	100	150	200
kPa	42550	42550	41770	38830	37560	36500
Bar	425.5	425.5	417.7	388.3	375.6	365

Material : **Carbon Steel High Strength**
Rating : **ASME Rating 2500**
Service: **Refer to Class index**
Corrosion Allow. : **3.0 mm**
Design Code : **ASME B31.3**

PIPING CLASS **FC1**

APPENDIX 26

Văn bản này được xác thực tại https://eoffice.vietsov.com.vn với số định danh: 627/25-CV-XDM/NIPI

BRANCH CONNECTIONS

1 Equal Tee BW.
2 Reducing Tee BW.
3 Weldolet

Nominal Diameter, in		BRANCH SIZE											Notes
	10	3	3	3	3	3	3	3	3	2	2	1	
H	8	3	3	3	3	3	3	3	2	2	1		
E	6	3	3	3	3	3	2	2	2	1			
A	4	3	3	3	3	2	2	2	1				
D	3	3	3	3	3	2	2	1					
E	2.1/2	3	3	3	3	2	1						
R	2	3	3	3	2	1							
S	1.1/2	2	2	2	1								
I	1	2	2	1									
Z	3/4	2	1										
E	1/2	1											

NOTES :

1. Screwed connections shall be NPT taper/ taper combination in accordance with ASME B1.20.1.
2. Welded pipe type shall be longitudinal SAW, 100% Radiographed, Quality factors = 1 (refer to ASME B31.3 - Table A-1B)
3. Refer to data sheet for Manual Valves: VSP-NIPI-TYP-TS-PI1-DS

APPENDIX 26

Maximum Allowable Working Pressure At Temperature									
ASME B16.5 - Material Group 1.1									
Deg.C	0	38	50	100	150	200			
kPa	42550	42550	41770	38830	37560	36500			
Bar	425.5	425.5	417.7	388.3	375.6	365			

Material :	**Carbon Steel High Strength**
Rating :	**ASME Rating 2500**
Service:	**Refer to Class index**
Corrosion Allow. :	**3.0 mm**
Design Code :	**ASME B31.3**

PIPING CLASS **FC1**

Văn bản này được xác thực tại https://eoffice.vietsov.com.vn với số định danh: 627/25-CV-XDM/NIPI

	Nominal Diameter, in	1/2	3/4	1	1.1/2	2	2.1/2	3	4	6	8	Notes
	ASME Schedule	XXS	XXS	XXS	XXS	XXS	XXS	XXS	XXS	XXS	-	
	Wall Thickness, mm	7.47	7.82	9.09	10.15	11.07	14.02	15.24	17.12	21.95	28	3

Description	End Conn.	Sch./Rating	Standard		Notes
Pipe Seamless	BE		ASME B36.10M	API 5L Gr.X60	
Elbow LR 90 Deg.	BW	As Pipe	ASME B16.9	ASTM A860-WPHY60	
Elbow LR 45 Deg.	BW	As Pipe	ASME B16.9	ASTM A860-WPHY60	
Equal Tee	BW	As Pipe	ASME B16.9	ASTM A860-WPHY60	
Reducing Tee	BW	As Pipe	ASME B16.9	ASTM A860-WPHY60	
End Cap	BW	As Pipe	ASME B16.9	ASTM A860-WPHY60	
Eccentric Reducer	BW	As Pipe	ASME B16.9	ASTM A860-WPHY60	
Concentric Reducer	BW	As Pipe	ASME B16.9	ASTM A860-WPHY60	
Concentric Swage	BLE/PSE	As Pipe	MSS SP-95	ASTM A694-Gr.F60	
Eccentric Swage	BLE/PSE	As Pipe	MSS SP-95	ASTM A694-Gr.F60	
Concentric Swage	PBE	As Pipe	MSS SP-95	ASTM A694-Gr.F60	
Eccentric Swage	PBE	As Pipe	MSS SP-95	ASTM A694-Gr.F60	
Plug Hex Head	THR'D	6000#	ASME B16.11	ASTM A694-Gr.F60	1
Nipple, 100mm length	PBE	As Pipe	ASME B36.10M	API 5L Gr.X60	
Nipple, 100mm length	TBE	As Pipe	ASME B36.10M	API 5L Gr.X60	
Weldolet	BW	As Pipe	MSS SP-97	ASTM A694-Gr.F60	

Maximum Allowable Working Pressure At Temperature

ASME B16.5 - Material Group 1.1

Deg.C	0	38	50	100	150	200
kPa	42550	42550	41770	38830	37560	36500
Bar	425.5	425.5	417.7	388.3	375.6	365

Material : **Carbon Steel High Strength**
Rating : **ASME Rating 2500**
Service: **Refer to Class index**
Corrosion Allow. : **3.0 mm**
Design Code : **ASME B31.3**

PIPING CLASS **FC2**

APPENDIX 27

Văn bản này được xác thực tại https://eoffice.vietsov.com.vn với số định danh: 627/25-CV-XDM/NIPI

PIPING MATERIAL CLASS SPECIFICATION: FC2 - 2500#

Description	End Conn.	Sch./Rating	Standard	Nominal Diameter, in: 1/2	3/4	1	1.1/2	2	2.1/2	3	4	6	8	Notes
Flange - Weld Neck	BW	2500# RTJ	ASME B16.5	ASTM A694-Gr.F60 Bore to match pipe										
Flange - Blind		2500# RTJ	ASME B16.5	ASTM A694-Gr.F60										
Spectacle Blind		2500# RTJ	ASME B16.48	ASTM A694-Gr.F60										
Spade/ Spacer		2500# RTJ	ASME B16.48	← ASTM A694-Gr.F60										
Gasket		2500# RTJ	ASME B16.20	Gasket Soft Iron, Hardness 90 BHN, Electroplated Zinc Coated, Octagonal RTJ, Type R										
Stud bolts fully threaded			ASME B18.2.1/ B18.2.2	ASTM A193 Gr.B7/ A194 Gr.2H Sermagard Coated										

Maximum Allowable Working Pressure At Temperature

ASME B16.5 - Material Group 1.1

Deg.C	0	38	50	100	150	200
kPa	42550	42550	41770	38830	37560	36500
Bar	425.5	425.5	417.7	388.3	375.6	365

Material : **Carbon Steel High Strength**
Rating : **ASME Rating 2500**
Service: **Refer to Class index**
Corrosion Allow. : **3.0 mm**
Design Code : **ASME B31.3**

PIPING CLASS **FC2**

APPENDIX 27

Văn bản này được xác thực tại https://eoffice.vietsov.com.vn với số định danh: 627/25-CV-XDM/NIPI

			Nominal Diameter, in		1/2	3/4	1	1.1/2	2	2.1/2	3	4	6	8	Notes
Valve Code	Valve Type	Description	Rating	End Conn.											
BA62UL	Ball	Full Bore	6000 Psi / 2500#	SW ends.	Trunnion, Lever OP.										2
BA66UL	Valves	Full Bore		SW x NPTF	Trunnion, Lever OP.										2
BA61UL		Full Bore		NPTF ends.	Trunnion, Lever OP.										2
BAF5UL		Full Bore	2500#	RTJ Flanged	Trunnion, Lever OP.										2
BAF5UG		Full Bore	2500#	RTJ Flanged					Trunnion, Gear OP.						2
BAF5VL		Reduced Bore	2500#	RTJ Flanged	Trunnion, Lever OP.										2
BAF5VG		Reduced Bore	2500#	RTJ Flanged					Trunnion, Gear OP.						2
GL62FH	Globe		6000 Psi / 2500#	SW ends.	Rising Stem OS & Y, Handweel										2
GLF5FH	Valves		2500#	RTJ Flanged					← Rising Stem OS & Y, Handweel						2
GLF5FG			2500#	RTJ Flanged							← Rising Stem OS & Y, Gear OP				2
GA62FH	Gate	Solid Wedge	6000 Psi / 2500#	SW ends.				← Rising Stem OS & Y, Handweel							2
GAF5FH	Valves	Solid Wedge	2500#	RTJ Flanged					← Rising Stem OS & Y, Handweel						2
GAF5LG		Flexible Wedge	2500#	RTJ Flanged							← Rising Stem OS & Y, Gear OP.				2
CH62PN	Check	Piston	6000 Psi / 2500#	SW ends.	Horizontal type										2
CHF5PN	Valves	Piston	2500#	RTJ Flanged	Horizontal type										2
CHF5QN		Swing	2500#	RTJ Flanged					Horizontal & Vertical type						2
CHF5RN		Wafer	2500#	RTJ Wafer					Dual Plate Type						2
NV62ET	Needle		6000 Psi / 2500#	SW ends.	Inside Screw, T-bar OP.										2
NV66ET	Valves			SW x NPTF	Inside Screw, T-bar OP.										2
NV61ET				NPTF ends.	Inside Screw, T-bar OP.										2
DBF9EL	Double Block and Bleed Valves		2500#	RTJ Flanged x NPTF	Trunnion, Lever OP. & Inside Screw, T-bar OP.										2
DBF5EL			2500#	RTJ Flanged	Trunnion, Lever OP. & Inside Screw, T-bar OP.										2
PLF5OG	Plug Valves	Regular-Pattern	2500#	RTJ Flanged					Gear OP.						2
MVF9IT	Monoflange Valves	Integral Body	2500#	RTJ Flanged x NPTF ends.	Double Block & Bleed, T-bar OP.										2

APPENDIX 27

Maximum Allowable Working Pressure At Temperature										
ASME B16.5 - Material Group 1.1										
Deg.C	0	38	50	100	150	200				
kPa	42550	42550	41770	38830	37560	36500				
Bar	425.5	425.5	417.7	388.3	375.6	365				

Material :	**Carbon Steel High Strength**	PIPING CLASS	
Rating :	**ASME Rating 2500**	**FC2**	
Service:	**Refer to Class index**		
Corrosion Allow. :	**3.0 mm**	Sheet 3 of 4	
Design Code :	**ASME B31.3**		

Văn bản này được xác thực tại https://eoffice.vietsov.com.vn với số định danh: 627/25-CV-XDM/NIPI

BRANCH CONNECTIONS

1 Equal Tee BW.
2 Reducing Tee BW.
3 Weldolet

	Nominal Diameter, in	BRANCH SIZE										Notes
		1/2	3/4	1	1.1/2	2	2.1/2	3	4	6	8	
H	8	3	3	3	3	3	3	3	2	2	1	
E	6	3	3	3	3	3	2	2	2	1		
A	4	3	3	3	3	2	2	2	1			
D	3	3	3	3	3	2	2	1				
E	2.1/2	3	3	3	3	2	1					
R	2	3	3	3	2	1						
S	1.1/2	2	2	2	1							
I	1	2	2	1								
Z	3/4	2	1									
E	1/2	1										

NOTES :

1. Screwed connections shall be NPT taper/ taper combination in accordance with ASME B1.20.1.
2. Refer to data sheet for Manual Valves: VSP-NIPI-TYP-TS-PI1-DS
3. No standard pipe schedule available. The selected pipe wall thickness shall be higher than the minimum required wall thickness in this table

Maximum Allowable Working Pressure At Temperature

ASME B16.5 - Material Group 1.1

Deg.C	0	38	50	100	150	200
kPa	42550	42550	41770	38830	37560	36500
Bar	425.5	425.5	417.7	388.3	375.6	365

Material : **Carbon Steel High Strength**
Rating : **ASME Rating 2500**
Service: **Refer to Class index**
Corrosion Allow. : **3.0 mm**
Design Code : **ASME B31.3**

PIPING CLASS **FC2**

APPENDIX 27

Văn bản này được xác thực tại https://eoffice.vietsov.com.vn với số định danh: 627/25-CV-XDM/NIPI

	Nominal Diameter, in	1/2	3/4	1	1.1/2	2	2.1/2	3	4	6	8	Notes
	ASME Schedule	XXS	XXS	XXS	XXS	XXS	XXS	XXS	XXS	XXS	-	
	Wall Thickness, mm	7.47	7.82	9.09	10.15	11.07	14.02	15.24	17.12	21.95	28	5

Description	End Conn.	Sch./Rating	Standard		Notes
Pipe Seamless	BE		ASME B36.10M	ASTM A106 Gr.B	
Elbow LR 90 Deg	BW	As Pipe	ASME B16.9	ASTM A234 Gr. WPB	
Elbow LR 45 Deg	BW	As Pipe	ASME B16.9	ASTM A234 Gr. WPB	
Equal Tee	BW	As Pipe	ASME B16.9	ASTM A234 Gr. WPB	
Reducing Tee	BW	As Pipe	ASME B16.9	ASTM A234 Gr. WPB	
End Cap	BW	As Pipe	ASME B16.9	ASTM A234 Gr. WPB	
Eccentric Reducer	BW	As Pipe	ASME B16.9	ASTM A234 Gr. WPB	
Concentric Reducer	BW	As Pipe	ASME B16.9	ASTM A234 Gr. WPB	
Concentric Swage	BLE/PSE	As Pipe	MSS SP-95	ASTM A105N	
Eccentric Swage	BLE/PSE	As Pipe	MSS SP-95	ASTM A105N	
Concentric Swage	PBE	As Pipe	MSS SP-95	ASTM A105N	
Eccentric Swage	PBE	As Pipe	MSS SP-95	ASTM A105N	
Plug Hex Head	THR'D	6000#	ASME B16.11	ASTM A105N	1
Nipple, 100mm length	PBE	As Pipe	ASME B36.10M	ASTM A106 Gr. B	
Nipple, 100mm length	TBE	As Pipe	ASME B36.10M	ASTM A106 Gr. B	
Weldolet	BW	As Pipe	MSS SP-97	ASTM A105N	

Maximum Allowable Working Pressure At Temperature
ASME B16.5 - Material Group 1.1

Deg.C	0	38	50	100	150	200
kPa	42550	42550	41770	38830	37560	36500
Bar	425.5	425.5	417.7	388.3	375.6	365

Material : **Carbon Steel**
Rating : **ASME Rating 2500**
Service: **Refer to Class index**
Corrosion Allow. : **3.0 mm**
Design Code : **ASME B31.3**

PIPING CLASS **FC3**

APPENDIX 28

Văn bản này được xác thực tại https://eoffice.vietsov.com.vn với số định danh: 627/25-CV-XDM/NIPI

Description	End Conn.	Sch./Rating	Standard	Nominal Diameter, in: 1/2	3/4	1	1.1/2	2	2.1/2	3	4	6	8	Notes
Flange - Weld Neck	BW	2500# RTJ	ASME B16.5	ASTM A105N Bore to match pipe										
Flange - Blind		2500# RTJ	ASME B16.5	ASTM A105N										
Spectacle Blind		2500# RTJ	ASME B16.48	ASTM A516 Gr.70										
Spade/ Spacer		2500# RTJ	ASME B16.48	ASTM A516 Gr.70 →										
Gasket		2500# RTJ	ASME B16.20	Gasket Soft Iron, Hardness 90 BHN, Electroplated Zinc Coated, Octagonal RTJ, Type R										
Stud bolts fully threaded			ASME B18.2.1/ B18.2.2	ASTM A193 Gr.B7/ A194 Gr.2H Sermagard Coated										

APPENDIX 28

Maximum Allowable Working Pressure At Temperature						
ASME B16.5 - Material Group 1.1						
Deg.C	0	38	50	100	150	200
kPa	42550	42550	41770	38830	37560	36500
Bar	425.5	425.5	417.7	388.3	375.6	365

Material : **Carbon Steel**
Rating : **ASME Rating 2500**
Service: **Refer to Class index**
Corrosion Allow. : **3.0 mm**
Design Code : **ASME B31.3**

PIPING CLASS **FC3**

Văn bản này được xác thực tại https://eoffice.vietsov.com.vn với số định danh: 627/25-CV-XDM/NIPI

Valve Code	Valve Type	Description	Rating	End Conn.	Nominal Diameter, in: 1/2	3/4	1	1.1/2	2	2.1/2	3	4	6	8	Notes
BA62AL	Ball Valves	Full Bore	6000 Psi / 2500#	SW ends.	Trunnion, Lever OP.										4
BA66AL		Full Bore		SW x NPTF	Trunnion, Lever OP.										4
BA61AL		Full Bore		NPTF ends.	Trunnion, Lever OP.										4
BAF5BL		Full Bore	2500#	RTJ Flanged	Trunnion, Lever OP.										4
BAF5BG		Full Bore	2500#	RTJ Flanged					Trunnion, Gear OP.						4
BAF5DL		Reduced Bore	2500#	RTJ Flanged	Trunnion, Lever OP.										4
BAF5DG		Reduced Bore	2500#	RTJ Flanged					Trunnion, Gear OP.						4
GL62AH	Globe Valves		6000 Psi / 2500#	SW ends.	Rising Stem OS & Y, Handweel										4
GLF5AH			2500#	RTJ Flanged					← Rising Stem OS & Y, Handweel						4
GLF5AG			2500#	RTJ Flanged							← Rising Stem OS & Y, Gear OP				4
GA62AH	Gate Valves	Solid Wedge	6000 Psi / 2500#	SW ends.	Rising Stem OS & Y, Handweel										4
GAF5AH		Solid Wedge	2500#	RTJ Flanged					← Rising Stem OS & Y, Handweel						4
GAF5GG		Flexible Wedge	2500#	RTJ Flanged							← Rising Stem OS & Y, Gear OP.				4
CH62AN	Check Valves	Piston	6000 Psi / 2500#	SW ends.	Horizontal type										4
CHF5AN		Piston	2500#	RTJ Flanged	Horizontal type										4
CHF5BN		Swing	2500#	RTJ Flanged					Horizontal & Vertical type						4
CHF5CN		Wafer	2500#	RTJ Wafer					Horizontal & Vertical type						4
NV62AT	Needle Valves		6000 Psi / 2500#	SW ends.	Inside Screw, T-bar OP.										4
NV66AT				SW x NPTF	Inside Screw, T-bar OP.										4
NV61AT				NPTF ends.	Inside Screw, T-bar OP.										4
DBF9AL	Double Block and Bleed Valves		2500#	RTJ Flanged x NPTF	Trunnion, Lever OP. & Inside Screw, T-bar OP.										4
DBF5AL			2500#	RTJ Flanged	Trunnion, Lever OP. & Inside Screw, T-bar OP.										4
PLF5CG	Plug Valves	Regular-Pattern	2500#	RTJ Flanged					Gear OP.						4
MVF9ET	Monoflange Valves	Integral Body	2500#	RTJ Flanged x NPTF ends.	Double Block & Bleed, T-bar OP.										4

Maximum Allowable Working Pressure At Temperature

ASME B16.5 - Material Group 1.1

Deg.C	0	38	50	100	150	200
kPa	42550	42550	41770	38830	37560	36500
Bar	425.5	425.5	417.7	388.3	375.6	365

Material : **Carbon Steel**
Rating : **ASME Rating 2500**
Service: **Refer to Class index**
Corrosion Allow. : **3.0 mm**
Design Code : **ASME B31.3**

PIPING CLASS **FC3**

APPENDIX 28

Văn bản này được xác thực tại https://eoffice.vietsov.com.vn với số định danh: 627/25-CV-XDM/NIPI

BRANCH CONNECTIONS

1 Equal Tee BW.
2 Reducing Tee BW.
3 Weldolet

	Nominal Diameter, in	BRANCH SIZE 1/2	3/4	1	1.1/2	2	2.1/2	3	4	6	8	Notes
A	8	3	3	3	3	3	3	3	2	2	1	
D	6	3	3	3	3	3	2	2	2	1		
E	4	3	3	3	3	2	2	2	1			
R	3	3	3	3	3	2	2	1				
	2.1/2	3	3	3	3	2	1					
S	2	3	3	3	2	1						
I	1.1/2	2	2	2	1							
Z	1	2	2	1								
E	3/4	2	1									
	1/2	1										

NOTES :

1. Screwed connections shall be NPT taper/ taper combination in accordance with ASME B1.20.1.
2. Pipe API 5L Gr. B seamless is an acceptable substitute for ASTM A106 Gr. B where specified.
3. Welded pipe type shall be longitudinal SAW, 100% Radiographed, Quality factors = 1 (refer to ASME B31.3 - Table A-1B)
4. Refer to data sheet for Manual Valves: VSP-NIPI-TYP-TS-PI1-DS
5. No standard pipe schedule available. The selected pipe wall thickness shall be higher than the minimum required wall thickness in this table

Maximum Allowable Working Pressure At Temperature
ASME B16.5 - Material Group 1.1

Deg.C	0	38	50	100	150	200
kPa	42550	42550	41770	38830	37560	36500
Bar	425.5	425.5	417.7	388.3	375.6	365

Material : **Carbon Steel**
Rating : **ASME Rating 2500**
Service: **Refer to Class index**
Corrosion Allow. : **3.0 mm**
Design Code : **ASME B31.3**

PIPING CLASS **FC3**

APPENDIX 28

Văn bản này được xác thực tại https://eoffice.vietsov.com.vn với số định danh: 627/25-CV-XDM/NIPI

PIPING MATERIAL CLASS SPECIFICATION: FS1 - 2500#

	Nominal Diameter, in	1/2	3/4	1	1.1/4	1.1/2	Notes
	ASME Schedule	80S	80S	80S	80S	80S	
	Wall Thickness, mm	3.73	3.91	4.55	4.85	5.08	

Description	End Conn.	Sch./Rating	Standard		Notes
Pipe Seamless	BE		ASME B36.19M	ASTM A312 Gr.TP316	
Elbow LR 90 Deg.	BW	As Pipe	ASME B16.9	ASTM A403-WP316	
Elbow LR 45 Deg.	BW	As Pipe	ASME B16.9	ASTM A403-WP316	
Equal Tee	BW	As Pipe	ASME B16.9	ASTM A403-WP316	
Reducing Tee	BW	As Pipe	ASME B16.9	ASTM A403-WP316	
End Cap	BW	As Pipe	ASME B16.9	ASTM A403-WP316	
Eccentric Reducer	BW	As Pipe	ASME B16.9	ASTM A403-WP316	
Concentric Reducer	BW	As Pipe	ASME B16.9	ASTM A403-WP316	
Concentric Swage	BLE/PSE	As Pipe	MSS SP-95	ASTM A403-WP316	
Eccentric Swage	BLE/PSE	As Pipe	MSS SP-95	ASTM A403-WP316	
Concentric Swage	PBE	As Pipe	MSS SP-95	ASTM A403-WP316	
Eccentric Swage	PBE	As Pipe	MSS SP-95	ASTM A403-WP316	
Plug Hex Head	THR'D	6000#	ASME B16.11	ASTM A182-F316	1
Nipple, 100mm length	PBE	As Pipe	ASME B36.19M	ASTM A312 Gr.TP316	
Nipple, 100mm length	TBE	As Pipe	ASME B36.19M	ASTM A312 Gr.TP316	
Weldolet	BW	As Pipe	MSS SP-97	ASTM A182-F316	

Maximum Allowable Working Pressure At Temperature
ASME B16.5 - Material Group 2.2

Deg.C	0	38	50	100	150	200
kPa	41370	41370	40090	35160	32080	29720
Bar	413.7	413.7	400.9	351.6	320.8	297.2

Material : **Stainless Steel**
Rating : **ASME Rating 2500**
Service: **Refer to Class index**
Corrosion Allow. : **0 mm**
Design Code : **ASME B31.3**

PIPING CLASS **FS1**

APPENDIX 29

Văn bản này được xác thực tại https://eoffice.vietsov.com.vn với số định danh: 627/25-CV-XDM/NIPI

Description	End Conn.	Sch./Rating	Standard	Nominal Diameter, in: 1/2	3/4	1	1.1/4	1.1/2	Notes
Flange - Weld Neck	BW	2500# RTJ	ASME B16.5	← ASTM A182-F316, Bore to match pipe					
Flange - Blind		2500# RTJ	ASME B16.5	ASTM A182-F316					
Spectacle Blind		2500# RTJ	ASME B16.48	ASTM A240-TP316					
Gasket		2500# RTJ	ASME B16.20	← Gasket Soft Iron, Hardness 90 BHN, Electroplated Zinc Coated, Octagonal RTJ, Type R					
Stud bolts fully threaded			ASME B18.2.1/ B18.2.2	ASTM A193 Gr.B8M/ A194 Gr.8M Sermagard Coated					

APPENDIX 29

Maximum Allowable Working Pressure At Temperature

ASME B16.5 - Material Group 2.2

Deg.C	0	38	50	100	150	200
kPa	41370	41370	40090	35160	32080	29720
Bar	413.7	413.7	400.9	351.6	320.8	297.2

Material : **Stainless Steel**
Rating : **ASME Rating 2500**
Service: **Refer to Class index**
Corrosion Allow. : **0 mm**
Design Code : **ASME B31.3**

PIPING CLASS **FS1**

Văn bản này được xác thực tại https://eoffice.vietsov.com.vn với số định danh: 627/25-CV-XDM/NIPI

			Nominal Diameter, in		1/2	3/4	1	1.1/4	1.1/2	Notes
Valve Code	Valve Type	Description	Rating	End Conn.						
BA62ML	Ball	Full Bore	6000 Psi / 2500#	SW ends.	Trunnion, Lever OP.					3
BA66ML	Valves	Full Bore		SW x NPTF	Trunnion, Lever OP.					3
BA61ML		Full Bore		NPTF ends.	Trunnion, Lever OP.					3
BAF5NL		Full Bore	2500#	RTJ Flanged	Trunnion, Lever OP.					3
BAF5PL		Reduced Bore	2500#	RTJ Flanged	Trunnion, Lever OP.					3
GL62DH	Globe		6000 Psi / 2500#	SW ends.	Rising Stem OS & Y, Handweel					3
GLF5DH	Valves		2500#	RTJ Flanged	Rising Stem OS & Y, Handweel					3
GLF5DG			2500#	RTJ Flanged	Rising Stem OS & Y, Handweel					3
GA62DH	Gate	Solid Wedge	6000 Psi / 2500#	SW ends.	Rising Stem OS & Y, Handweel					3
GAF5DH	Valves	Solid Wedge	2500#	RTJ Flanged	Rising Stem OS & Y, Handweel					3
GAF5JH		Flexible Wedge	2500#	RTJ Flanged	Rising Stem OS & Y, Handweel					3
CH62JN	Check	Piston	6000 Psi / 2500#	SW ends.	Horizontal type					3
CHF5JN	Valves	Piston	2500#	RTJ Flanged	Horizontal type					3
CHF5KN		Swing	2500#	RTJ Flanged	Horizontal & Vertical type					3
CHF5LN		Wafer	2500#	RTJ Wafer	Dual Plate Type					3
NV62DT	Needle		6000 Psi / 2500#	SW ends.	Inside Screw, T-bar OP.					3
NV66DT	Valves			SW x NPTF	Inside Screw, T-bar OP.					3
NV61DT				NPTF ends.	Inside Screw, T-bar OP.					3
DBF9DL	Double Block and Bleed Valves		2500#	RTJ Flanged x NPTF	Trunnion, Lever OP. & Inside Screw, T-bar OP.					3
DBF5DL			2500#	RTJ Flanged	Trunnion, Lever OP. & Inside Screw, T-bar OP.					3
MVD9HT	Monoflange Valves	Integral Body	2500#	RTJ Flanged x NPTF ends.	Double Block & Bleed, T-bar OP.					3

Maximum Allowable Working Pressure At Temperature

ASME B16.5 - Material Group 2.2

Deg.C	0	38	50	100	150	200
kPa	41370	41370	40090	35160	32080	29720
Bar	413.7	413.7	400.9	351.6	320.8	297.2

Material : **Stainless Steel**
Rating : **ASME Rating 2500**
Service: **Refer to Class index**
Corrosion Allow. : **0 mm**
Design Code : **ASME B31.3**

PIPING CLASS **FS1**

APPENDIX 29

Văn bản này được xác thực tại https://eoffice.vietsov.com.vn với số định danh: 627/25-CV-XDM/NIPI

			Tube OD, in	1/4	3/8	1/2	5/8	3/4	1										Notes	
			Working Pressure, Psig	10200	6500	6700	4000	3300	3100											
			Wall Thickness, in	0.065	0.065	0.083	0.065	0.065	0.083											
	Description	End Conn.	Working Pressure	Standard																
	Tube Seamless	PE		Manu. Std.	ASTM A269-TP316															
	Elbow Unior 90 Deg.	Tube Fitting	As Tube	Manu. Std.	ASTM A269-TP316															
	Elbow Unior 45 Deg.	Tube Fitting	As Tube	Manu. Std.																
	Equal Tee Union	Tube Fitting	As Tube	Manu. Std.	ASTM A276-Gr.316															
	Reducing Tee Union	Tube Fitting	As Tube	Manu. Std.	ASTM A276-Gr.316															
	End Cap	Tube Fitting	As Tube	Manu. Std.	ASTM A276-Gr.316															
	End Plug	Tube Fitting	As Tube	Manu. Std.	ASTM A276-Gr.316															
	Straight Union	Tube Fitting	As Tube	Manu. Std.	ASTM A276-Gr.316															
	Straight Reducers	Tube Fitting	As Tube	Manu. Std.	ASTM A276-Gr.316															
	Male Connectors	Tube Fitting	As Tube	Manu. Std.	ASTM A276-Gr.316															
		x NPTM																		
	Female Connectors	Tube Fitting	As Tube	Manu. Std.	ASTM A276-Gr.316															
		x NPTF																		
	Tube Adapter -	Tube PE	As Tube	Manu. Std.	ASTM A276-Gr.316															
	Male NPT	x NPTM																		
BA610ML	Ball Valve - Full Bore	Tube Fitting	6000 Psig	Manu. Std.	ASTM A351-CF8M														3	
	(for tube)																			
CH610JN	Check Valve	Tube Fitting	6000 Psig	Manu. Std.	ASTM A351-CF8M														3	
	(for tube)																			
NV610DT	Needle Valve	Tube Fitting	6000 Psig	Manu. Std.	ASTM A351-CF8M														3	
	(for tube)																			

Maximum Allowable Working Pressure At Temperature

ASME B16.5 - Material Group 2.2

Deg.C	0	38	50	100	150	200
kPa	41370	41370	40090	35160	32080	29720
Bar	413.7	413.7	400.9	351.6	320.8	297.2

Material : **Stainless Steel**
Rating : **ASME Rating 2500**
Service: **Refer to Class index**
Corrosion Allow. : **0 mm**
Design Code : **ASME B31.3**

PIPING CLASS **FS1**

APPENDIX 29

Văn bản này được xác thực tại https://eoffice.vietsov.com.vn với số định danh: 627/25-CV-XDM/NIPI

BRANCH CONNECTIONS

1 Equal Tee BW.
2 Reducing Tee BW.

	Nominal Diameter, in	BRANCH SIZE 1/2	3/4	1	1.1/4	1.1/2	Notes
HEADER SIZE	1.1/2	2	2	2	2	1	
	1.1/4	2	2	2	1		
	1	2	2	1			
	3/4	2	1				
	1/2	1					

NOTES :

1. Screwed connections shall be NPT taper/ taper combination in accordance with ASME B1.20.1.
2. Tube fitting ends connection shall be consisted of two-ferrule, tube grip to anti leakage and vibration resistance.
3. Refer to data sheet for Manual Valves: VSP-NIPI-TYP-TS-PI1-DS

APPENDIX 29

Maximum Allowable Working Pressure At Temperature									
ASME B16.5 - Material Group 2.2									
Deg.C	0	38	50	100	150	200			
kPa	41370	41370	40090	35160	32080	29720			
Bar	413.7	413.7	400.9	351.6	320.8	297.2			

Material :	**Stainless Steel**
Rating :	**ASME Rating 2500**
Service:	**Refer to Class index**
Corrosion Allow. :	**0 mm**
Design Code :	**ASME B31.3**

PIPING CLASS **FS1**

Văn bản này được xác thực tại https://eoffice.vietsov.com.vn với số định danh: 627/25-CV-XDM/NIPI

PIPING MATERIAL CLASS SPECIFICATION: GC1 - API 5000#

Nominal Diameter, in	1/2	3/4	1	1.1/2	2	2.1/2	3	4	6	8	Notes
ASME Schedule	XXS	XXS	XXS	XXS	XXS	XXS	XXS	XXS	XXS	160	
Wall Thickness, mm	7.47	7.82	9.09	10.15	11.07	14.02	15.24	17.12	21.95	23.01	

Description	End Conn.	Sch./Rating	Standard		
Pipe Seamless	BE		ASME B36.10M	API 5L Gr.X60	
Elbow LR 90 Deg.	BW	As Pipe	ASME B16.9	ASTM A860-WPHY60	
Elbow LR 45 Deg.	BW	As Pipe	ASME B16.9	ASTM A860-WPHY60	
Equal Tee	BW	As Pipe	ASME B16.9	ASTM A860-WPHY60	
Reducing Tee	BW	As Pipe	ASME B16.9	ASTM A860-WPHY60	
End Cap	BW	As Pipe	ASME B16.9	ASTM A860-WPHY60	
Eccentric Reducer	BW	As Pipe	ASME B16.9	ASTM A860-WPHY60	
Concentric Reducer	BW	As Pipe	ASME B16.9	ASTM A860-WPHY60	
Concentric Swage	BLE/PSE	As Pipe	MSS SP-95	ASTM A694-Gr.F60	
Eccentric Swage	BLE/PSE	As Pipe	MSS SP-95	ASTM A694-Gr.F60	
Concentric Swage	PBE	As Pipe	MSS SP-95	ASTM A694-Gr.F60	
Eccentric Swage	PBE	As Pipe	MSS SP-95	ASTM A694-Gr.F60	
Plug Hex Head	THR'D	6000#	ASME B16.11	ASTM A694-Gr.F60	
Nipple, 100mm length	PBE	As Pipe	ASME B36.10M	API 5L Gr.X60	
Nipple, 100mm length	TBE	As Pipe	ASME B36.10M	API 5L Gr.X60	
Weldolet	BW	As Pipe	MSS SP-97	ASTM A694-Gr.F60	

APPENDIX 30

Maximum Allowable Working Pressure At Temperature (Note 2)									
Deg.F	32	100	150	200	250	300	350	400	450
Deg.C	0	38	66	93	121	149	177	204	232
Psi	5000	5000	4910	4820	4730	4640	4550	4460	4370
Bar	345	345	339	332	326	320	314	308	301

Material : **Carbon Steel High Strength**
Rating : **API 5000**
Service: **Refer to Class index**
Corrosion Allow. : **3.0 mm**
Design Code : **ASME B31.3**

PIPING CLASS **GC1**

Văn bản này được xác thực tại https://eoffice.vietsov.com.vn với số định danh: 627/25-CV-XDM/NIPI

	Nominal Diameter, in	1/2	3/4	1	1.1/2	2	2.1/2	3	4	6	8	Notes
	Nominal Size of Flange, in	Not Specified in API 6A				2.1/16	2.9/16	3.1/8	4.1/16	7.1/16	9	

Description	End Conn.	Sch./Rating	Standard	
Flange - Weld Neck	BW	API 5000	API 6A Type 6B	ASTM A694-Gr.F60 Bore to match pipe
Flange - Blind		API 5000	API 6A Type 6B	ASTM A694-Gr.F60 Bore to match pipe
Spectacle Blind		API 5000	API 6A Type 6B	ASTM A694-Gr.F60
Spade/ Spacer		API 5000	API 6A Type 6B	ASTM A694-Gr.F60 →
Gasket		API 5000	API 6A Type R	Type R Pressure energized RTJ Soft Iron, Octagonal, max 56 HRB Hardness number
Stud bolts fully threaded			ASME B18.2.1/ B18.2.2	ASTM A193 Gr.B7/ A194 Gr.2H Sermagard Coated

Maximum Allowable Working Pressure At Temperature (Note 2)

Deg.F	32	100	150	200	250	300	350	400	450
Deg.C	0	38	66	93	121	149	177	204	232
Psi	5000	5000	4910	4820	4730	4640	4550	4460	4370
Bar	345	345	339	332	326	320	314	308	301

Material : **Carbon Steel High Strength**
Rating : **API 5000**
Service: **Refer to Class index**
Corrosion Allow. : **3.0 mm**
Design Code : **ASME B31.3**

PIPING CLASS **GC1**

APPENDIX 30

Văn bản này được xác thực tại https://eoffice.vietsov.com.vn với số định danh: 627/25-CV-XDM/NIPI

			Nominal Diameter, in	1/2	3/4	1	1.1/2	2	2.1/2	3	4	6	8	Notes
			Nominal Size of Valve, in	Not Specified in API 6A				2.1/16	2.9/16	3.1/8	4.1/16	7.1/16	9	
Valve Code	Valve Type	Description	Rating	End Conn.										
BAG5BG	Ball Valves	Full Bore	API 5000	RTJ Flanged				Trunnion, Gear OP.						3
BAG5DG		Reduced Bore	API 5000	RTJ Flanged				Trunnion, Gear OP.						3
GLG5FH	Globe Valves		API 5000	RTJ Flanged						← Rising Stem OS & Y, Handweel				3
GLG5FG										Rising Stem OS & Y, Gear OP				3
GAG5FH	Gate Valves	Solid Wedge	API 5000	RTJ Flanged						← Rising Stem OS & Y, Handweel				3
GAG5LG		Flexible Wedge	API 5000	RTJ Flanged						Rising Stem OS & Y, Gear OP.				3
CHG5QN	Check Valves	Swing	API 5000	RTJ Flanged				Horizontal & Vertical type						3
CHG5RN		Wafer	API 5000	RTJ Flanged				Dual Plate Type						3
DBG5EG	Double Block and Bleed Valves		API 5000	RTJ Flanged				Trunnion, Gear OP.						3
MVG5IT	Monoflange Valves	Integral Body	API 5000	RTJ Flanged x NPTF ends.						← Double Block & Bleed, T-bar OP.				3

APPENDIX 30

Maximum Allowable Working Pressure At Temperature (Note 2)									
Deg.F	32	100	150	200	250	300	350	400	450
Deg.C	0	38	66	93	121	149	177	204	232
Psi	5000	5000	4910	4820	4730	4640	4550	4460	4370
Bar	345	345	339	332	326	320	314	308	301

Material : **Carbon Steel High Strength**
Rating : **API 5000**
Service: **Refer to Class index**
Corrosion Allow. : **3.0 mm**
Design Code : **ASME B31.3**

PIPING CLASS **GC1**

Văn bản này được xác thực tại https://eoffice.vietsov.com.vn với số định danh: 627/25-CV-XDM/NIPI

BRANCH CONNECTIONS

1 Equal Tee BW.
2 Reducing Tee BW.
3 Weldolet

	Nominal Diameter, in	BRANCH SIZE 1/2	3/4	1	1.1/2	2	2.1/2	3	4	6	8	Notes
H	8	3	3	3	3	3	3	3	2	2	1	
E	6	3	3	3	3	3	2	2	2	1		
A	4	3	3	3	3	2	2	2	1			
D	3	3	3	3	3	2	2	1				
E	2.1/2	3	3	3	3	2	1					
R	2	3	3	3	2	1						
S	1.1/2	2	2	2	1							
I	1	2	2	1								
Z	3/4	2	1									
E	1/2	1										

NOTES :

1. Screwed connections shall be NPT taper/ taper combination in accordance with ASME B1.20.1.
2. The maximum working pressure of the flange will be reduced by a factor of 1.8% for each 50°F increase in temperature above 100°F to a maximum of 450°F. The following table gives the maximum working pressure as a function of temperature.
3. Refer to data sheet for Manual Valves: VSP-NIPI-TYP-TS-PI1-DS

APPENDIX 30

Maximum Allowable Working Pressure At Temperature (Note 2)									
Deg.F	32	100	150	200	250	300	350	400	450
Deg.C	0	38	66	93	121	149	177	204	232
Psi	5000	5000	4910	4820	4730	4640	4550	4460	4370
Bar	345	345	339	332	326	320	314	308	301

Material : **Carbon Steel High Strength**
Rating : **API 5000**
Service: **Refer to Class index**
Corrosion Allow. : **3.0 mm**
Design Code : **ASME B31.3**

PIPING CLASS **GC1**

Văn bản này được xác thực tại https://eoffice.vietsov.com.vn với số định danh: 627/25-CV-XDM/NIPI

PIPING MATERIAL CLASS SPECIFICATION: HC1 - API 10000#

																											Notes
			Nominal Diameter, in	1/2	3/4	1	1.1/2	2	2.1/2	3	4																
			ASME Schedule	XXS	XXS	XXS	XXS	XXS	XXS	XXS	-																
			Wall Thickness, mm	7.47	7.82	9.09	10.15	11.07	14.02	15.24	20																
Description		End Conn.	Sch./Rating	Standard																							
Pipe	Seamless	BE		ASME B36.10M	API 5L Gr.X60																						
Elbow	LR 90 Deg.	BW	As Pipe	ASME B16.9	ASTM A860-WPHY60																						
Elbow	LR 45 Deg.	BW	As Pipe	ASME B16.9	ASTM A860-WPHY60																						
Equal Tee		BW	As Pipe	ASME B16.9	ASTM A860-WPHY60																						
Reducing Tee		BW	As Pipe	ASME B16.9	ASTM A860-WPHY60																						
End Cap		BW	As Pipe	ASME B16.9	ASTM A860-WPHY60																						
Eccentric Reducer		BW	As Pipe	ASME B16.9	ASTM A860-WPHY60																						
Concentric Reducer		BW	As Pipe	ASME B16.9	ASTM A860-WPHY60																						
Concentric Swage		BLE/PSE	As Pipe	MSS SP-95	ASTM A694-Gr.F60																						
Eccentric Swage		BLE/PSE	As Pipe	MSS SP-95	ASTM A694-Gr.F60																						
Concentric Swage		PBE	As Pipe	MSS SP-95	ASTM A694-Gr.F60																						
Eccentric Swage		PBE	As Pipe	MSS SP-95	ASTM A694-Gr.F60																						
Plug Hex Head		THR'D	6000#	ASME B16.11	ASTM A694-Gr.F60																						
Nipple, 100mm length		PBE	As Pipe	ASME B36.10M	API 5L Gr.X60																						
Nipple, 100mm length		TBE	As Pipe	ASME B36.10M	API 5L Gr.X60																						
Weldolet		BW	As Pipe	MSS SP-97	ASTM A694-Gr.F60																						

APPENDIX 31

Maximum Allowable Working Pressure At Temperature (Note 2)									
Deg.F	32	100	150	200	250	300	350	400	450
Deg.C	0	38	66	93	121	149	177	204	232
Psi	10000	10000	9820	9460	9280	9199	8929	8740	8560
Bar	689	689	677	652	640	634	616	603	590

Material : **Carbon Steel High Strength**
Rating : **API 10000**
Service: **Refer to Class index**
Corrosion Allow. : **3.0 mm**
Design Code : **ASME B31.3**

PIPING CLASS **HC1**

Văn bản này được xác thực tại https://eoffice.vietsov.com.vn với số định danh: 627/25-CV-XDM/NIPI

																							Notes
		Nominal Diameter, in		1/2	3/4	1	1.1/2	2	2.1/2	3	4												
		Nominal Size of Flange, in		Not Specified in API 6A				1.13/16	2.1/16	2.9/16	4.1/16												
Description	End Conn.	Sch./Rating	Standard																				
Flange - Weld Neck	BW	API 10000	API 6A Type 6BX					ASTM A694-Gr.F60 Bore to match pipe															4
Flange - Blind		API 10000	API 6A Type 6BX					ASTM A694-Gr.F60 Bore to match pipe															
Spade/ Spacer		API 10000	API 6A Type 6BX					ASTM A694-Gr.F60															
Gasket		API 10000	API 6A Type BX					Type R Pressure energized RTJ Soft Iron, Octagonal, max 56 HRB Hardness number															
Stud bolts fully threaded			ASME B18.2.1/ B18.2.2					ASTM A193 Gr.B7/ A194 Gr.2H Sermagard Coated															

APPENDIX 31

Maximum Allowable Working Pressure At Temperature (Note 2)									
Deg.F	32	100	150	200	250	300	350	400	450
Deg.C	0	38	66	93	121	149	177	204	232
Psi	10000	10000	9820	9460	9280	9199	8929	8740	8560
Bar	689	689	677	652	640	634	616	603	590

Material : **Carbon Steel High Strength**
Rating : **API 10000**
Service: **Refer to Class index**
Corrosion Allow. : **3.0 mm**
Design Code : **ASME B31.3**

PIPING CLASS **HC1**

Văn bản này được xác thực tại https://eoffice.vietsov.com.vn với số định danh: 627/25-CV-XDM/NIPI

			Nominal Diameter, in	1/2	3/4	1	1.1/2	2	2.1/2	3	4	Notes
			Nominal Size of Valve, in	Not Specified in API 6A				1.13/16	2.1/16	2.9/16	4.1/16	
Valve Code	Valve Type	Description	Rating	End Conn.								
BAH5BG	Ball	Full Bore	API 10000	RTJ Flanged				Trunnion, Gear OP.				3
BAH5DG	Valves	Reduced Bore	API 10000	RTJ Flanged				Trunnion, Gear OP.				3
GLH5FH	Globe		API 10000	RTJ Flanged					← Rising Stem OS & Y, Handweel			3
GLH5FG	Valves							Rising Stem OS & Y, Gear OP →				3
GAH5FH	Gate	Solid Wedge	API 10000	RTJ Flanged					← Rising Stem OS & Y, Handweel			3
GAH5LG	Valves	Flexible Wedge	API 10000	RTJ Flanged				Rising Stem OS & Y, Gear OP →				3
CHH5QN	Check	Swing	API 10000	RTJ Flanged				Horizontal & Vertical type				3
CHH5RN	Valves	Wafer	API 10000	RTJ Flanged				Dual Plate Type				3
DBH5EG	Double Block and Bleed Valves		API 10000	RTJ Flanged				Trunnion, Gear OP.				3
MVH5IT	Monoflange	Integral Body	API 10000	RTJ Flanged x					← Double Block & Bleed, T-bar OP.			3
	Valves			NPTF ends.								

APPENDIX 31

Maximum Allowable Working Pressure At Temperature (Note 2)									
Deg.F	32	100	150	200	250	300	350	400	450
Deg.C	0	38	66	93	121	149	177	204	232
Psi	10000	10000	9820	9460	9280	9199	8929	8740	8560
Bar	689	689	677	652	640	634	616	603	590

Material : **Carbon Steel High Strength**
Rating : **API 10000**
Service: **Refer to Class index**
Corrosion Allow. : **3.0 mm**
Design Code : **ASME B31.3**

PIPING CLASS **HC1**

Văn bản này được xác thực tại https://eoffice.vietsov.com.vn với số định danh: 627/25-CV-XDM/NIPI

BRANCH CONNECTIONS

1 Equal Tee BW.
2 Reducing Tee BW.
3 Weldolet

Nominal Diameter, in	BRANCH SIZE								Notes
	1/2	3/4	1	1.1/2	2	2.1/2	3	4	
4	3	3	3	3	2	2	2	1	
3	3	3	3	3	2	2	1		
2.1/2	3	3	3	3	2	1			
2	3	3	3	2	1				
1.1/2	2	2	2	1					
1	2	2	1						
3/4	2	1							
1/2	1								

NOTES :

1. Screwed connections shall be NPT taper/ taper combination in accordance with ASME B1.20.1.
2. The maximum working pressure of the flange will be reduced by a factor of 1.8% for each 50°F increase in temperature above 100°F to a maximum of 450°F. The following table gives the maximum working pressure as a function of temperature.
3. Refer to data sheet for Manual Valves: VSP-NIPI-TYP-TS-PI1-DS

APPENDIX 31

Maximum Allowable Working Pressure At Temperature (Note 2)									
Deg.F	32	100	150	200	250	300	350	400	450
Deg.C	0	38	66	93	121	149	177	204	232
Psi	10000	10000	9820	9460	9280	9199	8929	8740	8560
Bar	689	689	677	652	640	634	616	603	590

Material :	**Carbon Steel High Strength**	PIPING CLASS	
Rating :	**API 10000**	**HC1**	
Service:	**Refer to Class index**		
Corrosion Allow. :	**3.0 mm**	Sheet 4 of 4	
Design Code :	**ASME B31.3**		

Văn bản này được xác thực tại https://eoffice.vietsov.com.vn với số định danh: 627/25-CV-XDM/NIPI

RESEARCH AND ENGINEERING INSTITUTE FOR OFFSHORE OIL AND GAS

PROJECT NAME : BK-10A WELLHEAD PLATFORM

DOCUMENT TITLE : SPECIFICATION FOR MANUAL VALVES

DOCUMENT NO. : BK1.BK10.BK10A-001-GE-PI1-SP-002

PHASE : DE

Signed by: Борозна Алексей Олегович
Date: 30.06.2025 13:47:55
Certified by: Vietsovpetro CA

Applied Document			VSP-NIPI-TYP-TS-PI1-SP-02		Rev.	0
			SCANNED	Signed by: Гайнутдинов Евгений Нурлыгалиевич Date: 30.06.2025 17:44:43 Certified by: Vietsovpetro CA	Signed by: Авдеев Андрей Сергеевич Date: 30.06.2025 17:56:26 Certified by: Vietsovpetro CA	
			Signed by: Le Thi Hằng Date: 30/06/2025 16:15:07 Certified by: Vietsovpetro CA			
			DC: L.T. HANG	ENG.MGR: GAYNUTDINOV E.N.	PRO.MGR: AVDEEV A.S.	
0	IFA	25.06.25	Signed by: Кудрицкий Илья Андреевич Date: 25.06.2025 13:49:19 Certified by: Vietsovpetro CA	Signed by: Костикин Виталий Николаевич Date: 26.06.2025 20:03:02 Certified by: Vietsovpetro CA	Signed by: Trương Minh Đức Date: 30/06/2025 14:02:49 Certified by: Vietsovpetro CA	
REV.	DES.	DATE	PREPARED: KUDRYTSKI I.A.	CHECKED: BOROZNA A.O./KOSTIKIN V. N.	DEPT.MGR: T.M. DUC	

Văn bản này được xác thực tại https://eoffice.vietsov.com.vn với số định danh: 627/25-CV-XDM/NIPI

TRACK CHANGES

No	Rev.	Content of Change	Note

Văn bản này được xác thực tại https://eoffice.vietsov.com.vn với số định danh: 627/25-CV-XDM/NIPI

TABLE OF CONTENTS

1 INTRODUCTION 4

2 ADDENDUM 4

Văn bản này được xác thực tại https://eoffice.vietsov.com.vn với số định danh: 627/25-CV-XDM/NIPI

1. INTRODUCTION

BK-10A Wellhead Platform belongs to Vietsovpetro JV. It will be located in Block 09-1, White Tiger oil field, offshore the Socialist Republic of Vietnam.

BK-10A is connected with BK-10 by a linking bridge. BK-10A is an unmanned platform with 12 slots (03 spare slots) and will be remotely controlled from the host platform BK-10 via fiber optic cable.

There will be 09 production wells on BK-10A (02 wells will be converted into water injection wells in future as planned) and 03 wells can be added in the future.

Based on the criterion of the need for production and maximizing the return on investment, BK-10A will be considered to have the minimum facilities. The full well stream of BK-10A will be gathered together with the produced fluid of BK-10 and BK-1, preliminarily separated on BK-10 and then transferred to CPP-2.
The scope of this project is detailed engineering design for the BK-10A Wellhead Platform, Linking Bridge and modification of BK-10.

Location of BK-10A and related platforms as below.

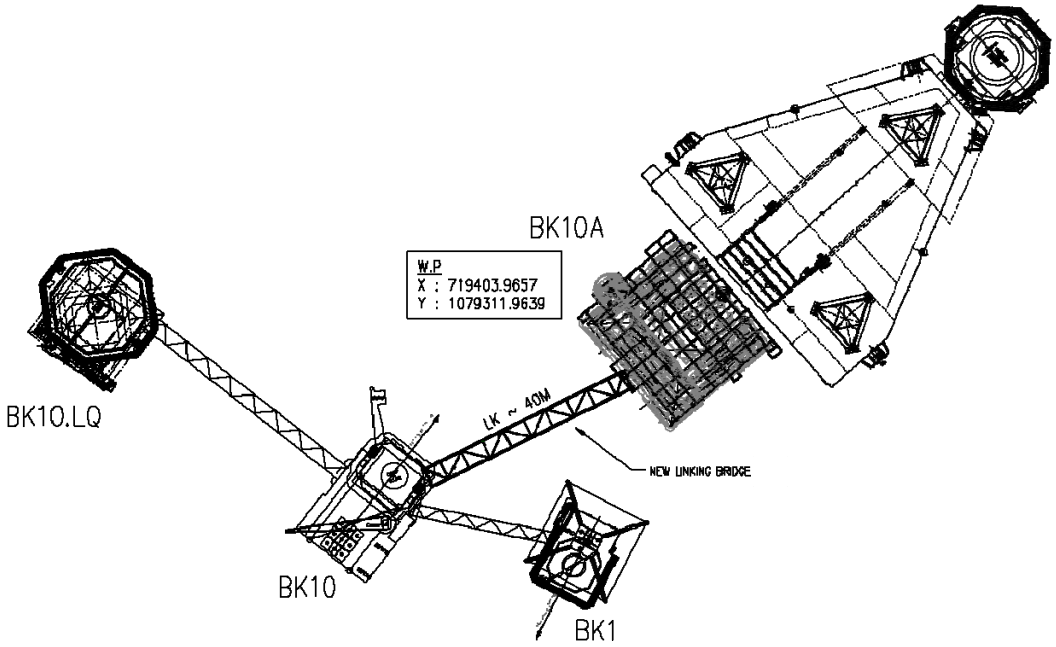

Figure 1: Location of the BK-10A Wellhead Platform and related platforms

2. ADDENDUM

This document uses the Typical Engineering Documentation for this Project. However, some design intends or requirements may require to be revised to fit with Project's purpose. This section lists changes in the applied typical documents, originating in Typical Engineering Documentation for any reason including those indicated in Table 1. These changes are identified in this Addendum to the applied

Văn bản này được xác thực tại https://eoffice.vietsov.com.vn với số định danh: 627/25-CV-XDM/NIPI

typical document, identifying the document and section affected and the required change.

VENDOR shall review the required changes in conjunction with the referenced document and project's engineering documents.

The type of modification shall be defined and indicated in subsequent text as follows:

- ✓ "ADD" - Indicates the following statement(s) is/are added to the Company referenced text.
- ✓ "DELETE" - Indicates the following statement(s) is/are deleted from the Company referenced text.
- ✓ "REPLACE WITH" - Indicates the following statement(s) is/are revision(s) to the Company referenced text.

Section	Current Statement or Requirement	Revised to

Note:

No changes need to be made

Văn bản này được xác thực tại https://eoffice.vietsov.com.vn với số định danh: 627/25-CV-XDM/NIPI

RESEARCH AND ENGINEERING INSTITUTE
FOR OFFSHORE OIL AND GAS

AGREED BY	APPROVED BY
Deputy General Director of Vietsovpetro	Chief Engineer of Vietsovpetro
Tran Xuan Hoang	Tran Van Vinh
07/04/2020	06/04/2020

TYPICAL ENGINEERING DOCUMENTATION

DOCUMENT TITLE : SPECIFICATION FOR MANUAL VALVES

DOCUMENT No. : VSP-NIPI-TYP-TS-PI1-SP-02

AGREED:	Name	Date
Capital Construction Department		26/3/20
Technical Production Department		27/3/2020
Material and Equipment Department		29/3/20

CONTROLLED

REV.	DESCRIPTION	DATE	PREPARED	CHECKED	CHIEF DEPART.	ENG. MANAGER	PRO. MANAGER
0	IFA	17/01/2020	L.T.DUONG	L.T.DUONG	N.T.HAI	T.D.HAI	B.T.HAN

Văn bản này được xác thực tại https://eoffice.vietsov.com.vn với số định danh: 627/25-CV-XDM/NIPI

Change Log

REV	SECTION	PAGE	CHANGE DESCRIPTION

Reference Documents

VSP-NIPI-TYP-TS-PI1-SP-01	PIPING MATERIAL CLASS SPECIFICATION
VSP-NIPI-TYP-TS-PI1-SP-04	SPECIFICATION FOR PIPING & EQUIPMENT INSULATION
VSP-NIPI-TYP-TS-PI1-SP-05	SPECIFICATION FOR PIPING FABRICATION, INSTALLATION, INSPECTION & TESTING
VSP-NIPI-TYP-GEN-AC7-SP-01	PAINTING SPECIFICATION FOR PLATFORM
VSP-NIPI-TYP-GEN-AC7-SCH-01	BASIC PAINTING SCHEDULE FOR PLATFORM

Văn bản này được xác thực tại https://eoffice.vietsov.com.vn với số định danh: 627/25-CV-XDM/NIPI

TABLE OF CONTENTS

1.0	**GENERAL**	**6**
1.1	Introduction	6
1.2	Document Purpose	6
1.3	Definition of Terms	6
1.4	Abbreviations	6
2.0	**APPLICABLE CODES, STANDARDS AND REGULATIONS**	**7**
2.1	Compliance with Specification	7
2.2	Regulations	7
2.3	Quality Assurance	7
2.4	Conflicts and Order of Precedence	8
2.5	Codes and Standards	8
2.6	Health, Safety and Environmental Regulations	12
2.7	Unit & Language	12
3.0	**DESIGN REQUIREMENTS**	**13**
3.1	General Requirements	13
3.2	Pressure and Temperature Rating	13
3.3	Pigging	14
3.4	Valve Ends	14
3.5	Position Indicator	15
3.6	Lockable Valves	15
3.7	Travel Stops	16
3.8	Handwheels and Wrenches - Levers	16
3.9	Gear operators	16
3.10	Actuator Requirements	18
3.11	Lifting Devices	19
3.12	Valve Supports	19
3.13	Additional Specific Requirement for Valves Designed in accordance with API SPEC 6A	19
4.0	**VALVE TYPES**	**20**
4.1	General Requirements	20
4.2	Ball Valves	21
4.3	Gate Valves	23
4.4	Globe Valves	23
4.5	Check Valves	24
4.6	Monoflange Valves and Double Block & Bleed Valves	25
4.7	Butterfly Valves	25

Văn bản này được xác thực tại https://eoffice.vietsov.com.vn với số định danh: 627/25-CV-XDM/NIPI

4.8	Needle Valves	26
4.9	Plug Valves	26
4.10	Hand Angle Choke Valves	27
5.0	**MATERIALS REQUIREMENTS**	**28**
5.1	General	28
5.2	Bolting	28
5.3	Bonnet to Body	29
5.4	Casting Material	29
5.5	Vent, Drain, Injection and Ancillary Connections	30
5.6	Carbon Steel Valves	30
5.7	Austenitic Stainless Steel Valves	31
5.8	Duplex and Super Duplex Stainless Steel Valves	31
5.9	Copper Alloy Valves	31
6.0	**INSPECTION AND TESTING REQUIREMENTS**	**31**
6.1	General	31
6.2	Quality Control	32
6.3	Visual Examination	32
6.4	Pressure Tests	32
6.5	Toughness Tests	34
6.6	Hardness Test	34
6.7	Special Examinations	35
6.8	Site Testing	35
6.9	Non-Destructive Testing and Inspection Requirements	35
7.0	**ACCEPTANCE**	**36**
7.1	Testing Criteria	36
7.2	Test Failure, Re-Work, Re-Test	37
7.3	Test Failure On Spot Checks	37
8.0	**DOCUMENTATION**	**37**
8.1	General	37
8.2	Certificates of Conformity	37
8.3	Material Certificates	37
8.4	Positive Material Identification	38
8.5	Pressure Tests Certificates	39
8.6	Other Tests Certificates	39
8.7	Technical Manual	39
9.0	**PRESERVATION, PACKAGING AND SHIPPING**	**39**

Văn bản này được xác thực tại https://eoffice.vietsov.com.vn với số định danh: 627/25-CV-XDM/NIPI

9.1 Marking 39
9.2 Protection of Ends 40
9.3 Painting 40
9.4 Preparation 40
9.5 Packing 41

Văn bản này được xác thực tại https://eoffice.vietsov.com.vn với số định danh: 627/25-CV-XDM/NIPI

1.0 GENERAL

1.1 Introduction

The typical engineering documentation is a set of engineering documents issued by Research and Engineering Institute (REI) that can be applied repeatly to many projects that REI involves.

The typical engineering documentation shall be agreed by related departments in Vietsovpetro and approved by Vietsovpetro, if any.

1.2 Document Purpose

This Specification, in conjunction with the other COMPANY Technical Requirements, defines the minimum acceptable requirements for the design, selection, application and procurement for valves used in the Vietsovpetro offshore facilities and for VENDOR or CONTRACTOR furnished equipment packages. This specification governs valves for piping systems provided in accordance with API Recommended Practice 14E "Design and Installation of Offshore Production Platform Piping Systems" and ASME B31.3 "Process Piping".

The P&ID's and other COMPANY Technical Specifications indicate the required piping class and valve types for use in the detail design. VENDOR/CONTRACTOR shall be solely responsible for providing complete and operable pipe, piping components and valves in full accordance with all applicable Industry Codes and Standards, Government Regulations and COMPANY Technical Requirements.

1.3 Definition of Terms

The following terms as used in this specification, assume the meanings given below:

COMPANY	**VIETSOVPETRO JOINT VENTURE (VSP)**, as the project developer and ultimate owner of the facility.
CONTRACTOR	A Contractor working under direct contract with VSP
SUB-CONTRACTOR	Obtained by a prime contractor for subcontracting works
VENDOR	Party responsible for manufacturing and/or packaging of equipment.
SUB-VENDOR	Other entity employed by Vendor to perform work and/or supply equipment.
MANUFACTURER	The company or its sub-contractors selected by the Company as Manufacturer of said material

1.4 Abbreviations

The following abbreviations are used in the document:

ANSI	American National Standards Institute
API	American Petroleum Institute
ASME	American Society of Mechanical Engineers
ASTM	American Society of Testing and Materials
BB	Bolted Bonnet
BS	British Standard
ESDV	Emergency shutdown valve
FB	Full Bore

Văn bản này được xác thực tại https://eoffice.vietsov.com.vn với số định danh: 627/25-CV-XDM/NIPI

HP	High Pressure
ISO	International Standardization Organization
LP	Low Pressure
MSS	Manufacturers Standardization Society
NA	Not applicable
NPS/DN	Nominal Pipe Size/ Nominal Diameter
NPSHa	Net Positive Suction Head Available
NPSHr	Net Positive Suction Head Required
NPT	National Pipe Thread
OD	Outside Diameter
OS & Y	Outside Screw and Yoke
PEEK	Polyetheretherketone
PR	Purchase Requisition
PR1	Performance Requirement level 1
PR2	Performance Requirement level 2
PSL	Product Specification Level
PTFE	Poly Tetra Fluoro Ethylene
PWHT	Post Weld Heat Treatment
RB	Reduced Bore
RTJ	Ring Type Joint
RPTFE	Reinforced Poly Tetra Fluoro Ethylene
SI	System International

2.0 APPLICABLE CODES, STANDARDS AND REGULATIONS

2.1 Compliance with Specification

Data Sheets, references and related documents included in the PR are an integral part of this document and as such shall be used in conjunction with this Specification.

2.2 Regulations

All manual valves shall comply with the relevant Vietnamese and international recommendations. The VENDOR shall determine what valve requires type approval by the local Vietnamese Authority and shall provide type approved equipment where necessary.

2.3 Quality Assurance

The manufacturer shall operate a quality system which ensure that the requirements of this Standard are achieved.

Manufacturer shall demonstrate compliance by providing a copy of the accredited certificate or manufacturer's quality manual.

The design, material, and workmanship employed throughout the course of the project shall be of high quality and based on the principles of ISO 9001 or equivalent standards. The VENDOR is required to operate an ISO 9001 or equivalent quality assurance system, which shall be subjected to continuous monitoring by the COMPANY.

The VENDOR shall submit with Bid, a detailed inspection and test plan specific to this scope for the review and approval of the COMPANY.

Văn bản này được xác thực tại https://eoffice.vietsov.com.vn với số định danh: 627/25-CV-XDM/NIPI

2.4 Conflicts and Order of Precedence

In case of conflict, the regulations, codes, standards and other documents referenced shall be applied in the following priority order:

- Vietnamese Government Legislation
- Project Specifications, Datasheet.
- Industry Standards
- VENDOR Codes and Working Standards

In case of conflict or discrepancies between any valves of the above codes and standards and these technical specifications, the more stringent shall apply.

All manual valves supplied shall meet the contract-specified requirements and the manufacturers' published specifications. In the event of conflict, the more stringent shall govern unless mutually agreed otherwise, by the COMPANY and the VENDOR.

2.5 Codes and Standards

The latest editions, as of the enquiry or purchase order date, of the following codes, standards, specifications and regulations are considered part of this Specification and are to be used by the VENDORs in their designs.

American Petroleum Institute (API)

API RP 14E	Design and Installation of Offshore Production Platform Piping System
API 14J	Recommended Practice for Design and Hazards Analysis for Offshore Production Facilities
API 5L	Specification for Line Pipe
API 6A	Specification for Wellhead & Chrismas Tree Equipment
API 6D/ ISO 14313	Specification for Pipeline Valves
API 6FA	Specification for Fire Test for Valves
API 6FD	Specification for Fire Test for Check Valves
API 594	Check Valves : Flanged, Lug, Wafer and Butt welding
API 589	Fire Test for Evaluation of Valve Stem Packing
API 598	Valve Inspections and Testing
API 599	Metal Plug Valves-Flanged and Welding Ends
API 600	Steel Gate Valves, Flanged and Butt welding Ends, Bolted Bonnets
API 602	Steel Gate, Globe and Check Valves for Size DN100 and smaller for Petroleum and Natural Gas Industries
API 603	Corrosion-Resistant, Bolted Bonnet Gate Valves-Flanged and Butt-Welding Ends
API 608	Metal Ball Valves-Flanged, Threaded, and Welding Ends
API 604	Ductile Iron Gates Valves Flanged Ends
API 607/ISO 10497	Fire Test for Soft Seated Quarter Turn Valves

Văn bản này được xác thực tại https://eoffice.vietsov.com.vn với số định danh: 627/25-CV-XDM/NIPI

API 608	Metal Ball Valves-Flanged, Threaded and Welding Ends
API 609	Butterfly Valves Double Flanged, Lug and Wafer Type
API 623	Steel Globe Valves—Flanged and Butt welding Ends, Bolted Bonnets
American Society of Mechanical Engineers (ASME)	
ASME B1.1	Unified Inch Screw Threads
ASME B1.20.1	Pipe Threads, General Purpose (Inch)
ASME B16.5	Pipe Flanges and Flanged Fittings (NPS ½ through NPS 24)
ASME B16.10	Face to Face and End to End Dimensions of Valves
ASME B16.11	Forged Fittings, Socket Welding and Threaded
ASME B16.20	Metallic gaskets for Pipe Flanges – Ring Joint, Spiral Wound and Jacketed
ASME B16.21	Nonmetallic Flat Gaskets for Pipe Flanges
ASME B16.24	Cast Copper Alloy Pipe Flanges and Flanged Fittings
ASME B16.25	Butt welding Ends
ASME B16.34	Valves, Flanged Threaded and Welding End
ASME B16.47	Large Diameter Steel Flanges (NPS 26 through NPS 60)
ASME B18.2.1	Square and Hexagonal Bolts and Screw
ASME B18.2.2	Square and Hexagonal Nuts
ASME B31.3	Process Piping
ASME B36.10	Welded and Seamless Wrought Steel Pipe
ASME B36.19	Stainless Steel Pipe
ASME BPVC Section V	Non Destructive Testing
ASME VIII	Boiler and Pressure Vessel Code - Division 1 and 2
ASME Section IX	Welding and brazing qualifications
ASTM American Society for Testing and Materials	
ASTM A 105	Forgings, Carbon Steel, for Piping Components
ASTM A 182	Forged or Rolled Alloy-Steel Pipe Flanges, Forged Fittings and Valves and Parts for High-Temperature Service
ASTM A 193	Alloy-Steel and Stainless Steel Bolting Materials for High-temperature Service
ASTM A 194	Carbon and Alloy-Steel Nuts for Bolts for High-pressure and High temperature Service
ASTM A 216	Carbon Steel Castings Suitable for Fusion Welding for High-Temperature Service
ASTM A 217	Martensitic Stainless Steel and Alloy Steel Castings for Pressure Containing Parts Suitable for High Temperature Service

Văn bản này được xác thực tại https://eoffice.vietsov.com.vn với số định danh: 627/25-CV-XDM/NIPI

ASTM A 320	Alloy-Steel Bolting Materials for Low-temperature Service
ASTM A 333	Seamless and Welded Steel Pipe for Low-Temperature Service
ASTM A 350 F	Forgings, Carbon and Low-Alloy Steel, requiring Notch Toughness Testing for Piping Components
ASTM A 351	Austenitic Steel Castings for High Temperature Service
ASTM A 352	Ferritic Steel Castings for Pressure Containing Parts Suitable for Low Temperature Service
ASTM A 370	Test Methods and Definitions for Mechanical Testing of Steel Products
ASTM A 388	Ultrasonic Examination of Heavy Steel Forgings
ASTM A 395	Ferritic Ductile Iron Pressure Retaining Castings for Use at Elevated Temperatures
ASTM A 453	Bolting Materials, High-Temperature, 50 to 120 ksi Yield Strength, with Expansion Coefficients Comparable to Austenitic Steels
ASTM A 488	Qualifications of Procedures and Personnel for the Welding of Steel Castings
ASTM A 564	Hot-Rolled and Cold-Finished Age-Hardening Stainless Steel Bars and Shapes
ASTM 578	Straight Beam Ultrasonic Examination of Plain and Clad Steel
ASTM A 694	Carbon and Alloy Steel Forgings for Pipe Flanges, Fittings, Valves and Parts for High-Pressure Transmission Service
ASTM A 703	Steel Castings, General Requirements, for Pressure Containing Parts
ASTM B 62	Composition Bronze or Ounce Metal Castings
ASTM B 148	Aluminum-Bronze Sand Castings
ASTM B 150	Aluminum Bronze Rod, Bar and Shapes
ASTM B 584	Copper Alloy Sand Castings for General Application
ASTM D 297	Test Methods for Rubber Products - Chemical Analysis
ASTM D 412	Test Methods for Vulcanized Rubber and Thermoplastic Elastomers -Tension
ASTM D 1414	Test Methods for Rubber 0-Rings
ASTM D 1415	Test Methods for Rubber Property – International Hardness
ASTM D 1418	Rubber and Rubber Lattices - Nomenclature
ASTM D 2240	Test Methods for Rubber Property – Durometer Hardness
ASTM E 446	Steel Castings up to 2 in. (51 mm) in Thickness
ASTM F 871	Specification for Electrodeposited Coatings on Threaded Components
ASTM E 709	Magnetic Particle Examination

Văn bản này được xác thực tại https://eoffice.vietsov.com.vn với số định danh: 627/25-CV-XDM/NIPI

ASTM E 94	Radiographic Testing

British and Euronorm Standards (BS and EN)

BS 1414	Specification for steel wedge gate valves (flanged and butt-welding ends) for the petroleum, petrochemical and allied industries
BS 1560	Steel pipe flanges and flanged fittings (nominal sizes 1/2 in to 24 in) for the petroleum industry
BS 1873	Specification for steel globe valves
BS 1868	Specification for steel check valves for the petroleum, petrochemical and allied industries.
BS 5158	Cast iron and cast steel plug valves for general purpose
BS 5159	Specification for cast iron and carbon steel ball valves for general purposes
BS EN ISO 17292	Steel ball valves for the petroleum, petrochemical and allied industries Note: Supersedes BS 5351.
BS 5352	Wedge gate, globe and check valves 50 mm and smaller for the petroleum, petrochemical and allied industries Note: Superseded by BS EN ISO 15761.
BS 5353	Specification for plug valves
BS EN ISO 10497	Part II -Testing of valves. Specification for fire type-testing requirements Note: Supersedes BS 6755.
BS EN 10213	Steel Castings for Pressure Purpose
BS EN 10222	Steel Forgings for Pressure Purpose
BS EN 12266	Industrial Valves, Testing of valves test procedures and acceptance
BS EN ISO 17292	Metal Ball Valve for the Petroleum, Petrochemical, and allied industries
EN 10204	Metallic Materials : Types of Inspection Documents

Manufacturers' Standardization Society (MSS)

MSS SP-6	Standard Finishes for Contact Faces of Pipe Flanges and connecting ends Flanges of Valves and Fillings
MSS SP-9	Spot Facing for Bronze, Iron and Steel Flanges
MSS-SP-25	Standard Marking System for Valves, Fittings, Flanges and Unions.
MSS-SP-44	Steel Pipeline Flanges
MSS-SP-45	Bypass and Drain Connections
MSS SP-53	Quality Standard for Steel Castings and Forgings for Valves, Flanges and Fittings and other Piping Components – Magnetic Particle Examination Method

Văn bản này được xác thực tại https://eoffice.vietsov.com.vn với số định danh: 627/25-CV-XDM/NIPI

MSS-SP-54	Quality Standard for Steel Casting for Valves, Flanges and Fitting and Other Piping Components – Radiographic Examination Method.
MSS-SP-55	Quality Standard for Steel Castings for Valves, Flanges and Fittings and Other Fittings Components – Visual Method for Evaluation of Surface Irregularities.
MSS-SP-61	Pressure Testing of Valves
MSS-SP-67	Butterfly Valves
MSS SP-72	Ball Valves with Flanged or Butt-Welding Ends for General Service
MSS SP-78	Cast iron plug valves, flanged and threaded ends
MSS SP 80	Bronze Gate, Globe, Angle and Check Valves
MSS SP 85	Gray Iron Globe & Angle Valves, Flanged and Threaded Ends
MSS-SP-96	Guidelines on Terminology for Valves and Fittings
MSS-SP-108	Resilient-seated cast iron-eccentric plug valves
MSS-SP-110	Ball Valves Threaded, Socket-Welding, Solder Joint, Grooved and Flare Ends.
MSS-SP-118	Compact Steel Globe & Check Valves Flanged, Flangeless, Threaded & Welding Ends (Chemical & Petroleum Refinery Service)
MSS-SP-120	Flexible Graphite Packing System for Rising Stem Steel Valves (Design Requirements)
MSS-SP-121	Qualification Testing Methods for Stem Packing for Rising Stem Steel Valves
NACE MR-01-75	Sulphide Stress Cracking Resistant Metallic Materials for Oil field Equipment
ISO-5208	Industrial valves - Pressure testing of metallic valves
ISO-15848-1	Industrial valves — Measurement, test and qualification procedures for fugitive emissions — Part 1: Classification system and qualification procedures for type testing of valves
ISO-15848-2	Industrial valves — Measurement, test and qualification procedures for fugitive emissions — Part 2: Production acceptance test of valves

2.6 Health, Safety and Environmental Regulations

The VENDOR shall be responsible for ensuring that the goods and services supplied meet all applicable national and international codes/regulations on the health, safety and environmental requirements.

2.7 Unit & Language

All units shall be expressed in SI (for ease of the users) unless otherwise noted.

All unit of pressure given in this standard are gauge pressure, unless otherwise stated.

The VENDOR shall submit all documentation and correspondence in the English language.

Văn bản này được xác thực tại https://eoffice.vietsov.com.vn với số định danh: 627/25-CV-XDM/NIPI

3.0 DESIGN REQUIREMENTS

3.1 General Requirements

The mechanical designs shall be the responsibility of the VENDOR.

All valves shall be suitable for service conditions shown in the data sheets. Additional requirements for valves designated with individual tag numbers shall be as per the specific data sheet. Valves designs shall adequately provide for the corrosion allowance indicated on the piping class data sheet against the respective piping class.

Ratings for valves detailed in the Piping Material Class Specification and Valve Data Sheets are those contained in ASME B16.5 and ASME B16.34 for standard class flanged end valves.

References in this specification to API Class 10000 psi flange rating refer to API 6A.

The VENDOR shall give full details of the technical changes and deviations from specifications for the COMPANY's review where the standard or preferred design option does not meet any defined requirements in this Specification.

The VENDOR shall be responsible for ensuring that all components including those that have not been manufactured by them meet this Specification and are compatible with each other and the process medium in all respects.

All materials shall be conformed to ASME, ASTM, API, BS, MSS-SP standards and the relevant valve data sheets. Design and Testing, Erection, Fabrication shall be conformed to ASME B31.3 "Process Piping" and API RP 14E "Recommended Practice for Design and Installation of Offshore Production Platform Piping Systems". Only latest editions of standards mentioned herein shall be used unless noted otherwise.

Standard sheets which are a part of this specification show material to be used. Each standard shall be used within associated pressure/ temperature range.

All materials and their dimensions, tolerances, chemical composition, physical properties, heat treatment, hydro test and other testing and markings shall be conform to the codes and standards specified in the requisition. Deviation(s), if any, shall be clearly highlighted in the offer.

All forgings made to ASTM A105 shall be supplied normalized.

Testing Reports, Testing Procedures shall be supplied for all mandatory tests as per the applicable material specifications. Test reports shall also be furnished for any supplementary tests as specified.

3.2 Pressure and Temperature Rating

Valve shall be designed for the process static conditions without operation.

Valve shall be designed to be operated for the full range of operating temperature conditions at the relative maximum pressure respecting the ASME B16.34 pressure-temperature rating.

Selection of the material classification for a given piping system, shall be in accordance with the Piping Material Class Specification, based upon the intended service and the design pressure and temperature ranges of the system.

Valve datasheet shall specify minimum and maximum design temperature.

Văn bản này được xác thực tại https://eoffice.vietsov.com.vn với số định danh: 627/25-CV-XDM/NIPI

3.3 Pigging

Full bore valves installed on piggable line shall have the same bore all through the valve, including transition piece and pup piece as far as applicable and capable of being pigged and scraped regularly without damage to the seats.

The bore shall match the internal pipeline diameter and shall present as smooth a profile as possible ensuring uninterrupted free passage.

The valve datasheet shall specify the inside diameter.

3.4 Valve Ends

3.4.1 Flanged Ends

The flanges shall be of the type required for the piping class to which the valve belongs and in conformity with ASME B16.5 or ASME B16.47 and API 6A. End flange design shall comply with the requirements of Piping Material Class Specification.

All flange faces, Class 150 to 600, shall be raised face type suitable for spiral wound gasket; Class 900 to 2500 and API 10000 shall be ring type joint. For ESDV, valve ended class 600 will be with RTJ flange type.

Wherever the flange raised face finish is not mentioned, it shall be serrated spiral or concentric with average roughness of 3.2 to 6.3 µm or 125 to 250 µin. For bronze valves the average roughness shall not exceed 3.2 or 125 µin. Gasket side wall contact surface for ring type joints shall not exceed roughness of 1.6 µm or 63 µin.

Flange with weld repairs to valves body are not permitted and shall not be allowed, and the goods shall be replaced by the others which more suitable.

Valve end connections shall be designed to allow heavy series nuts to be used (ASME B18.2.2), for the connections allowing for at least three threads to protrude the nut without contacting other valve body parts or bolting.

Valve flanged ends shall be integral with valve body forging or casting. Weld on flanges shall not be permitted. Flange holed shall not be centered on the vertical or horizontal axis of the flanges.

3.4.2 Welding Ends

The extension pieces (pup pieces) shall be considered as an integral part of the valve.

Valves requiring welded ends shall be supplied complete from manufacturer or his designated sub-contractor. This is to ensure welding compatibility and body or seal performance.

If pup piece is to be welded to a valve by manufacturer's sub-contractor, the sub-contractor shall complete both the following:

- Advice the party welding the pup pieces on to the valve body of the maximum allowable body temperature during welding and any subsequent post weld heat treatment required.
- Approve the qualified welding procedure.

Pup-pieces material shall be supplied in accordance with the relevant piping or pipeline material class. Any other option shall be clarified by the purchaser.

The valve data sheet will specify the lengths of pup pieces and transition pieces. The valve manufacturer will define necessary extra length to adapt the end caps and allow valve testing with full end thrust effect.

Văn bản này được xác thực tại https://eoffice.vietsov.com.vn với số định danh: 627/25-CV-XDM/NIPI

Butt-welding ends of valves shall comply with ASME B16.25 unless otherwise specified, and their bores shall match those of the pipes to which they are connected.

All butt-welding end valves shall be supplied with pup pieces and where necessary transition pieces to allow for transition between the valve body (material grade and thickness) and the adjacent pipe (material grade and thickness) to which the valve is intended to be connected.

The total length of the pup and transition pieces (including pup piece and transition piece, or pup piece alone if no transition piece is found necessary) shall be, on each side, equal to a minimum of twice the valve port diameter, unless otherwise agreed.

For pup and transition pieces here above defined, exceeding 1 meter, the length will be fixed by the valve data sheet.

The pup pieces and the transition pieces shall be supplied and welded by the valve manufacturer and under its responsibility.

The pup pieces and transition pieces shall be welded to the valve before the valve internals are installed.

Both pup pieces and transition pieces shall meet the internal bore requirement of the adjacent pipe. The thickness and material grade of the pup pieces shall be the same as the adjacent pipe.

3.4.3 Threaded

Threaded valve ends shall be tapped in accordance with ASME B1.20.1 and B16.11.

Minimum wall thickness for threaded ends shall be in accordance with ASME B16.34 or ASME B16.11 unless otherwise agreed.

3.4.4 Valves Installed Between Flanges

The ends of "Wafer" type valves shall comply with API 594 for check valve and API 609 for butterfly valves.

The contact faces of check valves for which separate gaskets are specified shall receive the same finish machining as the contact faces of the flanges between which these valves will be installed. This flange finish facing is specified in the relevant piping material class.

3.5 Position Indicator

Ball position indicator shall not be capable of incorrect fitting to falsely indicate the valve position.

Operators position indicator shall be directly associated with actual stem or port position and shall be visible at all time under normal operation.

Ball valves with wrench or lever operators shall have permanently marked position indicator (arrows) to indicate the "OPEN" and "CLOSE" position of the valve. Local position for "OPEN" (aligned parallel with the pipe axis) and for "CLOSE" (aligned perpendicular to the pipe axis) shall be clearly recognizable on each valve.

3.6 Lockable Valves

Manual valves shall be supplied with brackets, locking plates or other devices to allow the valves to be locked in the open or closed positions, by the use of a padlock. Special locking requirements will be noted on the Valve Data Sheets.

Design and efficiency of the locking device shall be independent of the installation position of the valves.

Văn bản này được xác thực tại https://eoffice.vietsov.com.vn với số định danh: 627/25-CV-XDM/NIPI

Chain locking device design is not allowed.

3.7 Travel Stops

Valve shall be provided with travel stops on the valve or operator and they shall locate the position of the obturator in the fully open and closed position.

The travel stops shall not affect the drive train components and the sealing capability of the valve.

Valves fitted with gearboxes or actuators shall be furnished with travel stops located only on the operators.

3.8 Handwheels and Wrenches - Levers

For valves operated manually, the maximum force required under design and test conditions, when applied at the rim of the handwheel or lever, shall not exceed 360 N. This applies to seating, unseating, and operating at maximum pressure of valve pressure class at the fully operating temperature range including ambient temperature.

The maximum dimensions of handwheel shall be according to requirement of API Spec 6D. Handwheel diameter(s) shall not exceed 800 mm (32 in.). Spokes shall not extend beyond the perimeter of the hand-wheel. Wrench length shall not exceed twice the face-to-face length of the valve.

Vendor drawing for each valve shall provide the length of the lever, measured from the centerline of the valve stem to the extreme end of the lever, stated in millimeters.

Drive shall be suitable for any orientation of operation, horizontal to vertical up.

Unless otherwise agreed wrench for valves made of corrosion resistant alloy shall be in 316 stainless steel material. Grey cast iron handwheel shall not be allowed.

Wrench and hand-wheel shall be made out of solid material, suitable for the environmental conditions. Hollow components shall not be allowed.

Handwheel material construction shall be:

- Malleable cast iron to BS 6681 Gr.B 32-10 or to ASTM A602 Gr.M3219;
- Spheroidal graphite / nodular graphite cast iron to BS 2789 Gr. 420/12 or to ASTM A536 Gr. 65-45-12

Wrench lever material for ball valve:

- Malleable cast iron to BS 6681 Gr.B 32-10 or to ASTM A602 Gr.M3210;
- Carbon steel to BS EN 10025 Gr. S2 75J0 or ASTM A283 Gr.D as minimum;

3.9 Gear operators

Gear operators shall be supplied as a minimum with all manually operated valves with a breakout torque not exceeding 445 Newtons at full ASME or API rated differential on a 610 mm maximum length lever (the distance used for calculating the torque shall be 559 mm). Gear operators shall be sized such that its output torque is at least 1.5 times the maximum required operating torque of the valve and shall be suitable for operation in a marine environment. The gear ratio shall be maximum 1:60 for valves NPS 8 and smaller or maximum 1:120 for NPS 10 and larger. Gear operator shall be self locking and be provided with a position indicator.

Gear operator shall be so designed to operate effectively with the maximum differential pressure across the closed valve equal to cold non-shock pressure rating.

Văn bản này được xác thực tại https://eoffice.vietsov.com.vn với số định danh: 627/25-CV-XDM/NIPI

Gear operators shall be heavy-duty type and shall be weatherproof by total enclosure suitable for the intended environment. Gearboxes shall be sealed, and lubricated for life, and shall be suitable for minimum and maximum environmental temperatures it will be expose during the construction phase and in the operational installation.

Only steel or ductile iron shall be used for gearbox components (including hand-wheel) material. Grey cast iron is not acceptable.

Top cover shall give easy access for inspection and maintenance of the mechanism. Top cover sealing shall be made by means of a removable continuous sealing gasket. Sealing by means of a bonded joint is not acceptable.

Gear operators for gate and globe valves shall be bevel types unless spur type are specifically stated in the requisition. Both bevel and spur gear operators shall be the type with 4 or 8 bolt mountings which allows them to be orientated on site any of 0° to 90° positions.

Gear operated butterfly valves shall be provided with worm gear operators, or with scotch yoke operators. Any other mechanism design shall be submitted to the COMPANY for approval. Gear hand-wheel shall be located on the opposite side of any vent and drain connections unless otherwise specified.

Gear handwheel shall be located on the opposite side of the valve vent and drain connections unless otherwise specified.

Identification of gear boxes shall include the name of the manufacturer, the gearbox model reference, the maximum input and output torques and the serial number as a minimum. Marking shall remain visible for the service life.

For all valves fitted with manual gear operators, Manufacturer shall submit with its quotation suitable drawings with valve Tag showing the main assembly dimensions and weight along with the gear operator model number.

Gear boxes shall be fitted with one or more easily accessible standard grease nipples to enable the lubricant to be renewed while the valve and gear box are in service.

The drawing for each gear operator shall show and identify the grease nipples and shall included the name and type of lubricant that can be used.

Gear operators shall be required, regardless of break-out torque, as follows unless noted otherwise::

Manual Valve Type	Valve pressure class	Gear Operator Requirement
Gate Valves	150# 300# 600# 900# 1500# 2500# 10000#	14" NPS and larger 10" NPS and larger 8" NPS and larger 6" NPS and larger 4" NPS and larger 3" NPS and larger 2" NPS (1 13/16")and larger
Ball Valves & Double Block and Bleed valves (ball type) - Floating or Trunnion mounted type	150# 300# 600# 900# 1500# 2500# 10000#	8" NPS and larger 8" NPS and larger 6" NPS and larger 4" NPS and larger 3" NPS and larger 1 1/2" NPS and larger 2" NPS (1 13/16")and larger

Văn bản này được xác thực tại https://eoffice.vietsov.com.vn với số định danh: 627/25-CV-XDM/NIPI

Manual Valve Type	Valve pressure class	Gear Operator Requirement
Globe and Plug Valves	150#	8" NPS and larger
	300#	8" NPS and larger
	600#	6" NPS and larger
	900#	4" NPS and larger
	1500#	3" NPS and larger
	≥ 2500#	3" NPS and larger
Butterfly Valves	150#	8" NPS and larger
	300#	8" NPS and larger
	600#	6" NPS and larger

Gear operator shall be supplied complete with handwheels with position indicators for open / close positions and with limit stops. The limit stops are not applicable for gate and globe valves.

For Gate/ Globe Valves	Totally enclosed bevel gear in grease case with grease nipples/ plugs.
For Ball Valves	Totally enclosed helical worm or combination of helical worm and spur gear in grease case with grease nipples/ plugs.

3.10 Actuator Requirements

Actuated valves shall comply with the relevant instrumentation general and/or particular standards.

Actuator assembly onto the valve shall only allow a single possible actuator orientation. This position is set at time of valve functional testing at manufacturer premises and shall be easily identified in case of any future actuator reassembly.

Assembly of the actuator to the valve stem shall be such that the driving train is permanently protected from any water or solid particle ingress, or from icing.

Structural assembly between the actuator and the valve shall be designed for the external loadings, permanent (actuator weight, control panel, etc.) or occasional loads such as wind load or blast effect in the site environmental conditions for the valve as installed on site, i.e. vertical or horizontal.

All bolted flanged connections of the mounting kit shall include dowel pin(s) on valve and also actuator side. Bolts shall not be subject to any shearing loading resulting from the actuator or the valve installation position, or from external loadings applied on the assembly.

For each actuated valve (i.e. each item), the detailed torque table shall be completely by the valve Manufacturer and under its responsibility, based on information collected from the actuator Manufacturer. This must be done both at the bid stage (i.e. these tables must be attached to the technical bid documents) and after the purchase order is awarded (i.e. these tables become part of the design documents which are required to receive COMPANY's approval together with drawings, bill of materials, calculation notes, etc.).

Differential pressure shall be addressed by the valve data sheet and shall correspond to the most demanding situation that the valve might face during testing, installation start-up or in operation.

The maximum actuator output torque (at the maximum supply pressure or maximum electrical supply) shall not exceed the maximum allowable torque on both the valve and actuator stems and drive train components (including stem extensions).

Văn bản này được xác thực tại https://eoffice.vietsov.com.vn với số định danh: 627/25-CV-XDM/NIPI

The actuator shall be capable to operate the valve at the minimum supply pressure of the actuator, under the maximum differential pressure applied on the valve. In this case, the safety factor of the actuator output torque over the valve torque requirement shall be a minimum of 1.3 in all operating cases of the valve, at any angle/travel along the valve stroke.

3.11 Lifting Devices

Lifting lugs shall be provided for valves of NPS 8 (DN 200) and above. Valves requiring lifting lugs shall be provided with permanent lift lugs.

Design of lugs shall consider complete assembly weight and safe handling inclusive of the actuator (or gear box).

Positions of lifting lugs on valves shall allow for safe handling operations of the valve fully equipped with its operators as far as applicable.

Specific additional lugs shall be provided when valves are installed with the stem in horizontal position.

Lifting points on gearbox or actuator shall never be used for lifting the valve.

Lifting lug material shall be same material type as valve body, except that 316 stainless steel material may be used in addition on valves of duplex stainless steel, austenitic stainless steel and nickel alloys.

For wafer type valves (butterfly and check), eyebolts can also be used provided that they meet the above material requirement and that the threaded area of the eyebolt is not less than 1-1/2 bolt diameter.

3.12 Valve Supports

As a minimum, valves supports (legs or saddles) shall be supplied and installed by valve Manufacturer on valves weighting more than 500 kg.

Valve supports shall be designed for the valve full of water, equipped with its actuator (or gear box), excluding any other kind of loading. Such supports are not intended to be for line support purpose unless otherwise specified.

Valve support material shall be of same type as for the valve body. For stainless steel and nickel alloys valve body materials, lifting lug material SS316 type as a minimum is required.

3.13 Additional Specific Requirement for Valves Designed in accordance with API SPEC 6A

Valves shall satisfy requirements (material, testing, and quality control) in accordance with the Product Specification Level (PSL) 3 and PSL 3G for valves in gas service application, unless otherwise agreed.

Only valves qualified in accordance with API SPEC 6A Appendix F shall be considered: PR1 or PR2 qualification shall be considered for manual valves, PR2 qualification shall be considered for actuated valves.

PR1 and PR2 valves qualifications shall be presented to the purchaser for a complete assessment.

Full-opening and reduced-opening valve bores shall be in accordance with API SPEC 6A unless otherwise agreed.

Valves shall be designed at the maximum rated working pressure determined in accordance with API SPEC 6A clause 4.2.1.1, unless otherwise agreed.

Văn bản này được xác thực tại https://eoffice.vietsov.com.vn với số định danh: 627/25-CV-XDM/NIPI

Pressure-temperature rating shall be in accordance with API SPEC 6A unless otherwise agreed

Bolting allowable stress shall never exceed the allowable stress defined by ASME BPVC Section VIII Div 2 for the maximum rated working pressure.

Bolt allowable stresses govern all applicable valve loadings and combinations of loading including gasket pre-stressing loads, end thrust loads etc.

Preload stress of bolting shall never exceed 50% of the minimum specified yield stress of bolts.

Pure axial pre-tensioning of bolts shall be preferred to other processes inducing transverse parasitic loading.

4.0 VALVE TYPES

4.1 General Requirements

Valves shall be designed, manufactured, inspected and marked as per design codes and standards indicated in the respective valve specification sheets. Any conflict between the requisition, enclosures, specification sheets and referred standards and codes shall be brought to the notice of the COMPANY for clarifications, but generally spec sheets and enclosures of the requisition including subject notes shall govern. No deviation to specifications and standards shall be permitted. The approval of VENDOR drawings shall be valid only for design features.

Valve body thickness, wherever not specified in the standard, shall be as per ASME B16.34.

Socket welded end valves with non-metallic seats or seals shall be provided with 100 mm long nipples having material and thickness equivalent to that specified in the Piping Materials Specification. These nipples shall be welded into the valve and stress relieved by Manufacturer on both ends before fitting / packing the seats and seals.

Valve body / bonnet shall be forged / cast as specified. Forging are acceptable in place of casting but not vice-versa.

If an overlaid weld deposit is used for the body seat ring seating surface, the seat ring base material shall be at least equal to the corrosion resistance the material of the shell.

Stem shall be forged or machined from forged / rolled bar. No casting is permitted; however integral stem of cast stainless steel ball valve is acceptable.

The seat/ packing seat material for the soft seated valves shall be suitable for the pressure / temperature ratings.

All ball, check, gate and globe valves shall be field repairable. Balls, discs, seal and seats shall be replaceable without requiring welding or cutting.

All valves shall be manufactured from casting or forgings. Plate fabrication is not permitted.

Weld repairs to valves are not permitted and shall not be allowed, and the goods shall be replaced by the others which more suitable.

All flanged valves shall be integrated. Welded-on flanges are not permitted without approval from the COMPANY.

Văn bản này được xác thực tại https://eoffice.vietsov.com.vn với số định danh: 627/25-CV-XDM/NIPI

All valves that maybe operated below -20°C shall be provided with an extended bonnet and be subject to a low temperature acceptance test. Minimum bonnet extension shall be as per table given below:

Valve Size NPS	1/2" - 1"	1.1/2"- 2"	3" - 4"	6" - 8"	10" - 12"	≥ 14"
Bonnet Extension (mm)	100	125	150	175	200	250

4.2 Ball Valves

Ball valves shall be meet the requirements of API 6A or API 6D or BS 5351 and/or ASME B16.34.

Ball valves shall be reduced bore unless stated otherwise on the respective valve data sheets and technical requirement for the purchase of valves. Reduced Bore shall be limited to one size reduction. Valve shall be designed for bi-directional sealing. Services for which full bore ball valves shall be provided include, but shall not be limited to, the following:

- Pipeline and Flowline services (services requiring pigging devices);
- Services where minimizing pressure drop is critical;
- Pump suction services with low NPSHa, or high NPSHr;
- Compressor suction services;
- Services prone to plugging or fouling;
- Horizontal installations where full drainage through the valve required;
- Relief valve inlet/outlet service.

Manual valve shall be designed for horizontal, vertical position and all intermediate positions for bore and driving stem. Driving stem shall never be orientated downward.

Ball valves shall be floating ball type or trunnion mounted type as per following table except for emergency shutdown valves which are trunnion mounted.

NPS (inch)	**150#**	**300#**	**600#**	**900#**	**≥ 1500#**
1/2" to 1.1/2"	Floating	Floating	Floating	Floating	Trunnion
2" to 3"	Floating	Floating	Trunnion	Trunnion	Trunnion
4"	Floating	Trunnion	Trunnion	Trunnion	Trunnion
6"	Trunnion	Trunnion	Trunnion	Trunnion	Trunnion
8" to 24"	Trunnion	Trunnion	Trunnion	Trunnion	Trunnion

Actuated valves shall be exclusively be trunnion-mounted design, whatever the size or pressure class.

Ball valves 900# and above shall have double seal and bleed.

Ball valves shall be fitted with blow-out proof stems and have the body split outside the plane of the stem protrusion. Trunnion mounted balls shall be designed as double block and bleed and have automatic body cavity relief via seat at between 1.1 and 1.33 times maximum rated pressure of valve. Body cavity connection to valve shall be by means of an integral flange, when size permits. Valves with hollow ball construction or ball drilled for pressure relief are not permitted.

Văn bản này được xác thực tại https://eoffice.vietsov.com.vn với số định danh: 627/25-CV-XDM/NIPI

Cavity pressure relief of trunnion mounted ball valves shall be achieved by self-relieving seat rings that internally relieves excess pressure from the valve cavity to prevent over pressurization. No other cavity pressure relieving system is permitted

Stem seal covers shall be bolted. Valve stems shall be designed so that the stem "weak point" is outside of the valve body. When size permits valves shall incorporate stem injection facility.

If resilient seat inserts are provided, the inserts shall be capable of withstanding the maximum temperature encountered in the service application. Teflon, reinforced Teflon, PEEK, or compatible seat inserts are preferred.

Valve seat and seals in service ASME Class 900 rating and above shall be specified explosive decompression resistant.

The sealing characteristics of ball valves shall not be impaired by rapid temperature changes.

Seal constructed from Teflon are sufficient to 177°C. Other thermoplastic seal materials can be rated to temperatures in excess of 177°C, but performance is dependent upon material and seal design. Nonmetallic seals for service above 177°C must be approved by COMPANY. Stem seals containing only elastomers shall have primary and secondary seals with leak detection/sealant injection port in between. All seals shall be approved by COMPANY.

Material selection for soft seals / seats for ball valves shall be suitable for maximum differential pressure, corresponding to pressure / temperature ratings and service fluid handled on a continuous basis. The seal / seat material in valve sheets for ball valve is indicative only and VENDOR shall comply with material requirements as indicated above for all pressure / temperature ratings.

The valve stem shall not be retained by the packing gland. A shouldered stem with bottom entry shall be preferred.

Where ball valves require socket welding or seal welding of end connections, the disassembly during the installation shall not be required and the VENDOR shall provide in his proposal a by the VENDOR to avoid possible seat damage in the field. If accepted by the COMPANY, the purchase documents will include a statement for the nipples to be supplied by the valve VENDOR.

Ball valves shall not be used in throttling applications unless specifically designed for such service.

All valves DN 40 and over shall be provided with a Lock Open / Lock Close facility (Pad locks by others), and as require in data sheet of Valves.

Where fire safe requirements are specified, the valves shall be certified as fire safe and performance tested to API 607 or API 6FA or BS 6755 Part 2. The valve manufacturer shall provide test certification to verify the valve performance. Fire tests shall have been witnessed and certificates endorsed by an independent certifying agency. Existing certification is acceptable.

All ball valve designs shall include anti-static devices and meet the dimensional, design and test requirements of API 6D or BS 5351 depending on size / design. All valves shall meet the pressure/temperature rating of ASME B16.34 as a minimum.

Where valve size is not defined in API 6A, API 6D and/or ASME B16.34, the valve VENDOR shall submit to COMPANY for review and approval all the step-by-step design calculation basis of end-to-end dimension, body wall thickness, stem diameter, bonnet

Văn bản này được xác thực tại https://eoffice.vietsov.com.vn với số định danh: 627/25-CV-XDM/NIPI

thickness, minimum bolting requirements and all other calculations pertaining to the final design of the valve.

Valve design must have provision to prevent stem blowout.

All quarter-turn trunnion mounted ball valves shall have metal containment seats with thermoplastic insert and emergency stem and seat sealant injection port.

Ball valves shall be furnished with the following features:

- Steel lever handle with locking device for NPS 1½ and smaller.
- Ball valves NPS 2 and larger shall be bolted body construction.
- All valves shall be capable of being locked in the Open or Closed position.

4.3 Gate Valves

Gate valves up to DN40 shall be of forged body construction and meet the requirements of BS 5352 or API Std 602, API Std 600. Valves shall be outside screw and yoke (OS&Y), bolted bonnets, rising stem, back seated and of solid wedge construction, steel handwheels and adjustable packing.

Gate valves DN50 and larger shall be in accordance with ASME B16.10 and meet the requirements of API 6A or API 6D or BS1414 or API Std 600 and/or ASME B16.34. Valve construction shall be OS&Y, bolted bonnets, rising stem, back seated and have a solid wedge with renewable seat rings, steel handwheels and adjustable packing.

Hard faced Stellite #6 seat; and hard faced Stellite #6 disc for class 600 and higher. When hard facing is specified, the base seating material shall be of corrosion resistance equal or better than the body material.

Gate valves NPS 3 and larger shall be of the flexible wedge type except in pigging applications where through-conduit slab gates shall be used.

All gate valves NPS 4 and larger in pressure class 150 and 300, NPS 3 in pressure class 600 and above, shall be supplied with stem seal injection fittings and body drain connections.

All socket weld valves shall have high temperature packing designed for heat generated during post weld heat treatment.

Valves shall be designed as 'Reverse Acting' when stated on data sheets.

Body cavity connection to valve shall be by means of an integral flange when size permits.

Valves that require installation offset vertically shall be designed with integral guides / slab supports to prevent stem distortion.

Stem protection is required for all carbon steel gate valves where 13% chromium trims are specified. The stem shall be totally enclosed in a sleeve which shall be packed with grease.

Gate valves shall generally be in accordance with gate valve data sheets.

4.4 Globe Valves

Valves shall be designed to meet the requirements of BS 5352 or BS 1873 and ASME B16.34 and valves above DN50 shall be generally compliant to BS 5352. Valves shall be OS&Y, bolted bonnets, rising stem, replaceable seats and discs, adjustable packing, back seating stems. Screwed in seat rings shall be properly secured, swaged-rolled-pressed in seat rings are not acceptable. The disc shall be a ball type and hard faced. Seats shall also be hard faced with the seats on valves DN50 and larger being renewable.

Văn bản này được xác thực tại https://eoffice.vietsov.com.vn với số định danh: 627/25-CV-XDM/NIPI

Hard faced Stellite #6 seat; and hard faced Stellite #6 disc for class 300 and higher. When hard facing is specified, the base seating material shall be of corrosion resistance equal or better than the body material.

Valve dimensions shall meet the requirements of ASME B16.10. Valve ends shall be in accordance with the Valve Data Sheet. Pressure/temperature ratings and valve design shall meet the requirements of ASME B16.34.

Stem protection is required for all carbon steel globe valves where 13% chromium trims are specified. The stem shall be totally enclosed in a sleeve which shall be packed with grease.

Material of construction of yoke shall be at least equivalent to body / bonnet material.

All socket weld valves shall have high temperature packing designed for heat generated during post weld heat treatment.

4.5 Check Valves

Check valves shall comply with the requirements of API 594/ ASME B16.10, ASME B16.34, BS 5352, BS 1868 for all sizes. For valve sizes DN40 and smaller, spring return ball lift types shall be used. For DN50 and larger, swing type or wafer type check valves shall be used.

Ball type check valves shall be provided in services where fouling substances such as dirt, sand, weld slag or other solids would interfere with the proper operation of other types of check valves.

Gas service check valves shall be lift type (ball, piston or disc) in 2" NPS and smaller sizes and shall be spring actuated, flapper type in 3" NPS and larger sizes. Piston type check valves (BS 5352) shall be provided in services with fluids moving at high velocities or with pulsating vapor flows. Piston check valves shall be furnished with the following features: non-slam piston, bolted bonnets, spring loaded and replaceable seats.

Non-slam check valves with dampening device shall be provided in severe service applications, such as compressor discharge piping.

Centrifugal pump discharge check valves shall be of either the lift disc, balanced tilting disc or spring actuated double flapper type.

Check valves shall be provided with drains on the downstream side of the check if required for safe operation and maintenance.

Check valves shall be provided with bolted bonnets that include a ½" NPT plug on the downstream side of the valve to facilitate testing if required.

Swing check valves, wherever specified, shall meet the requirements of BS 1868 / ASME B16.34. Valves shall be regular pattern unless specified otherwise. The area of the flow passage shall be at least equal to the seat port area. Valves shall also have a travel stop to limit disc swing in the open position.

Swing check valves designed for installation in the vertical position shall be provided with internal stops to prevent the flapper from sticking in the open position. Valves shall be furnished with the following features: bolted bonnets, replaceable seats and discs. Unless otherwise specified, the seat seal ring in all swing check valves shall be installed on the renewable seat facing (replaceable seats & disc) instead of on the clapper facing.

Wafer check valves shall be Wafer Lug and Double Flanges dual plate type valves and shall be designed per API 594 and shall be used where space is a critical issue. Dual plate check valves shall be furnished with the following features:

- Full tapped lug body design for NPS 2

Văn bản này được xác thực tại https://eoffice.vietsov.com.vn với số định danh: 627/25-CV-XDM/NIPI

- Both side tapped lug body design for NPS 3 to NPS 10
- Double flanged body design for NPS ≥12
- Spring loaded
- Metal to Metal Seating Surfaces
- Suitable for Vertical & Horizontal installation.
- Retainerless Design.

4.6 Monoflange Valves and Double Block & Bleed Valves

All valves shall be of "FIRE SAFE" design an shall be fire tested and certified in accordance with API 6FA, API 6FB, API 607, ISO 10497 and BS EN 12266, as specified in valves datasheets.

Valve construction shall be of one integral unit with one or two block valves and shall be designed as per VENDOR standard.

Double block and bleed valves shall have a body cavity port equipped with a cavity drain.

All valves shall be anti-static design.

Ball shall be of a one-piece solid construction with a continuous through bore, welded-in liners are not acceptable.

Stems shall be anti blow-out design. Stem retention shall not depend on the packing gland.

Non-metallic components for valves shall be suitable for use against design conditions specified on valve data sheets

All soft seated valves shall be suitable for pressure rating of ASME B16.34 for the specified body material. Vendor shall submit the details with the bid.

The valve body shall be of bolted construction and fully dis-mantable type.

Needle valve shall be of back seat, bolted bonnet design.

An integral ball / stem design for seat supported (floating) ball is not acceptable.

For full bore valves, minimum bore sizes shall be as per BS EN ISO 17292 specified for full bore valves.

4.7 Butterfly Valves

Butterfly Valves shall conform to API 609 Category A for sizes DN 50 through DN 600 and in general for larger sizes, except where modified by these specifications and/or valve data sheet.

Lugged valves shall be through drilled, with hole diameters to suit ASME B16.5 flanges.

Tapped lug or flanged type valves with appropriate bolting may be installed in applications in which equipment removal or blanking is required. The valves shall be capable of holding the full rated pressure with the downstream flange removed.

Butterfly valves shall be limited to utility water, firewater and air services unless approved otherwise by COMPANY.

Văn bản này được xác thực tại https://eoffice.vietsov.com.vn với số định danh: 627/25-CV-XDM/NIPI

Elastomer seats in butterfly valves shall be oil resistant and suitable for hydrocarbon service regardless of the intended service.
Multi-position "locking lever" of the notched plate design to allow positive positioning in a maximum number of intermediate positions are to be used where gear operators are not employed (soft seated valves only).

Valves are to be suitable for installation with the operating shaft in the horizontal plane.

Valve stem packing shall be adjustable by means of an external gland.

In case of gear operated valves, it should be possible to hold the valve disc in any intermediate position under all operating conditions. Gear operators shall be self locking.

All valves shall be equipped with adjustable mechanical stop limiting devices to prevent over travel of the valve disc in Open and Closed position.

All butterfly valves, both lever and gear operated, shall be supplied with a locking device suitable for a heavy duty padlock to prevent operation in the locked position.

Valves shall be bi-directional.

Inspection & testing shall be in accordance with ASME B16.34/ API 598 / API 6D.

4.8 Needle Valves

All valves shall be of "FIRE SAFE" design an shall be fire tested and certified in accordance with API 6FA, API 6FB, API 607, ISO 10497 and BS EN 12266, as specified in valves datasheets.

Valve construction shall be of one integral unit and shall be designed as per Manufacturer's standard.

Needle Valve body & internal parts are made from forging and high corrosion resistant materials. Suitable to withstand working pressure from 3000 psi to 6000 psi and temperature up to 250°C. Seal Material of nitrile, viton, PTFE, R-PTFE, etc.. suitable with fluid services. All of parts shall be detail specified in datasheet.

Valves construction are to be suitable for installation with the operating in the horizontal and vertical position.

Inspection & testing shall be in accordance with ASME B16.34/ API 598 / API 6D

4.9 Plug Valves

A plug valve is a quarter-turn manual valve that uses a cylindrical or tapered plug to permit or prevent straight through flow through the body. The plug has a straight through full port opening. Plug valve can be used in on-off, basic moderate throttling, and diverting services.

The face-to-face dimension for plug valves is normally associated with ANSI/ASME B16.10.

Valve dimensions and tolerances in accordance with ANSI/ASME B16.34

The most common plug valve design allows for straight through, two way service, with the closure element in the middle of the body. The closure element, which is a plug and a sleeve, is accessible through top entry access in the body and is sealed by a bonnet cap.

Văn bản này được xác thực tại https://eoffice.vietsov.com.vn với số định danh: 627/25-CV-XDM/NIPI

In the open position, the passage in the plug lines up with the inlet and outlet ports of the valve. When the closure element is rotated 90° from the open position, the solid part of the plug blocks the flow passage and stops the flow of fluid.

The body and tapered plug represent the essential features in plug valves. Careful design of the internal contours of the valve produces maximum flow efficiency. The port in the tapered plug is generally rectangular. However, valves are also available with round ports. Major valve patterns or types are identified as regular, venturi, short, round-port, and multi-port.

Plugs are usually tapered downward, while in some cases they are tapered upward. Most of the plug valves are top entry. In top-entry plug valves, the tapered plug is installed from the top of the valve. In some cases the plug is tapered upwards and is installed from the bottom opening in the valve body. Such a plug is called bottom entry or inverted plug valve.

The regular pattern employs the tapered form of port openings, the area of which is from 70 to 100 percent of the internal pipe area. In some cases, the face-to-face lengths are greater than those of standard gate valves. The venturi pattern provides streamlined flow and thus permits reduction in the port size. The port opening area is approximately 40 to 50 percent of the internal pipe area. In most of the plug valves, the port opening varies from 60 to 70 percent of the pipe area.

The round-port full-bore pattern has a circular port through the plug and body equal to or greater than the inside diameter of the pipe or fitting. Operating efficiency is equal to or greater than that of gate valves of the same size. Use of multi-port valves is advantageous in many installations because it provides simplification of piping and convenience in operation.

For some corrosive chemical services (such a hydrochloric acid, sulfuric acid etc), plug valve bodies are completely lined with PTFE, PVDF, PVDC, polyethylene, polypropylene or similar coatings.

Inspection & testing shall be in accordance with ASME B16.34/ API 598 / API 6D

4.10 Hand Angle Choke Valves

Hand Angle Choke Valves shall conform to API 6A latest edition, conjunction with project document for it.

All valves shall be of "FIRE SAFE" design an shall be fire tested and certified in accordance with API 6FA, API 6FB, API 607, ISO 10497 and BS EN 12266, as specified in valves datasheets.

Valve construction shall be of one integral unit. Welding, brazing any part of valve of valve is prohibited.

Each valve & integral union connection is clearly marked with a pressure rating (accordance to ASME rating). These connections must also match the service of the designated string they are installed in.

For choke having an upstream end connector of higher rated working pressure than the down stream end connector, the choke shall have a two-part rated working pressure

Văn bản này được xác thực tại https://eoffice.vietsov.com.vn với số định danh: 627/25-CV-XDM/NIPI

consisting of the rated working pressure of the upstream end connector and the rated working pressure of the down stream end connector.

The Choke is required a grease fitting for stem and the other components of choke.

Any disability of valve, leaking seal, broken bolts, leaking hoses or improperly tightened parts must be changed prior to acceptance.

Inspection & testing shall be in accordance with API 6A.

5.0 MATERIALS REQUIREMENTS

5.1 General

Materials used in valve manufacturing shall be in accordance with the relevant Valve Data Sheets issued by the purchaser. Any material substitution is subject to COMPANY approval.

All components not specified in the Valve Data Sheet shall have equivalent to or better corrosion resistance than the component they are coupled to. Galvanic corrosion shall also be considered. Asbestos material is strictly prohibited.

Bar stock material shall not be used for the fabrication of valves, including modular valves.

Unless otherwise specified, heat treatment shall be accordance with applicable material standard. Components of all product forms shall be hardness tested.

All carbon steel and alloy materials under insulation shall be painted in accordance with the manufacturer's specification combined with project painting specification and VENDOR shall be responsible for submit painting procedure to the COMPANY for approval.

Materials of construction of stainless steel valves and carbon steel valves and accessories shall be made from forged material. All forgings shall be in the normalized condition. Where pressure retaining parts have been specified as forged, substitution of casting is not permitted.

5.2 Bolting

All bolting and nut shall be Xylan Fluorocarbon coated or COMPANY approved equal.

Bolting material selection shall consider the compatibility of selected material in accordance with the service conditions.

Bolting material, mechanical and corrosion resistance properties, shall be equal or better than the ones listed in the following Table.

Valve bolting materials Valve body material	Bolting material
Carbon steels	ASTM A193/A193M Gr. B7M and ASTM A194/A194M Gr. 2HM or ASTM A320/A320M Gr. L7 or L7M and ASTM A194/A194M Gr. 4, Gr. 7 or Gr. 7M
Low temperature Carbon Steels	ASTM A193/A193M Gr. B7M and ASTM A194/A194M Gr. 2HM or ASTM A320/A320M Gr. L7 or L7M and ASTM A194/A194M Gr. 4, Gr. 7 or Gr. 7M
Austenitic Stainless Steels	ASTM A276 S32750/60 FLT and ASTM A276 S32750/60 SA, SF, HH or ASTM A193/A193M Gr. B8M and ASTM A194/A194M Gr. 8M
Duplex, Super Duplex	ASTM A276 S32750/60 FG and ASTM A276 S32750/60 SA, SF, HH

Văn bản này được xác thực tại https://eoffice.vietsov.com.vn với số định danh: 627/25-CV-XDM/NIPI

	ASTM A453 Gr.660 Class B (rating CL 2500 and below) ASTM A453 Gr.660 Class D (rating API 10000)
Other Non-ferrous	Per applicable valve standard

Grades B7M, L7M for studs and 2HM, 7M for nuts must be selected if valves are in H2S service and confined under heat insulation.

All bolts are subject to impact testing as per minimum design temperature indicated in relevant valve data sheet.

5.3 Bonnet to Body

The gaskets of bolted bonnet or cover flange joints shall be suitable for the valve pressure class and the maximum and/or minimum temperatures specified on the valve data sheets and requisitions, as well as for any additional requirement such as fire safe, etc.

Except as otherwise indicated in the requisitions, bonnet gaskets for gate and globe valves of 900 pressure class or higher shall be metallic solid ring joint. For valves pressure class 800 and below, metallic solid ring joint or spiral wound gaskets are acceptable. Valve design shall prevent any risk of gasket extrusion.

Metallic seals are either metallic ring joints or spiral wound gaskets exclusively. Spiral wound gaskets are only acceptable for pressure class 150, 300 and 600. Filler material used for spiral wound gaskets shall be made of high purity graphite (≥ 99.8%). In this case, it is emphasized that design calculation notes shall take into account the gasket reaction forces.

For API SPEC 6A valves, ring joint grooves minimum hardness and associated ring joints maximum hardness shall comply with the standard.

5.4 Casting Material

Cast material cannot be proposed as substitute to forged material unless specifically agreed by the COMPANY.

Cast material is not allowed for valve stem whatever the pressure class and valve size.

Seat and obturators may be allowed by casting. This allowance shall be subject to COMPANY approval.

Cast material may be used for obturators and seats except for:

- Obturators of valves in pressure class 1500 and above whatever the valve size.
- Seats in pressure class 600 and above whatever the valve size.

Weld repairs are not allowed on seats and obturators.

Impact testing requirements for pressure containing parts on casting material shall be as follows:

Material	Valve Minimum Design Temp.	Wall thickness. Valve component	Impact Test Temperature	Minimum Impact Test Value
Carbon Steel	T ≥ -29°C	< ½ inch	NA	Impact testing not required
		≥ 1/2 inch	-29°C	Required (Note 1)
Low Temperature Carbon Steel	T ≥ -46°C	All thickness	-46°C	Required (Note 2)

Văn bản này được xác thực tại https://eoffice.vietsov.com.vn với số định danh: 627/25-CV-XDM/NIPI

Duplex and Super Duplex Stainless Steel	T ≥ -46°C	All thickness	-46°C	Required (Note 3)

Notes:

1. The minimum absorbed energy for full size specimens shall be 18 joules (average) and 14 joules (single).
2. The minimum absorbed energy for full size specimens shall be 27 joules (average) and 20 joules (single).
3. The minimum absorbed energy for full size specimens shall be 54 joules (average) and 43 joules (single).

The impact test specimen shall be taken at one fourth of the thickness of the block or component or of the valve body. The corresponding wall thickness of the test block or valve component shall not be less than the thickness of the valve component in its critical area as defined by ASME B16.34.

Toughness test method shall comply with API SEC 6D.

5.5 Vent, Drain, Injection and Ancillary Connections

Threaded connections shall be compatible with the body material and made from corrosion resistant material.

Material selection for removable connections shall prevent galling and atmospheric corrosion.

Material requirements shall be as per following:

+ Plug and fitting material shall:

- Be the same chemical composition of the body or higher for welded connections.
- Be the same chemical composition of the trim or higher for non-welded connections.
- Be fully suitable for weldability where applicable.
- Have the toughness test requirements equivalent to the valve body as a minimum.

+ Sealant injection fittings shall:

- Be the same chemical composition of the trim or higher.
- Be fully suitable for weldability where applicable.
- Have the toughness test requirements equivalent to the valve body as a minimum

5.6 Carbon Steel Valves

The carbon steel used for the fabrication of the valves shall be produced in an electric furnace, or by the basic oxygen process.

Carbon steel components that will undergo a welding operation (fabrication; welds ends; overlay) shall comply with the following chemistry requirements, based on ladle analysis of the carbon steel materials used for the construction of the valves:

- Carbon Content: The carbon content shall be less than 0.23%.
- Carbon Equivalent: The Carbon Equivalent, calculated using the formula:

Văn bản này được xác thực tại https://eoffice.vietsov.com.vn với số định danh: 627/25-CV-XDM/NIPI

$$CE = C + \frac{Mn}{6} + \frac{Cr + Mo + V}{5} + \frac{Ni + Cu}{15}$$

Shall be less than 0.42%.

If the content of alloying elements other than C or Mn is unknown, and with the prior approval of the COMPANY, the formula to be used shall be:

$$CE = C + \frac{Mn}{6}$$

And, in this case, the carbon equivalent value shall be less than 0.40%.

5.7 Austenitic Stainless Steel Valves

321 type stainless steel shall have a carbon content not greater or equal to 0.02%. Valve bodies and bonnets shall undergo an annealing heat treatment in accordance with the corresponding ASTM standards.

When type 316 stainless flanged valves in material to ASTM A351/A351M Gr. CF8C are specified, forged materials to ASTM A182/A182M Gr. F316 or Gr. F321 can be acceptable substitutes ("L" grades are not acceptable in that case).

All stainless steel shall be cleaning, Descaling, Passivation of Stainless Steel Part, Equipment as per ASTM A380. All stainless steel forging shall be 100% liquid penetrant examined as per ASTM A182 & and accordance with Test Method E165, as applicable.

5.8 Duplex and Super Duplex Stainless Steel Valves

Unless otherwise specified by the valve data sheets, pressure containing parts and pressure controlling parts made of duplex or super duplex stainless steels shall comply with ASTM standards, the present standard and the following requirements:

- Chemical composition: N = min 0.14%

  PREN ≥ 34 for duplex material

  PREN ≥ 40 for super duplex material

- Toughness test: According to API SPEC 6D clause 6.6 requirements, whatever the material type (i.e. casting, forging, hot rolled bar, etc.) and clause 6.12 when applicable.
- Ferrite content: According to ASTM E562.

5.9 Copper Alloy Valves

Unless otherwise indicated in the valve data sheet, bodies and bonnets bronze alloy chemical composition shall be in accordance with UNS C83600 as per ASTM B62. The UNS reference for other copper alloys, in accordance with ASTM B584, shall be stipulated in the data sheets or in the requisition.

6.0 INSPECTION AND TESTING REQUIREMENTS

6.1 General

Every valve shall be subjected to all the mandatory tests and checks called in the respective codes / data sheet.

For valves to API Spec. 6D, manufacturer shall provide proof of valid API Spec 6D Monogram along with the quotation. The manufacturer's quality assurance shall be verified to comply with the requirements of API Spec Q1.

Văn bản này được xác thực tại https://eoffice.vietsov.com.vn với số định danh: 627/25-CV-XDM/NIPI

For valves to API Spec. 6A, manufacturer shall provide proof of valid API Spec 6A Monogram along with the quotation. The manufacturer's quality assurance shall be verified to comply with the requirements given in respective valve data sheet.

Inspection & Testing shall be performed in accordance with ASME B16.34 & API 598 / API 6D for each valve as listed in valve data sheet.

As minimum, the following production tests shall be performed:

- 100% visual inspection
- Random thickness tests on all components
- Hardness tests on all components
- Surface Examination (as per ASME B16.34)
- Tests for porosities, cracks & similar defects (outside & inside valve surfaces)
- Hydrotest or Pneumatic Testing. (there are hazards involved when gas is the fluid for testing. When gas is used, appropriate precautions are required)
- Fugitive emission test (optional)

The Manual Valves shall be assembled, dimensionally checked and functionally tested onshore to avoid installation work at offshore.

6.2 Quality Control

The inspection and tests necessary to confirm that the products meet the requirements of the standards, specifications and of the Purchase Order shall be carried out in the VENDORS plant by personnel of the plant. The specially-qualified personnel shall be independent of the production department of the plant.

Products that are to specifications shall be guaranteed by an adequate inspection certificate, conformity certificate, material certificate, test certificate, etc.

If the VENDOR does not have the necessary means of examination, these tests shall be carried out by an agency and at a place approved by COMPANY / CONTRACTOR.

The CONTRACTOR shall conduct inspections in the VENDOR's plant so as to ensure the proper execution of the order and of the quality examination.

All inspection activities shall be listed in a quality plan and detailed in an Inspection and Test Plan and shall be submitted to COMPANY for approval.

6.3 Visual Examination

All valves must be 100% visually inspected as per the API 598 and the MSS SP 55.

6.4 Pressure Tests

6.4.1 General

All valves (i.e., 100 % of the supply) shall undergo pressure tests in accordance with the requirements of the API 6A for API 10000 valves, API 6D Specification, complemented by the API standard 598. (Spot Testing" is not acceptable.) Valves not covered by these standards shall be tested in accordance with MSS Standard SP 61.

The VENDOR shall submit for COMPANY's approval its detailed testing procedure for each type of valves, including each pressure class and size. This procedure must be in full accordance with the present specification requirements and the applicable codes.

Văn bản này được xác thực tại https://eoffice.vietsov.com.vn với số định danh: 627/25-CV-XDM/NIPI

Test certificates must be supplied for each valve of the supply, which must accordingly be identified by an appropriate fabrication numbering system.

6.4.2 Test Medium

Water tests:

- Testing medium shall be clean, inhibited, fresh water. Stainless steel valves shall be tested using inhibited fresh water having a maximum chloride content of 30 ppm. This also applies to valves fabricated with some parts made of stainless steel. The temperature of the test must be a minimum of +10°C. In case of non-impact tested body materials, the minimum temperature of the test medium shall be +16°C.

- After testing with water, all valves shall be thoroughly dried to prevent possible corrosion from the water.

Gas tests:

- Gas tests shall be monitored using soap bubble method where zero leaks are either expected or requested. Where leak rates other than zero are specified, the leakage rate shall be measured using a flow meter calibrated with the gas used for testing.

6.4.3 Test Pressure

Hydrostatic test pressures for valves shall be as below table:

Valve Type	Shell test pressure (1.5 x Design Pressure)	High pressure closure test pressure (1.1 x Design Pressure)
Ball & Double Block Bleed Valve	100%	100%
Gate	100%	100%
Globe/ Needle	100%	100%
Check	100%	100%
Butterfly	100%	100%

The minimum shell/body, seat and closure test duration shall be as specified API 6D and API 598

Allowable leakage rates shall be as below table unless stated otherwise on the valve data sheets:

Valve Type	Valve Seal Type	Leakage Rate Reference
Ball and Double Block & Bleed	Soft Seal	API 598 (For Valves to BS EN ISO 17292) ISO 5208 (For Valves to BS EN ISO 14313)
	Metal Seal	API 598 (For Valves to BS EN ISO 17292) ISO 5208 (For Valves to BS EN ISO 14313) API Spec 6D
Check	Soft Seal	No visible leakage
	Metal Seal	API 598
Gate	Soft Seal	No visible leakage
	Metal Seal	API 598 / ISO 5208
Globe	Metal Seal	ASME B16.34

Văn bản này được xác thực tại https://eoffice.vietsov.com.vn với số định danh: 627/25-CV-XDM/NIPI

Valve Type	Valve Seal Type	Leakage Rate Reference
Butterfly	Soft Seal	No visible leakage

No leaks are acceptable for soft seals under hydrostatic closure tests.

No leaks are acceptable for low pressure tests with gas whether with soft seals or with metallic seals.

6.4.4 Acceptance Criteria

High pressure hydrostatic seat test leakage rates shall comply with API 6D and API 6A as applicable. The following criteria apply to gas tests only (including air, nitrogen, etc.):

- API 6A: For PSL-3G API 6A gas service valves API 10000.
- API 6D: For soft seated valve no visible leakage; For metal seated valve the allowable leakage rate is as per ISO 5208 - Rate "D".
- API 598: Table F leakage rates Acceptance Criteria.

6.4.5 Specific Requirement for Ball Valves

Valves in sizes 16" and above with pressure class 600 and above and all sizes for valve API 10000, shall be pressure tested with fill end thrust effect. For this purpose, flanged-end valves shall be tested using end flanges (i.e., with blind flanges), and welded-ends valves shall be tested using temporary caps.

All tests must comply with the procedure produced by VENDOR and submitted to COMPANY for approval. All ball valves shall pass an additional high pressure closure test according to the procedure described in the API 598. For valves of hydrocarbon fluids, this high pressure closure test must be done with nitrogen. For valves of utility service, it may be done with water.

6.5 Toughness Tests

Charpy impact tests to be carried-out on the valves (if required) are normally shown on the Purchase Order documents.

When these tests are required, they shall be carried out in accordance with the requirements of ASTM standard A 370 and at the temperature required for the grade of material.

In such case, the VENDOR must include extra lengths or detachable test plates from which the test pieces can be machined.

The CONTRACTOR or SUB CONTRACTOR is responsible for identifying and marking these test plates or extra lengths intended for the toughness tests before the VENDOR detaches them. Marking transfers must also be made in the same way. Witness of the above shall be verified by COMPANY.

6.6 Hardness Test

If specified in the Purchase Order documents, hardness tests shall be carried out on each valve body (e.g. for compliance with the NACE standards in case of H2S service).

Carbon steel valves with RTJ flanged end connections shall be provided with grooves with a minimum hardness (Brinell) of 120.

Stainless steel (316/316L) Valves with RTJ flanged end connections shall be provided with a minimum hardness (Brinell) of 160.

Văn bản này được xác thực tại https://eoffice.vietsov.com.vn với số định danh: 627/25-CV-XDM/NIPI

Duplex Stainless Steel flanges Valves with RTJ flanged end connections shall be provided with a minimum hardness (Brinell) of 190.

The groove surface roughness for contact faces including side walls shall be: 63 Microinchs Ra maximum (1.6 micrometer Ra).

6.7 Special Examinations

For all valves 6" and larger in pressure class 600 and higher, castings shall be examined in accordance with ASME B 16.34 (Requirements for special class valves, examination of steel castings) and MSS SP 55.

For ferrous materials, Magnetic Particle examination shall be used in preference to Dye Penetrant. full radiographic inspection shall be carried out on 100% of the beveled areas of all weld-end valves of sizes 2" and above, and on all butt-welded joints, to prove that these areas are free from any defects. Beveled area of valve ends made of forgings may be inspected by ultrasonic and magnetic particle inspection testing instead of radiography.

Additionally, any weld (including fillet welds) on valve bodies, regardless of size or pressure class, shall be 100 % examined by dye penetrant testing.

Radiographic defect acceptance levels on welds shall be in accordance with the following:

- Welds in forged or other wrought materials: ASME B31.3 Table 341 .3.2A, for normal fluid service (although the inspection level must be 100%, and not "spot or random"); however, acceptance criteria for inspection of welds in valves specified for "severe cyclic services" shall be those for "severe cyclic conditions" of the Table 34l.3.2A.
- Welds in castings - ASTM E446 up to 25 mm wall: level 1; above 25 mm wall: level 2.
- Butt-welds for pipeline valves must also comply with the applicable pipeline code. This refers in particular to transition and/or pup-piece welds in case of welded-ends valves. Cracks or crack-like defects are not acceptable.

6.8 Site Testing

Prior to installation each individual valve shall be hydrotested to design pressure.

Testing shall be conducted separately against each side of the closed valve. Any leaks shall be repaired, and testing shall be repeated after each repair. CONTRACTOR shall take necessary action and material to avoid contamination and leakage of the valve after the test.

6.9 Non-Destructive Testing and Inspection Requirements

6.9.1 General

NDE (Non-Destructive Examination) testing is required 100% for all pressure containing components of API 10000 valves.

PMI is required 100% for all stainless steel, duplex and super duplex valve pressure containing components.

Magnetic Particle Testing (MT) / Penetrant Testing (PT) is required 100% for all pressure containing components in accordance with ASME B16.34 Appendix II and III respectively.

Radiography Testing (RT) / Ultrasonic Testing (UT) is required for all pressure containing components of valves in accordance with ASME B16.34 Appendix I as per testing criteria (section 8.1)

Tensile test /Charpy V-notch test / Hardness test for High strength Carbon steel with SMYS > 60ksi (414 MPa) material.

Fischer Ferrite content check is required for duplex and super duplex material.

Văn bản này được xác thực tại https://eoffice.vietsov.com.vn với số định danh: 627/25-CV-XDM/NIPI

Charpy V-notch testing according to ASTM A370 at -46 deg C is required for duplex and super duplex stainless material.

The hardness testing is required for all pressure containing components as per section 9.6 and API 6A for API 10000.

6.9.2 NDE of Weld End and Assembly by Welding

Longitudinal weld of transition piece and pup piece and all the connecting butt welds to these components are subject to 100% radiographic examination and 100% ultrasonic examination.

Ultrasonic examination of the two butt welds shall be performed from each side of the welds whatever the line size. Full radiographic inspection shall be carried out on 100% of valves welding ends (casting or forged) of sizes 2" and above, and on all butt-welded joints.

Forged valves welding ends may be inspected by ultrasonic testing instead of radiography.

Any welds (including fillet welds) on valve bodies, regardless of size or pressure class, shall be 100% examined by dye penetrant testing (PT). Method shall be in accordance with ASME B16.34 Appendix III. Rounded or linear indications are not allowed.

Radiographic defect acceptance levels on welds shall be in accordance with the following:

- Welds on forged or other wrought materials: ASME B31.3 Table 341.3.2A, for normal fluid service (although the inspection level must be 100%, and not "spot or random"); however, acceptance criteria for inspection of welds in valves specified for "severe cyclic services" shall be those for "severe cyclic conditions" of the Table 341.3.2A
- Welds on castings - ASTM E446 up to 25mm wall: level 1; above 25 mm wall: level 2.
- Butt-welds for pipeline valves must also comply with the applicable pipeline code. This refers in particular to transition and/or pup-piece welds in case of welded-ends valves

7.0 ACCEPTANCE

All valves shall be 100% tested by the VENDOR in his shop and under his responsibility. The CONTRACTOR shall not release the valves unless all related certificates have been submitted and approved. In addition to checking the certificates, the CONTRACTOR shall check the quantities presented and shall have checked the manufacture assembly and associated inspection and testing activities in accordance with the following:

7.1 Testing Criteria

The following testing criteria shall be incorporated with Project Specific Inspection and Test Plan's:

Valve size	Valve type				
	All valve types and all valves service classes in pressure class	Gate, Globe and Check valves	Ball valve		
			Fluid: HC Liquid & Gas; Service: Note 1 Design Temperature Range: T ≤ 200^{0}C; T ≥ -46^{0}C	Other service class	
		Valve pressure class as per ASME B 16.34			
(port size for ball		All pressure	All pressure	Pressure class ≤	Pressure class >

Văn bản này được xác thực tại https://eoffice.vietsov.com.vn với số định danh: 627/25-CV-XDM/NIPI

valves)	≥ API 10000	class	class	600	600
≤ 1 1/2"	100%	10%	100%	10%	10%
2" to 10"	100%	25%	100%	25%	50%
≥ 12"	100%	100%	100%	100%	100%

Note 1:

ESDV valves on pipelines or on risers , as well as all inline valves adjacent to pig launchers or pig receivers and other valves on production and test manifolds.

7.2 Test Failure, Re-Work, Re-Test

In case a test fails, the VENDOR is permitted to re-submit the same valve only once, and only after it has been properly re-worked and the reasons for failure thoroughly examined and explained by the VENDOR to the CONTRACTOR who must report to them. Should a given valve fail to pass a test for the second time, it shall be rejected and replaced by a new one.

7.3 Test Failure On Spot Checks

For valve sizes for which spot checks from the CONTRACTOR are carried out, the extent of sampling shall be increased by steps of at least 5 % of the total valves number subject to spot checks, up to 100 %, for each test failure. This increased sampling area shall first be related to valves of the same type and size as those having failed, and then, to larger sizes of the same type from the same manufacture.

8.0 DOCUMENTATION

8.1 General

All quantities and dimensions shall be expressed in metric units. All information, manuals, certificates, data and inscriptions shall be in the English language.

The VENDOR shall supply to the COMPANY all documentation including statutory approvals and registrations necessary to verify that the valves supplied has been manufactured and fabricated in accordance with this specification and the codes and regulations incorporated herein by reference.

Review of this documentation by the COMPANY does not relieve the VENDOR of responsibility for ensuring compliance of the valves with the necessary codes and regulations.

The VENDOR shall provide all materials, test reports, utilities and consumables necessary to perform the testing and inspection of manual valves.

8.2 Certificates of Conformity

The VENDOR shall submit a certificate of conformity with the standards specified in the Purchase Order documents.

8.3 Material Certificates

The VENDOR shall submit material certificates giving the results of the chemical analysis and of the mechanical tests carried out in accordance with the requirements of the reference codes and standards, for all main metallic materials. The following types of certificates are required, with reference to DIN 50049 I EN 10204:

Valve part	Type of certificate	
	API 10000	Other service class

Văn bản này được xác thực tại https://eoffice.vietsov.com.vn với số định danh: 627/25-CV-XDM/NIPI

Body	3.2	3.1
Flange	3.2	3.1
Bonnet	3.2	3.1
Ball	3.2	3.1
Obturator	3.2	2.2
Stems	3.2	3.1
Bolting	3.2	3.1
Seats	3.2	3.1
Seals	3.2	3.1

In addition, the third party inspection certificate BS EN 10204:2004 Type 3.2 shall state:

- The identification of the material has been verified by the Certifying Authority.
- That all tests were witnessed by the independent third party inspection agency. Only 5 (five) independent third party inspection agencies, namely ABS, BV, DNV-GL, LRS and NKK, are acceptable to the COMPANY.
- Agency or inspector's identification symbol.

For valves to API Spec 6A/6D, manufacturer shall hold valid API 6A/6D license.

The VENDOR shall be responsible for acquiring the material certificates from the original valve or component manufacturer for the body, and elements and providing them to the COMPANY.

VENDOR shall furnish manufacturer's certificate / work's certificate which shall contain the following data as a minimum:

- Filled in data sheets
- Limitations with respect to operation, pressure/ temperature
- Statement from the manufacturer to confirm that the valve/ item has been constructed and manufactured according to recognized method, codes and standards

All certificates shall contain the following information:

- Name of manufacturer.
- Purchase order number and date.
- Manufacturer's order number.
- Identification number of certificate and its date of issue.
- Material specifications.
- Dimensions.
- Material charge number, batch number or heat-lot number
- Mechanical properties recorded from test results.
- Chemical composition recorded from chemical analysis.
- NDT methods and results, where applicable.
- Heat treatment procedures and records, where applicable.

8.4 Positive Material Identification

Positive material identification (PMI) is required. PMI which need only be applied once to a particular component or weld shall be carried out during the final stages of manufacture, in

Văn bản này được xác thực tại https://eoffice.vietsov.com.vn với số định danh: 627/25-CV-XDM/NIPI

order to confirm the materials of construction are as specified. It is not the intent of the PMI to provide a confirmation of traceability from source to final inspection.

The Vendor shall develop the PMI procedures to verify the chemical composition of all alloy materials, except carbon steel. A PMI test report shall be produced which shall include a PMI location plan to correlate the composition of the alloy with the location/ item from which the test was taken. Approval of the PMI procedures and programme shall be obtained from the VSP prior to commencing manufacture. Instruments or methods used shall of the type that will provide quantitative, recordable, elemental composition results for positive identification of the alloy elements presents. Most PMI instrument allows the operator to key in the test identification and provides a print out report.

The following items shall require PMI:

a) Pressure containing welds.
b) Valves bodies, gasket, bonnets and bolts.
c) Stud bolts and nuts.

In the event any one or more items are found to be other than the specification then all items will be subject to full PMI at the Vendor's cost.

8.5 Pressure Tests Certificates

The VENDOR shall submit a certificate of the pressure tests carried out on the valves in accordance with the codes and standards.

8.6 Other Tests Certificates

The VENDOR shall submit all other test certificates showing results of tests as required in the present specification and appendixes, for each valve.

8.7 Technical Manual

The VENDOR shall submit a detailed and dimensioned drawing of each valve, with a list specifying the technical characteristics, the references of the parts, and the materials used (including material grades for all parts). He shall also submit a detailed manual giving all information needed for:

- Understanding the functioning of the valve.
- Operating the valve.
- Maintenance and other work

9.0 PRESERVATION, PACKAGING AND SHIPPING

9.1 Marking

9.1.1 Valve Tagging

Marking of valves shall be as per MSS-SP-25.

All valves shall be tagged by the VENDOR with the Tag Number as stated on the requisition prefixed by the valve nominal size. All valves shall have a stainless steel nameplate, which shall be permanently attached to the body in a visible location. Tag shall be securely attached with multi-strand SS316 wire, such that the tag cannot be easily removed.

9.1.2 Identifications of Materials and Main Characteristics

In addition to the markings required by MSS standard SP 25, the following information shall be marked by cold stamping on each valve:

Văn bản này được xác thực tại https://eoffice.vietsov.com.vn với số định danh: 627/25-CV-XDM/NIPI

- The type of valve (gate, globe, check, etc.).
- The specification and grade of body and trim materials.
- The casting number.
- The batch number.
- The valve pressure class.
- The diameter.
- The ring joint number, in the case of flanges having this type of contact face.

Soft seal valves shall be clearly marked by the VENDOR with the soft seal material and maximum working temperature.

9.1.3 Color coding

If required, all valves shall be identified by an appropriate color coding system specified in the order.

9.2 Protection of Ends

All valve ends must be blanked off by wooden, metal or plastic plugs.

The threads of threaded valves shall be oiled or protected by a non-peel varnish.

The beveled ends of valves with butt-welding ends and the contact faces of end flanges shall be protected by a peel-off varnish.

9.3 Painting

After all required inspections and tests have been carried out valve external surfaces shall be thoroughly cleaned, freed from rust and grease, and provided with a coating system.

The valves shall be painted in accordance with the project specification:

VSP-NIPI-TYP-GEN-AC7-SP-01 Painting Specification for Platform
VSP-NIPI-TYP-GEN-AC7-SCH-01 Basic Painting Schedules for Platform

The interior surfaces, the threaded parts, the beveled or socket-welding ends, the flange contact faces and the various valve identifying markings shall not be painted.

9.3.1 Carbon Steel Valves

The coating applied shall be the VENDOR's standard system in compliance with Painting Specification and information of the protective system shall be advised, in his quotation, in sufficient detail to enable coating repair, touch-up and over-coating to be carried out without compatibility problems arising.

9.3.2 Austenitic Stainless Steel and Duplex Stainless Steel Valves

All stainless steel and Duplex Stainless Steel valves shall be protected against the risks of saline corrosion during cleaning, transport, fabrication, testing and/or storage. These valves are to be protected by paint as per Painting Specification, the paint must not contain chlorides or other substances that might damage the stainless steel.

9.3.3 Non-Ferrous Valves

Non-ferrous (i.e. bronze and gunmetal) valves shall not be painted.

9.4 Preparation

Each unit shall be completely drained of all liquid prior to shipment. Manufacturer shall be responsible for all valve damage which occurs as a result of improper drainage.

Văn bản này được xác thực tại https://eoffice.vietsov.com.vn với số định danh: 627/25-CV-XDM/NIPI

The valves shall be closed for shipment, except for ball valves which shall be shipped in the fully open position. Gate and globe valves with soft seals shall have the wedge/disc backed off to relieve the pressure on the seals

9.5 Packing

The valves must be packed in sea-packing, waterproof. Packing must be suitable for all stages of transport (rail, road, air, sea, etc.).

Ball valves shall be shipped in the fully open position.

Valve ends shall be sealed and protected. All apertures and vents shall be plugged. Tack welding of end protectors to valves is prohibited.

Valve stem extensions may be removed for shipping but shall be reassembled and air tested prior to delivery.

All bolts and gaskets required for re-assembly shall be attached to valve bodies.

Preparation for shipment shall be per API Spec 6D.

Each item shall be carefully packed in export quality packing and secured for transport in such a manner that it is protected from all dust, climatic conditions, vibration, movement and shock which may occur during loading, transport, unloading.

The VENDOR is only permitted to ship valves and materials to site upon successful completion and acceptance of the FAT. Shipping shall include, at least, the following:

- Packing and crating for international shipment.
- Insurance to site.
- Customs and excise formalities and duty charges at both source and destination ports.

Văn bản này được xác thực tại https://eoffice.vietsov.com.vn với số định danh: 627/25-CV-XDM/NIPI

RESEARCH AND ENGINEERING INSTITUTE FOR OFFSHORE OIL AND GAS

PROJECT NAME : **BK-10A WELLHEAD PLATFORM**

DOCUMENT TITLE : **DATASHEET FOR LV MOTORS**

DOCUMENT NO. : **BK1.BK10.BK10A-001-GE-ES2-DS-006**

PHASE : **DE**

Applied Document			VSP-NIPI-TYP-TS-ES2-DS-08		Rev.	0
			CONTROLLED Signed by: Lê Thị Hằng Date: 16/06/2025 14:56:44 Certified by: Vietsovpetro CA	Signed by: Гайнутдинов Евгений Нурлыгалиевич Date: 17.06.2025 07:11:52 Certified by: Vietsovpetro CA	Signed by: Авдеев Андрей Сергеевич Date: 17.06.2025 12:27:10 Certified by: Vietsovpetro CA	
			DC: L.T.HANG	**ENG. MGR:** GAYNUTDINOV	**PRO.MGR:** AVDEEV	
0	IFA		Signed by: Святохо Вячеслав Вениаминович Date: 16.06.2025 11:04:11 Certified by: Vietsovpetro CA		Signed by: Исатов Дмитрий Олегович Date: 16.06.2025 11:09:53 Certified by: Vietsovpetro CA	
REV.	**DES.**	**DATE**	**PREPARED: SVYATOKHO**	**CHECKED: SVYATOKHO**	**DEPT.MGR: ISATOV**	

Văn bản này được xác thực tại https://eoffice.vietsov.com.vn với số định danh: 327/25-CV-TDH/NIPI

TRACK CHANGES

No	Rev.	Content of Change	Note
1	0	Issued for approve	

Văn bản này được xác thực tại https://eoffice.vietsov.com.vn với số định danh: 327/25-CV-TDH/NIPI

TABLE OF CONTENTS

1. INTRODUCTION 4

2. ADDENDUM 5

Văn bản này được xác thực tại https://eoffice.vietsov.com.vn với số định danh: 327/25-CV-TDH/NIPI

1. INTRODUCTION

BK-10A Wellhead Platform belongs to Vietsovpetro JV. It will be located in Block 09-1, White Tiger oil field, offshore the Socialist Republic of Vietnam.

BK-10A is connected with BK-10 by a linking bridge. BK-10A is an unmanned platform with 12 slots (03 spare slots) and will be remotely controlled from the host platform BK-10 via fiber optic cable.

There will be 09 production wells on BK-10A (02 wells will be converted into water injection wells in future as planned) and 03 wells can be added in the future.

Based on the criterion of the need for production and maximizing the return on investment, BK-10A will be considered to have the minimum facilities. The full well stream of BK-10A will be gathered together with the produced fluid of BK-10 and BK-1, preliminarily separated on BK-10 and then transferred to CPP-2.
The scope of this project is detailed engineering design for the BK-10A Wellhead Platform, Linking Bridge and modification of BK-10.

Location of BK-10A and related platforms as below.

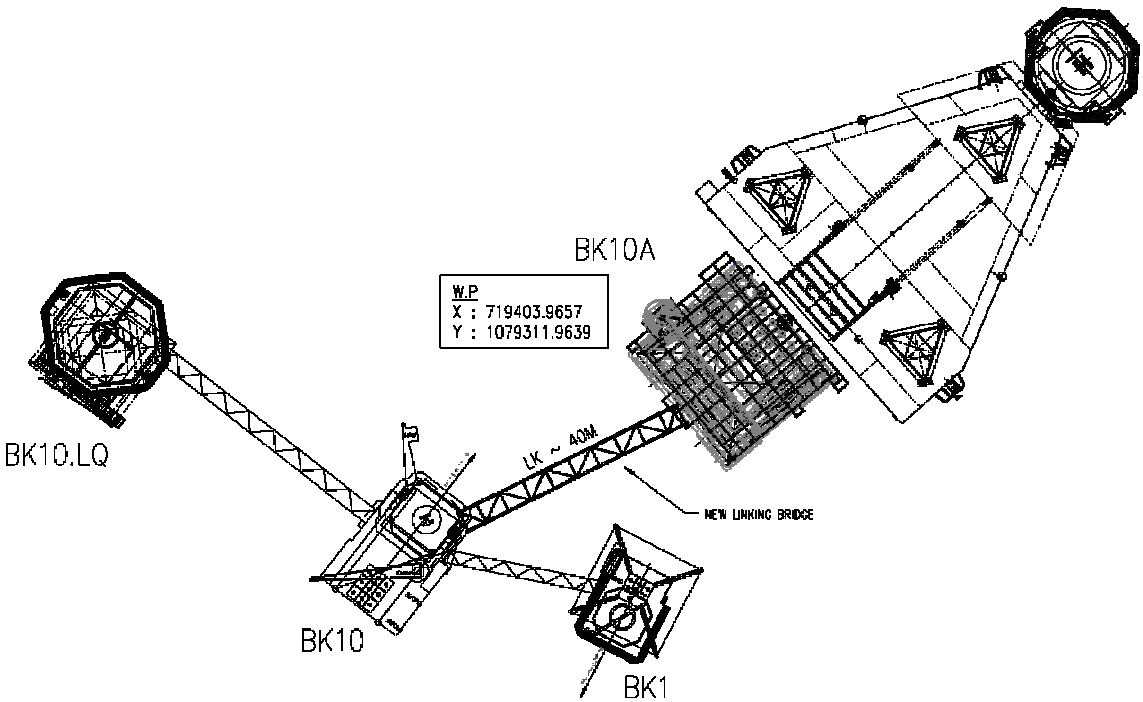

Figure 1: Location of the BK-10A Wellhead Platform and related platforms

Văn bản này được xác thực tại https://eoffice.vietsov.com.vn với số định danh: 327/25-CV-TDH/NIPI

2. ADDENDUM

This document uses the Typical Engineering Documentation for this Project. However, some design intends or requirements may require to be revised to fit with Project's purpose. This section lists changes in the applied typical documents, originating in Typical Engineering Documentation for any reason including those indicated in Table 1. These changes are identified in this Addendum to the applied typical document, identifying the document and section affected and the required change.

VENDOR shall review the required changes in conjunction with the referenced document and project's engineering documents.

The type of modification shall be defined and indicated in subsequent text as follows:

- ✓ "ADD" - Indicates the following statement(s) is/are added to the Company referenced text.
- ✓ "DELETE" - Indicates the following statement(s) is/are deleted from the Company referenced text.
- ✓ "REPLACE WITH" - Indicates the following statement(s) is/are revision(s) to the Company referenced text.

Table – 1: List of changes

Section	Current Statement or Requirement	Revised to
Page 3/4, row 32	Over current, Earth fault	REPLACE WITH: Over current, Overload, Earth fault
Page 3/4, row 42	Full Voltage, Direct-On-Line or Softstarter,	REPLACE WITH: Full Voltage Direct-On-Line or Soft-starter, Star-delta,

Văn bản này được xác thực tại https://eoffice.vietsov.com.vn với số định danh: 327/25-CV-TDH/NIPI

VIETSOVPETRO

RESEARCH AND ENGINEERING INSTITUTE FOR OFFSHORE OIL AND GAS

VIETSOVPETRO
RESEARCH & ENGINEERING INSTITUTE

AGREED BY
Deputy General Director of Vietsovpetro

Tran Xuan Hoang

30/03/2020

APPROVED BY
Chief Engineer of Vietsovpetro

Tran Van Vinh

/ /2020

TYPICAL ENGINEERING DOCUMENTATION

DOCUMENT TITLE : DATASHEET FOR LV MOTORS (TYPICAL)

DOCUMENT No. : VSP-NIPI-TYP-TS-ES2-DS-08

AGREED:	Name	Date
Capital Construction Department		26/3/20
Material and Equipment Department		25/3/20
Mechanical and Energy Division		25/03/2020

CONTROLLED

REV.	DESCRIPTION	DATE	PREPARED	CHECKED	CHIEF DEPART.	ENG. MANAGER	PRO. MANAGER
0	IFA	02/03/2020	P.X.VUONG	T.N.BINH	T.H.TOAI	T.D.HAI	B.T.HAN

Văn bản này được xác thực tại https://eoffice.vietsov.com.vn với số định danh: 327/25-CV-TDH/NIPI

Change Log

REV	SECTION	PAGE	CHANGE DESCRIPTION

Reference Documents

VSP-NIPI-TYP-TS-ES2-SP-08	SPECIFICATION FOR LV MOTORS

Văn bản này được xác thực tại https://eoffice.vietsov.com.vn với số định danh: 327/25-CV-TDH/NIPI

1	**Tag No. :**	Specified in Technical Requirement (TR)		**Client:**	VietsovPetro Joint Venture	
2	**Service:**	Specified in Technical Requirement (TR)		**Plant Location:**	Specified in Technical Requirement (TR)	
3	**P & ID No. :**	Specified in Technical Requirement (TR)		**Manufacturer:**	NOTE 4	
4	**Calculation Ref. :**			**Purchase Order No. :**	NOTE 4	
5	**No. of Units:**					
6	**Service Description:**					
7	ENVIRONMENTAL CONDITIONS			POWER SYSTEM		
8	Location: Tropcial offshore, high corrosive, humid, salt laden			Rated Utilization Voltage:	380 V ± 5%	
9	Ambient air temp: Min: 20.5 Max: 39 °C			Rated Frequency:	50 Hz ± 2%	
10	Humidity: 100% Altitude: <1000 m			Neutral Earthing:	TN-S or otherwise specified	
11	Hazardous area classification: Refer to mechanical equipment DS					
12	PARTICULARS OF EQUIPMENT	UNITS				
13	**BASIC DATA**					
14	Applicable Standard		IEC 60034			
15	Manufacturer		NOTE 4			
16	Model Number		NOTE 4			
17	Frame Size		NOTE 4			
18	Rated Voltage	V	380			
19	Rated Frequency	Hz	50			
20	Voltage / Frequency Tolerance		± 5% Voltage / ± 2% Frequency			
21	Rated Power	kW	NOTE 4			
22	Motor Type		Squirrel			
23	Duty (IEC 60034-1)		S1			
24	No of poles / Synchronous Speed	pole/rpm	NOTE 4 / NOTE 4			
25	No of Phases		3			
26	Stator Connection		NOTE 4			
27	Winding material		Copper			
28	Insulation Class		Class F			
29	Temperature Rise		Class B / 90°C			
30	Ingress Protection Classification (IEC 60034-5)		IP68(Immersible)/IP56(outdoor)/ IP44(indoor)			
31	Cooling Type (IEC 60034-6)		IC4A1A1			
32	Upstream Fault Protection		Over current, Earth fault			
33	**PERFORMANCE CHARACTERISTICS**					
34	Full Load Current	A	NOTE 4			
35	Efficiency FL / ¾ FL / ½ FL	pu	NOTE 4		/ /	
36	Power Factor FL / ¾ FL / ½ FL	pu	NOTE 4		/ /	
37	Full Load Torque	Nm	NOTE 4			
38	Breakdown Torque	pu	NOTE 4			
39	Pull-up Torque	pu	NOTE 4			
40	Torque-Speed Curve Attached?	Yes/No	Yes			
41	**STARTING CHARACTERISTICS**					
42	Starting Method		Full Voltage, Direct-On-Line or Soft-starter, VFD as specified in Technical Requirements			
43	Starting Performance (IEC60034-12)		Design N, and DOL LRC<= 7.0 Rated Current			
44	Maximum Allowable Stall Time Hot / Cold	s	NOTE 4		/	
45	Thermal time constants Heating / Cooling	s	NOTE 4		/	
46	Max. no. of Starts Per Hour		NOTE 4			
47	Max. no. of Starts Per Year		Normal			
48	Starting Current Un / 0.8 x Un	pu	NOTE 4		/	
49	Starting Power Factor Un / 0.8 x Un	pu	NOTE 4		/	
50	Locked Rotor Torque Un / 0.8 x Un	pu	NOTE 4		/	
51	Max Run-up Time Un / 0.8 x Un	s	NOTE 4		/	
52	**HAZARDOUS AREA CERTIFICATION**					
53	Protection Type and Classification		NOTE 4			
54	Ex e Motor t_e Time	s	NOTE 4			
55	Certifying Authority		NOTE 4			
56	Certification Standard		NOTE 4			
57	Certificate Number		NOTE 4			
58	Certificate Date	dd/mm/yyyy	NOTE 4			
59	Certificate includes VFD service?	Yes / No	Yes (If driven by VFD)			
60	**CABLE CONNECTIONS**					
61	Ingress Protection of Terminal Boxes (IEC 60529)		IP68(Immersible)/IP56(outdoor)/ IP44(indoor)			
62	Power Terminal Box Classification (Ex 'd' / 'e' / 'n')		NOTE 4			
63	Power Cable Type		0.6/1kV Cu/EPR/SHF2/TCWB/SHF2			
64	Power Cable No. and Size		Specified in Technical Requirement (TR)			
65	Power Cable Gland & Entries		NOTE 4 (Metric thread)			
66	Power Terminal Box Location (IEC 60034-7)		Horiz. Machines - LHS from NDE			
67	Power Cable Enty Direction		From below			
68	Heater Terminal Box Classification (Ex 'd' / 'e' / 'n' / 'i')		NOTE 4			
69	Heater Cable Type		0.6/1kV Cu/EPR/SHF2/TCWB/SHF2			
70	Heater Cable No. and Size		NOTE 4			
71	Heater Cable Gland & Entries		NOTE 4 (Metric thread)			
72	Aux. Terminal Box Classification (Ex 'd' / 'e' / 'n' / 'i')		NOTE 4			
73	Instrument Cable Type		NOTE 4			
74	Instrument Cable No. and Size		NOTE 4			
75	Instrument Cable Gland & Entries		NOTE 4 (Metric thread)			

Văn bản này được xác thực tại https://eoffice.vietsov.com.vn với số định danh: 327/25-CV-TDH/NIPI

1	**Tag No. :**		**Client:**	VietsovPetro Joint Venture			
2	**Service:**		**Plant Location:**				
3	**P & ID No. :**		**Manufacturer:**	NOTE 4			
4	**Calculation Ref. :**		**Purchase Order No. :**	NOTE 4			
5	**No. of Units:**						
6	**Service Description:**						
7	ENVIRONMENTAL CONDITIONS		POWER SYSTEM				
8	Location: Tropcial offshore, high corrosive, humid, salt laden		Rated Utilization Voltage:	380	V	±	5%
9	Ambient air temp: Min: 20.5°C Max: 39 °C		Rated Frequency:	50	Hz	±	2%
10	Humidity: 100% Altitude: <1000 m		Neutral Earthing:	TN-S or otherwise specified			
11	Hazardous area classification: Refer to mechanical equipment DS						
12	PARTICULARS OF EQUIPMENT	UNITS					
13	**MECHANICAL DETAILS**						
14	Mounting (IEC 60034-7)		NOTE 2, NOTE 4				
15	Stator Frame Material		Cast Iron				
16	Rotation Facing Drive End	CW/CCW	NOTE 4				
17	Fan Bi-Directional	yes/no	Yes				
18	Color		Vendor Standard				
19	Paint Specification		Vendor Standard				
20	Motor Weight	kg	NOTE 4				
21	Motor Inertia	kg m^2	NOTE 4				
22	Driven Load Inertia	kg m^2	NOTE 4				
23	Coupling Type		NOTE 4				
24	Maximum Sound Pressure Level at Full Load	dBA	IEC 60034-9 (Note 1)				
25	Integral Breather / Drain (IEC60034-5)	yes/no	Yes, IP56				
26	DE Bearing Type		Roller				
27	DE Bearing Make		NOTE 4				
28	No. of DE Bearings		NOTE 4				
29	NDE Bearing Type		NOTE 4				
30	NDE Bearing Make		NOTE 4				
31	No. of NDE Bearings		NOTE 4				
32	Bearing Lubrication		Grease				
33	Bearing Ingress Protection (IEC 60529)		IP44 for Indoor, IP56 for Outdoor				
34	Minimum bearing lifetime, motor only	hr	≥40000				
35	Maximum relubrication interval	hr	NOTE 4				
36	Max Shaft Voltage	mV rms	150mV if uninsulated				
37	Insulated Bearings	yes/no	NOTE 4				
38	Bearing Insulation Rating	kV	NOTE 4				
39	Rotor Axial Float pos / neg	mm	NOTE 4				
40	Vibration at No-load, soft mounted, peak-to-peak	mm/s	<50				
41	Critical speed(s)	rpm	NOTE 4				
42	Maximum Transient Airgap Torque for:						
43	Two-phase short circuit at motor terminal	kNm	NOTE 4				
44	Three-phase short circuit at motor terminal	kNm	NOTE 4				
45	Asynchronous Start	kNm	NOTE 4				
46	Re-start with Full Opposite Residual Voltage	kNm	NOTE 4				
47	**ACCESSORIES**						
48	Anti-condensation heater	Yes/No	Yes (for motor with power rating >=25kW)				
49	Anti-condensation Heater Power	W	NOTE 4				
50	Anti-condensation Heater Voltage	V	220VAC, 1 Phase				
51	Winding Temperature Detectors		NOTE 3, 4				
52	Bearing Temperature Detectors		NOTE 3, 4				
53	Frame Earth		External stud				
54	Accelerometer Shock-Pulse Measurement Devices	Yes/No	NOTE 4				
55	Anti-rotational Device	Yes/No	NOTE 4				
56	**TEST REQUIREMENTS**						
57	Type Test	Yes/No	Yes (certificate only required)				
58	Performance Test	Yes/No	Yes (certificate only required)				
59	Routine Test	Yes/No	Yes				
60							
61							
62	*NOTES:*						
63	*1. All motors to be low-noise design. Motor and driven equipment to meet the noise criteria of the Mechanical equipment specification.*						
64	*2. Standard mounting arrangements are IM1001 for horizontal and IM3011 for vertical.*						
65	*3. RTDs PT100 required for motors >150kW and for all Ex e or VFD motors (if specified). Vertical motors >150kW require thrust bearing RTDs.*						
66	*4. To be completed by driven machine supplier*						
67							
68							
69							
70							
71							
72							
73							

Văn bản này được xác thực tại https://eoffice.vietsov.com.vn với số định danh: 327/25-CV-TDH/NIPI

RESEARCH AND ENGINEERING INSTITUTE FOR OFFSHORE OIL AND GAS

PROJECT NAME : BK-10A WELLHEAD PLATFORM

DOCUMENT TITLE : SPECIFICATION FOR LV MOTOR

DOCUMENT NO. : BK1.BK10.BK10A-001-GE-ES2-SP-006

PHASE : DE

Applied Document	VSP-NIPI-TYP-TS-ES2-SP-08	Rev.	0

			CONTROLLED Signed by: Lê Thị Hằng Date: 16/06/2025 14:56:43 Certified by: Vietsovpetro CA	Signed by: Гайнутдинов Евгений Нурлыгалиевич Date: 17.06.2025 07:11:50 Certified by: Vietsovpetro CA	Signed by: Авдеев Андрей Сергеевич Date: 17.06.2025 12:27:09 Certified by: Vietsovpetro CA
			DC: L.T.HANG	**ENG.MGR: GAYNUTDINOV**	**PRO.MGR: AVDEEV**
0	IFA		Signed by: Святохо Вячеслав Вениаминович Date: 16.06.2025 11:04:11 Certified by: Vietsovpetro CA		Signed by: Исатов Дмитрий Олегович Date: 16.06.2025 11:09:53 Certified by: Vietsovpetro CA
REV.	**DES.**	**DATE**	**PREPARED: SVYATOKHO**	**CHECKED: SVYATOKHO**	**DEPT.MGR: ISATOV**

Văn bản này được xác thực tại https://eoffice.vietsov.com.vn với số định danh: 327/25-CV-TDH/NIPI

TRACK CHANGES

No	Rev.	Content of Change	Note
1	0	Issued for approve	

Văn bản này được xác thực tại https://eoffice.vietsov.com.vn với số định danh: 327/25-CV-TDH/NIPI

TABLE OF CONTENTS

1. INTRODUCTION 4

2. ADDENDUM 5

Văn bản này được xác thực tại https://eoffice.vietsov.com.vn với số định danh: 327/25-CV-TDH/NIPI

1. INTRODUCTION

BK-10A Wellhead Platform belongs to Vietsovpetro JV. It will be located in Block 09-1, White Tiger oil field, offshore the Socialist Republic of Vietnam.

BK-10A is connected with BK-10 by a linking bridge. BK-10A is an unmanned platform with 12 slots (03 spare slots) and will be remotely controlled from the host platform BK-10 via fiber optic cable.

There will be 09 production wells on BK-10A (02 wells will be converted into water injection wells in future as planned) and 03 wells can be added in the future.

Based on the criterion of the need for production and maximizing the return on investment, BK-10A will be considered to have the minimum facilities. The full well stream of BK-10A will be gathered together with the produced fluid of BK-10 and BK-1, preliminarily separated on BK-10 and then transferred to CPP-2.
The scope of this project is detailed engineering design for the BK-10A Wellhead Platform, Linking Bridge and modification of BK-10.

Location of BK-10A and related platforms as below.

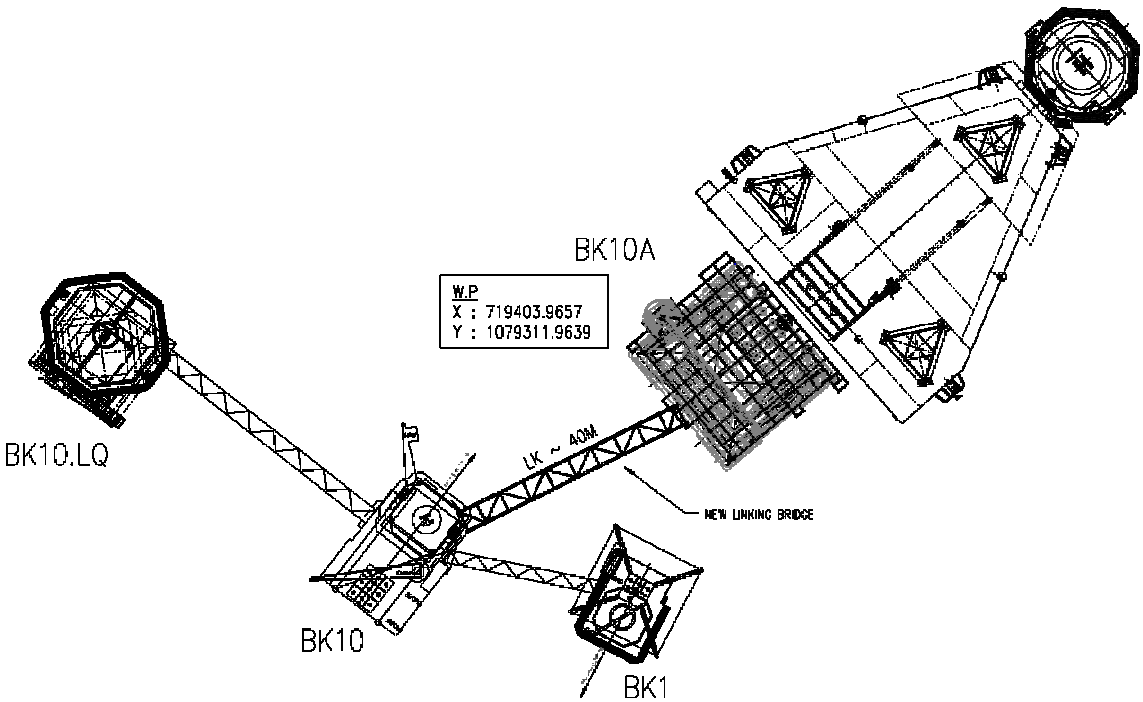

Figure 1: Location of the BK-10A Wellhead Platform and related platforms

Văn bản này được xác thực tại https://eoffice.vietsov.com.vn với số định danh: 327/25-CV-TDH/NIPI

2. ADDENDUM

This document uses the Typical Engineering Documentation for this Project. However, some design intends or requirements may require to be revised to fit with Project's purpose. This section lists changes in the applied typical documents, originating in Typical Engineering Documentation for any reason including those indicated in Table 1. These changes are identified in this Addendum to the applied typical document, identifying the document and section affected and the required change.

VENDOR shall review the required changes in conjunction with the referenced document and project's engineering documents.

The type of modification shall be defined and indicated in subsequent text as follows:

- ✓ "ADD" - Indicates the following statement(s) is/are added to the Company referenced text.
- ✓ "DELETE" - Indicates the following statement(s) is/are deleted from the Company referenced text.
- ✓ "REPLACE WITH" - Indicates the following statement(s) is/are revision(s) to the Company referenced text.

Table – 1: List of changes

Section	Current Statement or Requirement	Revised to

Note:

No changes need to be made.

Văn bản này được xác thực tại https://eoffice.vietsov.com.vn với số định danh: 327/25-CV-TDH/NIPI

VIETSOVPETRO

RESEARCH AND ENGINEERING INSTITUTE FOR OFFSHORE OIL AND GAS

VIETSOVPETRO
RESEARCH & ENGINEERING INSTITUTE

AGREED BY
Deputy General Director of Vietsovpetro

Tran Xuan Hoang

03/04/2020

APPROVED BY
Chief Engineer of Vietsovpetro

LIÊN DOANH VIỆT - NGA VIETSOVPETRO

Tran Van Vinh

06/04/2020

TYPICAL ENGINEERING DOCUMENTATION

DOCUMENT TITLE : SPECIFICATION FOR LV MOTORS

DOCUMENT No. : VSP-NIPI-TYP-TS-ES2-SP-08

AGREED:	Name	Date
Capital Construction Department		11/9/20
Material and Equipment Department		24/3/20
Mechanical and Energy Division		12/03/20

CONTROLLED

REV.	DESCRIPTION	DATE	PREPARED	CHECKED	CHIEF DEPART.	ENG. MANAGER	PRO. MANAGER
0	IFA	28/02/2020	P.X.VUONG	T.N.BINH	T.H.TOAI	T.D.HAI	B.T.HAN

Văn bản này được xác thực tại https://ifdocs.vietsov.com.vn với số định danh 4328655-BPVTLXL

Change Log

REV	SECTION	PAGE	CHANGE DESCRIPTION

Reference Documents

VSP-NIPI-TYP-TS-ES2-DS-08	DATASHEET FOR LV MOTORS (TYPICAL)

Văn bản này được cấp bởi Vietsovpetro. Mọi thông tin vui lòng truy cập https://office.vietsov.com.vn hoặc gọi số 3838525 để biết thêm chi tiết.
This document is provided by Vietsovpetro. For more information please visit https://office.vietsov.com.vn or call 3838525.

TABLE OF CONTENTS

1.0	**PURPOSE**	**5**
1.1	**Definitions and Abbreviations**	5
1.1.1	Definitions	5
1.1.2	Abbreviations	5
1.2	**Statement of Compliance**	5
2.0	**CODES, STANDARDS AND APPLICABLE DOCUMENTS**	**6**
2.1	**IEC Standards**	6
2.2	**Other Standards**	7
2.3	**Order of Precedence**	8
3.0	**SCOPE OF WORK AND SUPPLY**	**8**
4.0	**TECHNICAL REQUIREMENTS**	**9**
4.1	**Operating Conditions**	9
4.2	**Electrical Characteristic**	9
5.0	**DESIGN AND CONSTRUCTION**	**9**
5.1	**General**	9
5.2	**Insulation Class**	10
5.3	**Degree of Protection**	10
5.4	**Method of Cooling**	10
5.5	**Motors for Hazardous Area and Unclassified Area**	10
5.6	**Performance Requirements**	11
5.6.1	Starting	11
5.6.2	Starting Characteristics	11
5.6.3	Critical Speed	12
5.6.4	Vibration	12
5.6.5	Noise	12
5.6.6	Pulsating Stator current	12
5.7	**Construction Requirements**	12
5.7.1	Motor Housing	12
5.7.2	Winding	13
5.7.3	Rotors, Fans and Coupling	13
5.7.4	Bearings	13
5.7.5	Submerged Motors and Electrically Driven Seal-less Pump	14
5.7.6	Anti-Condensation Heaters	14
5.7.7	Bushings and Terminals	14
5.7.8	Terminal Boxes and Power Junction Boxes	15
5.7.9	Earthing	16
5.7.10	Rating Plates and Labels	16
5.8	**Painting and Protective Coating**	17
6.0	**INSPECTION, TESTING AND CERTIFICATION REQUIREMENTS**	**17**

Văn bản này được tạo bởi tài khoản [illegible] - Số tin nhắn: 43286525

6.1	**General**	17
6.2	**Inspection and Testing**	18
7.0	**SPARE PARTS**	**20**
8.0	**PREPARATION FOR SHIPMENT**	**20**
9.0	**GUARANTEE**	**21**
10.0	**QUALITY ASSURANCE**	**21**

Văn bản này được cấp cho [illegible] theo yêu cầu tại https://edoffice.vietsov.com.vn với số định danh 4328655-BPVXL

1.0 PURPOSE

This specification defines the functional requirements for the supply, design, materials, fabrication, inspection, testing, painting, preparation for shipment and documentation of the LV Motors delivered as part of mechanical equipment packages for VSP's Project. VENDOR shall be responsible for all calculations and design to guarantee component construction and system performance in accordance with this specification, codes, standards and data sheets.

1.1 Definitions and Abbreviations

1.1.1 Definitions

PROJECT	VSP's Project
COMPANY	The party which initiates the project and ultimately pays for its design and construction and owns the facilities. Here the COMPANY is Vietsovpetro (Referred to as VSP)
CONTRACTOR	The party which carries out all or part of the design, engineering, procurement, construction and commissioning of the project
VENDOR	The party on which the order or contract for supply of the equipment / package or services is placed

1.1.2 Abbreviations

VSP	Vietsovpetro
DE	Detailed Engineering
AC	Alternating Current
DCS	Distributed Control System
FAT	Factory Acceptance Test
IEC	International Electro-technical Commission
IP	Ingress Protection
LV	Low Voltage
RTD	Resistance Temperature Detector
VDRL	Vendor Document Requirement List
VMDR	Vendor Master Document Requirement

1.2 Statement of Compliance

VENDOR shall guarantee the equipment complies with this specification and is properly designed, constructed and suitable for the specified requirements.

The equipment shall be tested in the VENDOR's works to prove capability and compliance with this specification. All tolerances shall be in accordance with this specification, and relevant IEC standards.

Vui lòng quét mã QR để truy cập tài liệu trên https://office.vietsov.com.vn với số định danh 4328655215-BPVXL

If the equipment fails to comply with the specification, COMPANY/CONTRACTOR reserves the rights to reject the equipment, or allow VENDOR to rectify the problem and retest, free of charge to the COMPANY/CONTRACTOR.

VENDOR shall notify the CONTRACTOR of any apparent conflict between this Specification, Drawings, Datasheets, Codes and Standard, and any other relevant documents. Resolution and/or interpretation precedence shall be obtained from CONTRACTOR in writing before proceeding with design/ manufacture.

All deviations from the requirements of the specification shall be clearly stated in the Bid Documentation using the "VENDOR Deviation Form'. In the absence of such a statement, it shall be deemed that all requirements of this specification are fulfilled without exception.

All deviations from the requirements of the specifications shall be obtained approval from COMPANY/CONTRACTOR in writing before proceeding with design/ manufacture.

2.0 CODES, STANDARDS AND APPLICABLE DOCUMENTS

VENDOR shall generally comply with the latest revision and relevant sections of the following regulations, standards and codes of practices.

The applicable international codes and standards are as follows:

IEC International Electro-technical Commission

ISO International Organization for Standardization

IP 15 Institute of Petroleum Model Code of Safe Practice

Part 15: Area Classification Code for Petroleum Installations

NEMA National Electrical Manufacturers Association

Note: Unless specifically designated by date, the latest edition of each publication shall be used, together with amendments, supplements or revision thereto.

2.1 IEC Standards

IEC 60034-1	Rotating Electrical Machines - Part 1: Rating and performance
IEC 60034-2	Rotating Electrical Machines - Part 2: Methods for determining losses and efficiency of rotating electrical machinery from tests
IEC 60034-5	Rotating electrical machines - Part 5: Degrees of protection provided by the integral design of rotating electrical machines (IP code) - Classification
IEC 60034-6	Rotating Electrical Machines - Part 6: Methods of cooling (IC code)

Văn bản này được tải từ https://fileserver.vsp.com.vn với số định danh 4328655-BPVXL

IEC 60034-7	Rotating Electrical Machines - Part 7: Classification of types of construction, mounting arrangements and terminal box position (IM Code)
IEC 60034-8	Rotating Electrical Machines - Part 8: Terminal markings and direction of rotation
IEC 60034-9	Rotating Electrical Machines - Part 9: Noise limits
IEC 60034-12	Rotating Electrical Machines - Part 12: Starting performance of single-speed three-phase cage induction motors
IEC 60034-14	Rotating Electrical Machines - Part 14: Mechanical vibration of certain machines with shaft heights 56 mm and higher – Measurement, evaluation and limits of vibration severity
IEC 60034-18	Rotating Electrical Machines - Part 18: Functional evaluation of insulation systems
IEC 60072	Dimensions and output series for rotating electrical machines
IEC 60079-0	Explosive atmospheres – Part 0: Equipment – General requirements
IEC 60079-1	Explosive atmospheres – Part 1: Equipment protection by flame proof enclosure 'd'
IEC 60079-7	Explosive atmospheres – Part 7: Equipment protection by increased safety 'e'
IEC 60079-14	Explosive atmospheres – Part 14: electrical installation design, selection and erection
IEC 60079-15	Explosive atmospheres - Part 15: Equipment protection by type of protection "n"
IEC 60085	Electrical insulation - Thermal evaluation and designation
IEC 60529	Degrees of protection provided by enclosures (IP Code)
IEC 61892	Mobile and Fixed Offshore Units - Electrical Installations (all parts relevant to Project application)

2.2 Other Standards

NEMA MG 1	Motors and Generators

Văn bản này được cấp cho [illegible] theo [illegible] 4328655-BPVXL

DNVGL-OS-D201	Electrical Installations

2.3 Order of Precedence

Order of precedence in case of conflict between documents shall generally be:

- Data Sheets
- This Specification
- Reference Drawings
- Reference Project Standards and Specifications
- International Codes and Standards

The above order of precedence is only a general guide, where a conflict and/or discrepancy exist between this specification and the above documents, drawings, codes, and/or standards, it is the responsibility of VENDOR to bring it to the attention of the COMPANY/CONTRACTOR immediately for decision and disposition of the discrepancy or conflict.

In the event that VENDOR fails to highlight any discrepancies and/or conflicts, the most stringent requirements shall apply. COMPANY/CONTRACTOR's decision shall be binding on VENDOR without any additional cost and schedule impact.

3.0 SCOPE OF WORK AND SUPPLY

VENDOR shall be responsible for all calculations and design to guarantee LV motor construction and performance in accordance with this specification, codes, standards and requisitions data sheets.

VENDOR shall furnish complete details of the motor as per the data sheet and covering at least details related to construction, hazardous area application, kW, kV, frequency, rated current, speed, % running slip, frame size, mounting details, details of power factor, efficiency, current, and torque at both full load and starting conditions, peak torque and % slip at peak torque, hot & cold thermal I-t withstand curve at full voltage and 80 % voltage, inertia values, motor starting time at both 80 % & 100 % motor terminal voltages, winding to earth and the inter turn insulation peak impulse withstand values, motor type test certificates, and hazardous area application test certificates.

VENDOR shall refer to the LV motor datasheets for quantity, type of service and detailed technical requirements.

VENDOR shall supply the LV motor(s), including all drawings and hook-up materials, in accordance with this specification, datasheets and drawings.

The LV motor shall be designed, manufactured, tested, and supplied in accordance with the requirements in this specification.

VENDOR shall, wherever possible, draw upon his existing, pre-engineered or standard designs to satisfy the requirements of the specifications.

Văn bản này được cấp cho [illegible] theo [illegible]

VENDOR shall submit full technical details of the LV motor(s), which meet the requirements, detailed herein. Aspects of the requirements, which cannot be met, shall be identified and the variances explained using the 'VENDOR Deviation Form'.

4.0 TECHNICAL REQUIREMENTS

4.1 Operating Conditions

The motors shall function without any effect on its reliability under ambient conditions. The motors shall be tropicalised.

The motors shall be suitable for operating satisfactorily on the site ambient conditions specified in the data sheets or specification documents of the driven equipment or main package of which the motor shall form a part.

The outdoor ambient shall be assumed to be salt-laden, corrosive and humid as commonly encountered in offshore installations.

Where VENDOR's standard design does not meet the operating conditions, VENDOR shall give details of the technical changes and commercial impact of complying with stated conditions.

4.2 Electrical Characteristic

Unless otherwise specified in the datasheets, LV motors shall operate with rated output power at 380V AC, 3-phase, 50Hz. The input supply variations shall be limited under steady state conditions to:

- Nominal system voltage: ± 5%
- Nominal system frequency: ± 2%

5.0 DESIGN AND CONSTRUCTION

5.1 General

All LV motors shall be of squirrel cage induction type. Motors of the same rating, speed, shaft mounting arrangements and hazardous area classifications shall be completely interchangeable. Equipment/materials must have at least 2 years of proven offshore field experience with good client reference.

Generally, horizontal mounted machine shall be IM1001, and vertical flange mounted machine shall be IM3011 unless otherwise specified on the data sheets. It shall be suitable for either direction of rotation, unless specific application requires only unidirectional motor. Direction of rotation, total mass shall be indicated on nameplate of motors.

Single phase motors and special motors are not covered in this specification.

Văn bản này được cấp cho [illegible] theo số tài khoản 4328655 - BPVXL

Motors shall be suitable for immediate restart without requirement for additional inspection or maintenance after an idle period of 6 months.

Motors and their protective systems shall be designed to be safe for the equipment and personnel under all conditions including all fault scenarios.

VENDOR shall provide all tools, shaft extensions etc, for rotor withdrawal and shall submit full rotor withdrawal procedures to the COMPANY/CONTRACTOR for review.

5.2 Insulation Class

All insulation materials shall be minimum Class F, as defined in IEC 60034-18. The rating of the motor shall be based on a Class B temperature rise for all parts of the motor windings (reference ambient temperature at 39 °C).

5.3 Degree of Protection

The degree of protection shall be at least IP44 for the indoors and IP56 for outdoors motor, auxiliaries, terminal boxes and bearing housings in accordance to IEC 60034-5. For submerged electrical motors, IP68 for the applicable parts shall apply.

Vertical motors with downward drive-end shaft shall be provided with a rain canopy covering the air inlet of the fan cowl.

5.4 Method of Cooling

Unless otherwise specified, motors shall be air-to-air fan cooled IC4A1A1, totally enclosed - fan cooled (TEFC) in accordance with IEC 60034-6.

5.5 Motors for Hazardous Area and Unclassified Area

LV motors for use in hazardous areas shall comply with the standards listed in Section 2.0 and shall be certified to those standards by a recognized International Certifying Authority.

In general, motor classification shall be as follows unless otherwise specified in the datasheets:

- LV motors for use in Zone 1 classified area shall be of the flameproof Ex 'd' or Ex 'de'.
- LV motors for use in Zone 2 classified area shall be of the non-sparking Ex 'nA' type or that suitable for use in Zone 1 areas (as described above).

All explosion protection rated LV motors shall be suitable for use in Gas Group IIA, Temperature Class T3 hazardous area.

LV motors installed outdoors in non-hazardous (unclassified) areas, IP56 as minimum shall be required.

Precautions shall be taken to prevent the possibility of spark discharge due to static or stray induced current in the rotor shaft, bearings, ends-shields, base-plates, pedestals and external cladding.

Văn bản này được cấp cho [illegible] theo [illegible] 4328655-BPVTLXL

5.6 Performance Requirements

LV motors and all individual items forming part of it shall comply with this document and shall have an expected lifetime of at least 15 years under the specified service and operating conditions. They shall be suitable for at least 4 years of uninterrupted operation under the conditions specified. Rolling element bearings are exempted from the expected lifetime requirement.

5.6.1 Starting

Motors shall be suitable for direct on line starting.

Cage-induction motors shall be suitable for restart under full load conditions, and at any voltage between 80% and 100% of the rated voltage applied at the motor terminals (See Note below).

At any voltage between 80% and 100% rated voltage, motors shall be capable of:

- Three successive starts with the motor initially at maximum ambient temperature
- Two successive starts with the motor initially at full load operating temperature

Between successive starts the motor will decelerate under operating conditions.

After a cooling period of 30 minutes at standstill another starting sequence of at least two successive starts shall be possible.

Motors shall be designed and tested in accordance to IEC standards and shall be rated for continuous duty type S1 suitable for the load characteristics and operational duty of the driven equipment.

Note: If reduced voltage motor starting (e.g., soft-starter, etc) is specified, motor manufacture shall liaise with COMPANY/ CONTRACTOR to discuss and agreed on the reduced voltage available during starting, the starting torque available and the current available for the motor. Motor manufacturer shall verify that the motor will successfully run-up to full-speed under the required starting conditions of the driven machine and power supply (for both 100% of the rated voltage and at reduced voltage lower than 80%) and COMPANY approval shall be obtained.

5.6.2 Starting Characteristics

The locked rotor apparent power shall comply with IEC 60034-12. Unless specified otherwise in requisition data sheet, for LV motors with a rated output in excess of 55kW the starting current shall not exceed 7.0 times the rated current of the motor.

The starting performance of motors shall comply with IEC 60034-12.

The torque-speed characteristic of the motor with rated frequency and 80% rated voltage applied at the motor terminals shall be adequate for starting the driven load under the most severe conditions, e.g. pump with open discharge. Under these conditions the accelerating torque shall not be less than 10% of the load full torque.

The breakdown torque shall not exceed 300% of the rated torque and shall be higher than 180% of the rated torque.

Vật phẩm này được cấp cho [illegible] theo số đơn hàng 4328655-HPCVXL

5.6.3 Critical Speed

LV Motors shall have a rigid, under critical rotor-bearing system with the first rotor bending critical speed not lower than 125% of the synchronous motor speed.

At the first critical speed, the bearing vibration of the motor shall not exceed twice the values specified in 5.6.4.

5.6.4 Vibration

Vibration test shall be conducted according to the two conditions below:

- Free suspension: the vibration shall not exceed 1.8mm/s in bearing housing.
- Rigid mounting: the vibration shall not exceed 2.8mm/s in bearing housing.

The vibration severity/ velocity of the motor frame, including main terminal boxes, should not exceed 4.5mm/s root-mean-square (rms).

The motor vibration levels shall also be limited to acceptable values as laid down in the IEC standards and the limits stated on the data sheets of the driven equipment package.

5.6.5 Noise

Noise level limits shall be as stated on the motor datasheets. Generally, the noise level shall not exceed 85 dB(A) at 1 meter from the motor. Motors shall meet the maximum allowable noise limits by design and not by corrective measures. Where this level cannot be met without the provision of special noise reducing features, the levels with and without these features shall be stated in the proposal.

VENDOR shall co-ordinate with the driven equipment to ensure that the total noise level of the package does not exceed the limits stated on the noise datasheets for the package. Generally, the mean sound pressure level at 1 meter, shall not normally exceed 85dB (A) in the manned areas (may include sales gas compressor and turbine generators).

Motors shall meet the maximum allowable noise limits by design and not by corrective measures.

5.6.6 Pulsating Stator current

Motors driving equipment which requires a variable torque during each revolution, e.g. reciprocating compressors or pumps, shall have sufficient inertia to limit the variations in the motor stator current to a value not exceeding 40% of the full-load current.

The additional inertia necessary to comply with the current variation and speed irregularity requirements should be added to the rotating mass of the motor.

5.7 Construction Requirements

5.7.1 Motor Housing

Motor housings shall be made from either fabricated cast iron or steel material; light-metal materials (e.g. aluminum alloy) are not acceptable. Submerged motor housing material shall be VENDOR standard similar to driven pump housing material, and suitable for the installation environment.

Văn bản này được cấp cho [illegible] theo số tài khoản 4328655 [illegible]

Hygroscopic materials shall not be used. The materials used shall be selected to prevent contact corrosion. All frames and bearing end-shields shall be made of ferrous materials.

Construction shall be anti-static and non-sparking even when faulty.

Motors heavier than 20kg shall have lifting rings, eye bolts, lugs or extension pieces clearly identifiable to be used for hoisting.

5.7.2 Winding

All winding insulation shall be minimum Class F to IEC 60085 with the maximum design temperature rise limited to Class B (reference ambient temperature at 40°C). The winding conductors shall be made of copper. All winding shall be treated to resist moisture, sea air and oil vapour.

However, winding insulation class for submersible motors shall be as per VENDOR's standard.

All windings shall be adequately supported, braced and blocked to provide sufficient rigidity and to limit end winding vibration and subsequent cracking of the winding insulation.

Windings shall be able to withstand the dynamic forces, which result from frequent starting, and starting against full opposite residual voltage.

5.7.3 Rotors, Fans and Coupling

The rotor shaft shall be made of one-piece, heat-treated steel. Welding on finished shafts is not allowed. The rotors shall be dynamically balanced at nominal / operating speeds.

Air-cooled machines shall not draw their air from the drive end of the machine. Fans shall be inherently balanced, shaft-mounted, and located by means of driving keys or by studs which are off-pitched such that it is difficult to assemble them incorrectly. Fan materials shall be anti-static and corrosion resistant type.

The external fans and, if applicable, the separately mounted internal fan(s) shall be individually balanced and keyed to the shaft. The external cooling fans shall be of non-corroding material. The flow of cooling air shall be in the direction of the driven equipment.

The coupling design shall be based on the maximum transient torques which can be expected at the coupling in case of a two phases short-circuit at the motor terminals. The coupling shall also cater for reconnection torque.

5.7.4 Bearings

The minimum re-lubrication interval shall be 4000 hours by rolling element bearing. Application/addition of lubricants shall be safely and easily possible with the motor in operation.

The maximum permissible shaft-voltage measured across the ends of the shaft shall not exceed 250mV (rms) for rolling element bearings or 400mV (rms) for sleeve bearings. If this condition cannot be met inherently, bearing insulation shall be provided. VSDS

Văn bản này được cấp cho [illegible] theo [illegible]

driven motors shall be provided with insulated bearing with the measured shaft voltage not exceeding 250mV.

For single-bearing pedestal motors, the insulation system shall be of sandwich construction with two separate insulating layers. A removable earthing connection shall bridge one layer to ensure equipotential bonding of the middle conducting block.

Vertical motors driving direct coupled pumps shall have the thrust bearing at the non-drive end (NDE).

The use of angular contact bearings shall be restricted to vertical motors where the bearings have to accept high axial forces.

All rolling element bearings shall have a metallic cage.

Bearings shall have a rated L10 lifetime in excess of 40,000 hours under the worst case operating conditions.

5.7.5 Submerged Motors and Electrically Driven Seal-less Pump

Parts, including cables, which are in contact with the product pumped, shall be chemically and thermally resistant to this product over the lifetime of the motor.

The windings, and connections to them, shall be designed to minimize the number of joints submerged in the process or filling fluids. Coils shall be secured so as to prevent winding movement and chafing on other parts inside the motor.

The windings shall be tested to NEMA submerged stator test MG 1-20.49.

5.7.6 Anti-Condensation Heaters

Space heater with rated voltage 220-230V, 50Hz, 1-Phase shall be provided for motors rated equal and greater than 25kW. The surface temperature of the heater element or the motor enclosure shall never exceed the hazardous area limiting temperature. The heater shall be of a fully insulated design and suitable for the hazardous area classification specified.

The connecting leads of the heater elements shall be brought out to terminals in a dedicated and separate heater terminal box mounted on the motor frame. A prominent warning label shall be provided – **"Warning-circuit may be alive"**

5.7.7 Bushings and Terminals

Terminal marking of the main cable connections and the direction of rotation shall be in accordance with IEC 60034-8.

Terminal marking of auxiliary cable connections shall be in accordance with the relevant motor wiring diagrams.

Terminal blocks should be made of synthetic resin, unless the motor certification specified otherwise.

Terminal connections shall be constructed in such a way that direct contact between screws, bolts or nuts and the conductor is avoided. Connections shall be secured against loosening and in case cable lug connections are used the arrangement shall be such that the contact pressure is maintained.

Văn bản này được cấp cho [illegible] theo số tài khoản 4328625 - BPVXL

5.7.8 Terminal Boxes and Power Junction Boxes

Terminal boxes including removable gland plates shall be made of cast iron or steel and shall be of a non-compound filled design. The terminal boxes and gland entries shall be effectively sealed by plugs against the entry of water and dirt before shipment. Terminal boxes shall have ingress protection of at least IP44 (for indoor)/IP56 (for outdoor) and suitable to mounted place. All cover joints shall be fitted with gaskets of polychloroprene.

Terminal boxes shall be located on the left hand side of the motor when viewed from the non-drive end and shall allow for cable entry preferably from bottom (or sides if bottom entry is not possible) and protected from weather.

The VENDOR shall ensure that ample space is provided for CONTRACTOR's cable(s) connection. VENDOR shall confirm with CONTRACTOR the incoming cable size, type and no. of runs during bidding stage.

Cable shall be terminated by means of brass double compression type cable glands, certified for hazardous area classification. Cable entry to the terminal boxes shall be ISO metric entries.

Site drilling for cable entry of certified Ex'd' terminal boxes are not allowed. All cable entries for Ex'd' enclosure shall be pre-drilled (according to CONTRACTOR's cable entry size) and certified at the VENDOR's Works.

Certified plugs shall be used to blank off all unused entries in certified Ex 'e' and Ex 'd' equipment and similar certified adaptor shall be used to match metric glands to non-metric entries.

All pre-drilled cable entries shall line up with terminal posts / studs, so as to avoid mechanical stress on the terminals. Gland plates for single core power cables shall be non-magnetic. Terminals shall be bolted lug or pressure clamp type. Pinch screw terminals are not acceptable.

Auxiliary equipment fitted to the motor shall be wired to dedicated auxiliary terminal boxes fitted to the side of the motor and complying with the above requirements.

Inside the terminal box an earthing clamp or bolt of adequate dimensions shall be provided for connection of the cable armoured. The earthing facility shall be clearly marked with the appropriate symbol.

For submersible pump LV motors, VENDOR shall supply the interconnection power cable, intermediate junction box (if any) for connection submersible motor to Power Junction Box located on topside. Cable shall be pre-terminated (and sealed) in the motor. Length of the pre-terminated cable suitable for the pumped liquid environment shall be as specified in requisition data sheet. Cables for RTD and other accessories run from submersible motor to topside shall be in a similar manner as described for power cable, but in separate junction boxes. Junction boxes shall have ingress protection of at least IP 66, certified Ex 'e' type and complete with all necessary terminals and accessories.

The Power Junction Box (and RTD junction box, if applicable) shall be made of electro-polished 316L stainless steel.

Văn bản này được tạo bởi Office Viet Sov - Liên doanh Việt Sô

VENDOR shall provide cables, intermediated junction boxes (if any), complete with glands, from submersible motor to topside Power Junction Box (and RTD junction box, if applicable).

5.7.9 Earthing

Motors shall be provided with external earthing lugs located at diagonally opposite ends of the motor frame. Mounting bolts shall not be used as a means of earthing.

Necessary earth studs, nuts and spring washers shall be provided. Adequately sized earth terminals shall be provided for earthing of the cable armoured.

The earthing lugs shall be clearly marked with the appropriate symbol.

5.7.10 Rating Plates and Labels

Rating plates shall be made of 316L stainless steel or approved non-corrosive material and be fixed to a non-removable part of the frame.

All internal components and terminals shall be identified in accordance with VENDOR's reference drawings and documents.

Inscriptions shall be in English language and warning labels and all electrical safety related signage's shall be in English. Warning notice plates shall be red on white background

Terminals of input and output supply cables shall be clearly and uniquely marked to show nominal system voltage and phase/ polarity of the supply. Terminals identification shall conform to IEC 60445.

Information provided on the rating plates shall be in accordance with IEC 60034-1. The values provided shall, as far as possible, be actually measured and shall be based on the specified operating conditions.

a) VENDOR's name
b) VENDOR's serial number & year of manufacturing
c) Purchase order number
d) Degree of ingress protection of motor, terminal boxes and auxiliary devices
e) Rated output
f) Rated Voltage & winding connection
g) Rated current
h) Rated frequency and number of phases
i) Rated speed
j) Class of insulation & temperature rise
k) Power factor at full load and starting power factor
l) Efficiency at full load
m) Locked rotor current at rated voltage & frequency
n) Locked rotor torque at rated voltage & frequency
o) Allowable running-up time (ART's) at rated voltage and 80% rated voltage

Văn bản này được xác thực tại https://office.vietsov.com.vn với số định danh [illegible]

p) Explosion protection category including temperature and gas group in accordance with IEC 60079 (if applicable)

q) Certification body and certificate reference number (if applicable)

r) PTC trip and alarm setting (if applicable)

s) Anti-condensation heater voltage and rating (if applicable)

t) Inverter duty ((if applicable)

5.8 Painting and Protective Coating

Motors shall have an internal and external surface finish which provides adequate protection against the adverse effects of the humid, tropical, salt-laden and corrosive environment, normally encountered in offshore installations.

Where tropical treatment is specified, the finish that is type tested for the likely daily fluctuation in temperature and humidity shall be provided. Where special treatment is needed because of extreme environmental conditions, additional information shall be provided.

Painting and coating shall generally be the manufacturer's standard suitable for the site conditions. Exterior surface shall be thoroughly prepared and degreased prior to paint treatment. Primer and paint applied shall give a first class durable finish, able to withstand exposure in severe service conditions in an unsheltered location.

The finished colour shall match that of the driven equipment.

For submersible motors, painting and coating if required shall be based on VENDOR standard.

A careful inspection shall be made to ensure all operating instructions and label plates are in place, legible and have not been obscured during the painting process.

Painting damaged during transit shall be repaired by VENDOR. VENDOR shall supply paint, matching the colour used, for field touch-up purpose.

6.0 INSPECTION, TESTING AND CERTIFICATION REQUIREMENTS

6.1 General

COMPANY/CONTRACTOR or its representative shall have free access to the plants of VENDOR and his Sub-Supplier's during fabrication, assembly, and testing of the equipment. Inspection visit shall be coordinated thru VENDOR's Project Manager.

Prior to shipment, VENDOR shall carry out the required Factory Acceptance Tests (FAT) in the presence of COMPANY/CONTRACTOR engineers or their appointed representatives. The COMPANY/CONTRACTOR will specify to VENDOR the extent of his participation in the inspection and testing.

COMPANY/CONTRACTOR may require additional testing if test results are unsatisfactory or marginal at no additional cost to the COMPANY/CONTRACTOR. Any equipment rejected shall be repaired or replaced to COMPANY/CONTRACTOR's satisfaction and test shall be repeated at VENDOR's cost.

Văn bản này được cấp cho [illegible] theo [illegible] 4328655-HBPVTLXL

COMPANY/CONTRACTOR shall be given the opportunity to inspect VENDOR's manufacturing facilities including Sub-Supplier's facilities to confirm that satisfactory quality assurance (Q.A) and production procedures are being implemented. VENDOR shall make available all relevant Q.A. procedures for review.

All rights of COMPANY/CONTRACTOR in respect of Inspection and Testing shall also, upon COMPANY/CONTRACTOR's request, be extended to any and all third parties authorized by COMPANY.

VENDOR shall furnish, immediately on award of order, the names of:

The Works Manager and his assistants to whom contact should be made for inspection of the equipment.

The Office Engineer and his assistants to whom contact should be made for technical queries, and manufacturing and expediting progress.

During construction of the Equipment, VENDOR shall establish and maintain an inspection and quality control program to ensure adherence to the applicable codes and this specification.

Any unsatisfactory material, equipment, installation, or workmanship shall be replaced or repaired to COMPANY/CONTRACTOR's satisfaction at VENDOR's cost.

All pre-requisites for test such as temporary interconnections, test instruments, etc. as well as the actual conduct and documentation of tests shall be the responsibility of VENDOR.

VENDOR shall inform COMPANY/CONTRACTOR as part of the bid, if any of the specified tests cannot be performed. In the absence of such a statement, it shall be understood that all requirements of this specification are fulfilled without exception.

6.2 Inspection and Testing

The LV motors shall be tested in accordance to codes & standards listed in Section 2.0. The tests shall include but not limited to the following:

Performance Tests

a) Winding resistance (cold and hot)
b) Full load heat run
c) Slip at full and ¾ load
d) Efficiency at full and ¾ load
e) Power factor at full and ¾ load
f) Current unbalanced at full load
g) No-load current and losses
h) Locked rotor current and torque
i) Winding temperature rise
j) Dielectric test on motor windings, heaters and built-in temperature detector

Vật phẩm này được cấp bởi https://officevietsov.com với số tài khoản 4328655-HBPVTLXL

k) Insulation resistance (for motor winding measurements - to be taken before and after heat run)

l) Vibration severity and noise test

m) Shaft voltage at no load

n) Run-up (speed-time) curve

o) Inspection (at full load) of bearings and mechanical operation of the motor

p) Physical inspection

The above tests shall be carried out on one motor of each identical group of motors. Type Test certificates on an identical motor shall be provided. The VENDOR shall certify that each motor is identical with the one which was subjected to the performance or type test.

Routine Tests

q) Winding resistance (cold)

r) No load current and losses

s) Dielectric test

t) Insulation resistance

u) Vibration

v) Physical inspection

w) Inspection (at full load) of bearings and mechanical operation of the motor for minimum of 4 hours.

All motors shall be subjected to the routine test.

Motor with VSDs shall be tested as single unit with its matching VSD unit.

Motors for special duties or equipped with special protection equipment may require additional tests. These tests shall be agreed between the COMPANY/CONTRACTOR and VENDOR.

VENDOR shall be responsible to carry out all inspection and tests as required at the VENDOR's Works.

The overall responsibility for entire system inspection rests with VENDOR. However, COMPANY/CONTRACTOR and COMPANY/CONTRACTOR's inspection representative, reserve the right to inspect the packages at any time during manufacture to ensure that materials and workmanship are in accordance with the requirements of the packages datasheets, drawings, the applicable codes and other associated standards. Inspection by COMPANY/CONTRACTOR or its representatives will in no way relieve VENDOR of any of his responsibilities for ensuring that the equipment meets all the requirements of this specification.

Văn bản này được cấp cho [illegible] theo [illegible] 4328655215-BPVTLXL

7.0 SPARE PARTS

VENDOR shall include in their scope of supply the spares required for pre-commissioning, commissioning and start-up as required. A list of pre-commissioning, commissioning and start-up spares considered for each package shall be submitted to COMPANY/ CONTRACTOR for review.

A recommended spare parts list for two (2) years of operation shall also be submitted for CONTRACTOR's review and purchase separately.

Recommended spares shall take into account related factors of equipment reliability, costs of parts and availability of equipment service facilities.

All spare parts furnished by VENDOR shall be wrapped and packed to preserve items as new condition under normal storage anticipated in Vietnam. The same parts shall be properly tagged by stainless steel tags and coded so that later identification as to their intended usage will be facilitated.

All items supplied shall be packaged separately and clearly marked as 'Spare Parts' and shipped with the equipment. Packing lists shall be furnished complete and in detail so that parts can be handled without un-crating, if desired.

VENDOR shall provide adequate and all commissioning and start-up spares including all VENDOR's recommended spares.

8.0 PREPARATION FOR SHIPMENT

VENDOR shall be responsible for preparation of the equipment for export shipment and completion of all required preservation for storage in tropical climates for a maximum period of 12 months.

A careful inspection shall be made to ensure that all operating instructions and label plates are in place, legible and have not been obscured during painting operations. Each item shall be clearly identified with the VENDOR's name, address, Purchase Order and tag number.

The shipping crates shall be constructed of wood and suitably packed to protect all items against damage during the shipment and storage. Miscellaneous shall be tagged or marked with the tag item number for which they are intended. All such parts shall be suitably boxed, firmly attached to the main item and shipped with the unit.

Protection shall be provided against atmospheric corrosion while in transit and while in outdoor storage. All exposed machined surfaces shall be protected with an easily removable rust preventative compound.

The contents of all boxes or packages shall be recorded in detail on the packing list. The transported package shall have the necessary fastenings, protections and lifting facilities to satisfy lifting and sea fastening loads and restraints. Two complete set of the installation, operating and maintenance instructions shall be packed and shipped with the unit.

Văn bản này được cấp cho [illegible] theo [illegible] số [illegible]

9.0 GUARANTEE

VENDOR shall guarantee all equipment furnished to be in compliance with this specification and drawings.

VENDOR shall guarantee all the equipment against defective material, design, damage or non-conformity and/ or workmanship.

10.0 QUALITY ASSURANCE

VENDOR and his Sub-VENDOR shall operate a quality system satisfying the latest ISO 9001 Quality Management Systems - Requirement, or agreed equivalent standard, commensurate with the goods and services provided.

VENDOR shall demonstrate evidence of Quality Assurance in all aspects of VENDOR's current design and manufacturing practices. Quality Control procedures covering all aspects of design, manufacturing, inspection and test relevant to the equipment shall be included.

Văn bản này được cấp cho [illegible] theo [illegible] số [illegible] ngày [illegible]

RESEARCH AND ENGINEERING INSTITUTE FOR OFFSHORE OIL AND GAS

PROJECT NAME : **BK-10A WELLHEAD PLATFORM**

DOCUMENT TITLE : **SPECIFICATION FOR ELECTRICAL REQUIREMENT FOR PACKAGE EQUIPMENT**

DOCUMENT NO. : **BK1.BK10.BK10A-001-GE-ES2-SP-008**

PHASE : **DE**

Applied Document	VSP-NIPI-TYP-TS-ES2-SP-10	Rev.	0

			CONTROLLED Signed by: Le Thi Hang Date: 16/06/2025 14:56:42 Certified by: Vietsovpetro CA	Signed by: Гайнутдинов Евгений Нурлыгалиевич Date: 17.06.2025 07:11:49 Certified by: Vietsovpetro CA	Signed by: Авдеев Андрей Сергеевич Date: 17.06.2025 12:27:07 Certified by: Vietsovpetro CA
			DC: L.T.HANG	**ENG. MGR: GAYNUTDINOV**	**PRO.MGR: AVDEEV**
0	IFA		Signed by: Святохо Вячеслав Вениаминович Date: 16.06.2025 11:04:10 Certified by: Vietsovpetro CA		Signed by: Исатов Дмитрий Олегович Date: 16.06.2025 11:09:52 Certified by: Vietsovpetro CA
REV.	**DES.**	**DATE**	**PREPARED: SVYATOKHO**	**CHECKED: SVYATOKHO**	**DEPT.MGR: ISATOV**

Văn bản này được xác thực tại https://eoffice.vietsov.com.vn với số định danh: 327/25-CV-TDH/NIPI

TRACK CHANGES

No	Rev.	Content of Change	Note
1	0	Issued for approve	

Văn bản này được xác thực tại https://eoffice.vietsov.com.vn với số định danh: 327/25-CV-TDH/NIPI

TABLE OF CONTENTS

1. INTRODUCTION 4

2. ADDENDUM 5

Văn bản này được xác thực tại https://eoffice.vietsov.com.vn với số định danh: 327/25-CV-TDH/NIPI

1. INTRODUCTION

BK-10A Wellhead Platform belongs to Vietsovpetro JV. It will be located in Block 09-1, White Tiger oil field, offshore the Socialist Republic of Vietnam.

BK-10A is connected with BK-10 by a linking bridge. BK-10A is an unmanned platform with 12 slots (03 spare slots) and will be remotely controlled from the host platform BK-10 via fiber optic cable.

There will be 09 production wells on BK-10A (02 wells will be converted into water injection wells in future as planned) and 03 wells can be added in the future.

Based on the criterion of the need for production and maximizing the return on investment, BK-10A will be considered to have the minimum facilities. The full well stream of BK-10A will be gathered together with the produced fluid of BK-10 and BK-1, preliminarily separated on BK-10 and then transferred to CPP-2.
The scope of this project is detailed engineering design for the BK-10A Wellhead Platform, Linking Bridge and modification of BK-10.

Location of BK-10A and related platforms as below.

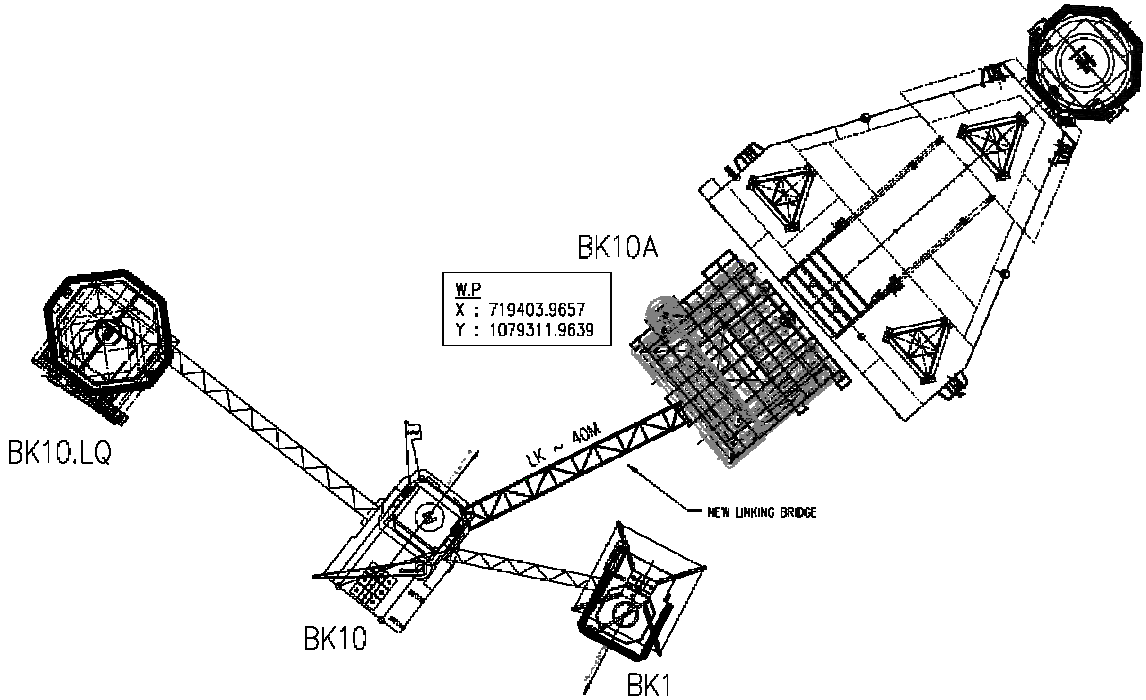

Figure 1: Location of the BK-10A Wellhead Platform and related platforms

Văn bản này được xác thực tại https://eoffice.vietsov.com.vn với số định danh: 327/25-CV-TDH/NIPI

2. ADDENDUM

This document uses the Typical Engineering Documentation for this Project. However, some design intends or requirements may require to be revised to fit with Project's purpose. This section lists changes in the applied typical documents, originating in Typical Engineering Documentation for any reason including those indicated in Table 1. These changes are identified in this Addendum to the applied typical document, identifying the document and section affected and the required change.

VENDOR shall review the required changes in conjunction with the referenced document and project's engineering documents.

The type of modification shall be defined and indicated in subsequent text as follows:

- ✓ "ADD" - Indicates the following statement(s) is/are added to the Company referenced text.
- ✓ "DELETE" - Indicates the following statement(s) is/are deleted from the Company referenced text.
- ✓ "REPLACE WITH" - Indicates the following statement(s) is/are revision(s) to the Company referenced text.

Table – 1: List of changes

Section	Current Statement or Requirement	Revised to
Page 16/24 Sec. 5.10	"fluorescent"	REPLACE WITH: "LED"
Page 16/24 Sec. 5.10	"Recessed luminaires fixed to ceiling in living quarters shall be certified with minimum B15 fire rating to be compatible with the ceiling installation."	DELETE

Văn bản này được xác thực tại https://eoffice.vietsov.com.vn với số định danh: 327/25-CV-TDH/NIPI

VIETSOVPETRO

RESEARCH AND ENGINEERING INSTITUTE FOR OFFSHORE OIL AND GAS

VIETSOVPETRO
RESEARCH & ENGINEERING INSTITUTE

AGREED BY
Deputy General Director of Vietsovpetro

Tran Xuan Hoang

07 / 09 /2020

APPROVED BY
Chief Engineer of Vietsovpetro

LIÊN DOANH VIỆT - NGA VIETSOVPETRO

Tran Van Vinh

04 / 09 /2020

TYPICAL ENGINEERING DOCUMENTATION

DOCUMENT TITLE : **SPECIFICATION FOR ELECTRICAL REQUIREMENT FOR PACKAGE EQUIPMENT**

DOCUMENT No. : **VSP-NIPI-TYP-TS-ES2-SP-10**

AGREED:	Name	Date
Capital Construction Department		6/9/20
Material and Equipment Department		29/3/20
Mechanical and Energy Division		17/03/20

CONTROLLED

REV.	DESCRIPTION	DATE	PREPARED	CHECKED	CHIEF DEPART.	ENG. MANAGER	PRO. MANAGER
0	IFA	28/02/2020	P.X.VUONG	T.N.BINH	T.H.TOAI	T.D.HAI	B.T.HAN

Văn bản này được xác thực tại https://eoffice.vietsov.com.vn với số định danh: 327/25-CV-TDH/NIPI

Change Log

REV	SECTION	PAGE	CHANGE DESCRIPTION

Reference Documents

VSP-NIPI-TYP-TS-ES2-SP-08	SPECIFICATION FOR LV MOTORS
VSP-NIPI-TYP-TS-ES2-SP-09	SPECIFICATION FOR ELECTRICAL CABLES
VSP-NIPI-TYP-TS-ES2-SP-11	SPECIFICATION FOR ELECTRICAL BULK MATERIALS
VSP-NIPI-TYP-TS-ES2-SP-13	SPECIFICATION FOR ELECTRICAL HEAT TRACING
VSP-NIPI-TYP-TS-ES2-DS-08	DATASHEET FOR LV MOTORS (TYPICAL)

Văn bản này được xác thực tại https://eoffice.vietsov.com.vn với số định danh: 327/25-CV-TDH/NIPI

TABLE OF CONTENTS

1.0	**PURPOSE**	**5**
1.1	Definition of Terms	5
1.2	Abbreviations	5
1.3	Statement of Compliance	6
2.0	**CODES, STANDARDS AND APPLICABLE DOCUMENTS**	**6**
2.1	IEC Standards	6
2.2	Other Standards	7
2.3	Order of Precedence	8
3.0	**ENVIRONMENT CONDITIONS**	**8**
4.0	**TECHNICAL REQUIREMENTS**	**9**
4.1	Operating Conditions	9
4.2	Electrical Characteristics	9
5.0	**DESIGN AND CONSTRUCTION**	**10**
5.1	General	10
5.2	Electric Motor	10
5.3	Motor Starter	10
5.4	Local Control Station	11
5.5	On-Skid Wiring	11
5.5.1	Cable Trays and Ladders	11
5.5.2	Junction Boxes	12
5.5.3	Cabling	12
5.5.4	Cable Colour and Identification	13
5.6	Enclosures	14
5.7	Heaters	15
5.8	Cable Glands	16
5.9	Multi-Cable Transits (MCT)	16
5.10	Lighting	16
5.11	Heat Tracing	17
5.12	Earthing System	17
5.13	Nameplates	18
5.14	External Connections	18
5.15	Painting and Protective Coating	18
6.0	**INSPECTION, TESTING AND CERTIFICATION REQUIREMENTS**	**19**
6.1	General	19
6.2	Inspection and Testing	20
7.0	**SPARE PARTS**	**20**
8.0	**PREPARATION FOR SHIPMENT**	**21**

Văn bản này được xác thực tại https://eoffice.vietsov.com.vn với số định danh: 327/25-CV-TDH/NIPI

9.0	GUARANTEE	21
10.0	QUALITY ASSURANCE	21
11.0	CERTIFICATION AND DOCUMENTATION	21
12.0	TECHNICAL ASSISTANCE	23
13.0	TRAINING PROGRAMME AND MAINTENANCE SUPPORT	24

Văn bản này được xác thực tại https://eoffice.vietsov.com.vn với số định danh: 327/25-CV-TDH/NIPI

1.0 PURPOSE

This specification defines the minimum requirements for the supply, design, materials, fabrication, inspection, testing, and painting, preparation for shipment and documentation for the Electrical Equipment assembled as part of a mechanical package or instrument package for VSP's project. The VENDOR shall be responsible for all calculations and design to guarantee component construction and system performance in accordance with specifications, codes, standards, data sheets and drawings.

1.1 Definition of Terms

Within this document the following definitions shall apply:

COMPANY	Vietsovpetro Joint Venture
CONTRACTOR	The company or consortium, which is awarded the main EPC Contract for the project
VENDOR	The party that manufactures or supplies equipment and services to perform the duties specified by the CONTRACTOR
SHALL	Indicates a mandatory requirement
SHOULD	Indicates a recommendation

1.2 Abbreviations

The abbreviations (and their definitions) listed below may be used in this document:

AC	Alternating Current
DC	Direct Current
DCS	Distributed Control System
ESD	Emergency Shut Down
FAT	Factory Acceptance Test
HV	High Voltage
IEC	International Electrotechnical Commission
IP	Ingress Protection
I.S.	Intrinsically Safe
LCS	Local Control Station or Remote Control Unit (RCU)
LSZH	Low smoke zero halogen
LV	Low Voltage
MCB	Miniature Circuit Breaker
MCCB	Moulded Case Circuit Breaker
MPR	Motor Protection Relay

Văn bản này được xác thực tại https://eoffice.vietsov.com.vn với số định danh: 327/25-CV-TDH/NIPI

PTC	Positive Temperature Coefficient
RTU	Remote Terminal Unit
VSDS	Variable Speed Drive System
FGS	Fire and Gas System
SDRL	Supplier Document Requirement List
SMDL	Supplier Master Document List

1.3 Statement of Compliance

VENDOR shall guarantee the equipment complies with this specification and is properly designed, constructed and suitable for the specified requirements.

The equipment shall be tested in the VENDOR's works to prove capability and compliance with this specification. All tolerances shall be in accordance with this specification, and relevant IEC standards.

If the equipment fails to comply with the specification, COMPANY/CONTRACTOR reserves the rights to reject the equipment, or allow the VENDOR to rectify the problem and retest, free of charge to the COMPANY/CONTRACTOR.

The VENDOR shall notify the CONTRACTOR of any apparent conflict between this Specification, Drawings, Datasheets, Codes and Standard, and any other relevant documents. Resolution and/or interpretation precedence shall be obtained from CONTRACTOR in writing before proceeding with design/ manufacture.

All deviations from the requirements of the specifications shall be obtained approval from COMPANY/CONTRACTOR in writing before proceeding with design/ manufacture.

2.0 CODES, STANDARDS AND APPLICABLE DOCUMENTS

The electrical system design shall generally comply with the latest revision and relevant sections of the following regulations, standards and codes of practices.

The applicable international codes and standards are as follows:

IEC International Electrotechnical Commission

ISO International Organization for Standardisation

API American Petroleum Institute

DNV Det Norske Veritas

Note: Unless specifically designated by date, the latest edition of each publication shall be used, together with amendments, supplements or revision thereto.

2.1 IEC Standards

IEC 60050	International electro-technical vocabulary
IEC 60051	Direct acting indicating analogue electrical measuring instruments and their accessories.

Văn bản này được xác thực tại https://eoffice.vietsov.com.vn với số định danh: 327/25-CV-TDH/NIPI

IEC 60076	Power transformers
IEC 60079	Electrical Apparatus for explosive gas atmosphere
IEC 60228	Conductors of insulated cables
IEC 60269	Low voltage fuses
IEC 60331	Fire resisting characteristics of electric cables
IEC 60332	Tests on electric cables under fire conditions
IEC 60445	Basic and safety principles for man-machine interface, marking and identification
IEC 60446	Basic and Safety Principles for Man-machine interface, marking and identification – Identification of conductors by colour or alphanumerics.
IEC 60529	Degrees of protection provided by enclosures (IP Code)
IEC 60664	Insulation Coordination for equipment within Low-voltage Systems Including Clearances and Creepage Distances for Equipment
IEC 60947	Low voltage switchgear and control gear
IEC 61000	Electromagnetic Compatibility (EMC)
IEC 61439	Low voltage switchgear and controlgear assemblies
IEC 61537	Cable management - Cable tray systems and cable ladder systems
IEC 61892	Mobile and Fixed Offshore Units – Electrical Installations

2.2 Other Standards

DNVGL-OS-D201	Electrical Installation
DNVGL-OS-D301	Fire Protection
DNVGL-OS-A101	Safety Principles and Arrangements
NFPA 70	National Electrical Codes
NEMA MG 1	Motors and Generators
IEEE Std 515	IEEE Standard for the Testing, Design, Installation, and Maintenance of Electrical Resistance Heat Tracing for Industrial Applications
NEMA VE 1	Metallic Cable Tray Systems
NEMA	National Electrical Manufacturers Association
API 505	Recommended Practice for Classification of Locations for Electrical Installations at Petroleum Facilities Classified as Class 1, Zone 0, Zone 1 and Zone 2

The design and engineering of the electrical installation shall satisfy all statutory requirements of the national and/or local authorities.

Văn bản này được xác thực tại https://eoffice.vietsov.com.vn với số định danh: 327/25-CV-TDH/NIPI

The electrical installation shall be suitable for the site conditions.

In the event of contradiction between the requirements of this document, IEC, ISO, or IP, the IEC shall prevail, provided the statutory obligations are satisfied.

2.3 Order of Precedence

Order of precedence in case of conflict between documents shall generally be:

- This Specification
- Reference Project Standards, Data Sheets, Specifications and Drawings
- International Codes and Standards

The above order of precedence is only a general guide, where a conflict and/or discrepancy exist between this specification and the above documents, drawings, codes, and/or standards, it is the responsibility of the VENDOR to bring it to the attention of the COMPANY/CONTRACTOR immediately for decision and disposition of the discrepancy or conflict.

In the event that the VENDOR fails to highlight any discrepancies and/or conflicts, the most stringent requirements shall apply. COMPANY/CONTRACTOR's decision shall be binding on the VENDOR without any additional cost and schedule impact.

3.0 ENVIRONMENT CONDITIONS

All electrical equipment installed outdoors shall be suitable for operation on offshore environment conditions. Electrical equipment installed indoors shall normally be operated in air conditioned environment; however they shall be suitable for continuous and short time duty in the outdoor environmental conditions prevailing at site, without temperature rise of any part of the electrical equipment exceeding the maximum permissible temperature rise values stipulated in the relevant IEC standards. The design environmental and climatic data are summarised below:-

Outdoor

- Atmosphere : Saliferous and Marine
  - Ambient Temperature
    - Maximum : 39°C
    - Minimum : 20.5 °C
    - Average : 27.1 °C
    - Design : 40 °C
  - Relative humidity
    - Maximum : 100 %
    - Minimum : 20 %
    - Average : 80 %

Indoor

- Indoor Ambient Temperature : 24°C ± 2°C (Switchgear & MCC Room with air conditioning)

For all the other relevant environmental data, refer to Process Design Basis of Project

Văn bản này được xác thực tại https://eoffice.vietsov.com.vn với số định danh: 327/25-CV-TDH/NIPI

4.0 TECHNICAL REQUIREMENTS

4.1 Operating Conditions

The package electrical equipment shall function without any effect on its reliability under ambient conditions. The package electrical equipment shall be tropicalised.

The equipment shall be suitable for operating in offshore environment, based on the site ambient conditions specified in the data sheets or specification documents. The outdoor atmosphere shall be assumed to be salt-laden, corrosive and humid as commonly encountered in offshore installations.

The environmental conditions and power supply in which the package electrical equipment is operated in is specified in the data sheets. As a generally guide, the environment conditions and climatic data are summarised in clause 3.0.

Where the package is to be installed in a hazardous area, the VENDOR shall ensure that all electrical equipment and installations forming part of the package meet the requirements of IEC 60079. Packaged units to be installed in outdoor non-hazardous areas within process facilities shall be suitable for installation in Zone 2, Gas Group IIA, Temperature Class T3 areas.

Where the VENDOR's standard design does not meet the operating conditions, the VENDOR shall give details of the technical changes and commercial impact of complying with stated conditions.

All components shall be protected for operation in tropical climate i.e. they shall be moisture and fungus proof. All exterior hardware, hinges, etc shall be 316L stainless steel.

4.2 Electrical Characteristics

The distribution voltage for the package electrical equipment shall be specified in Technical Requirement for each package. The electrical system shall be designed based on the following criteria:

a) Under steady state condition:

- nominal system voltage : ±5%
- nominal system frequency : ± 2%

b) Voltage dip during large motor starting as per the following :

- Voltage dip at Switchgear/MCC bus : 15%
- Motor terminal for HV motors (DOL) : 20%
- Motor terminal for LV motors (DOL) : 20%

Voltage transient due to load variation tolerance shall be ±20% from nominal voltage as per IEC 61892-1.

If other voltages are required, transformation and conversion equipment shall be furnished with the package electrical equipment.

Equipment and loads shall be designed to operate at the following voltage levels (Refer to Technical requirement for final voltage levels):

- For motor loads 200kW and below : 380V, 50Hz, 3 phase
- For motor control (from starter) : 220V, 50Hz, 1 phase

Văn bản này được xác thực tại https://eoffice.vietsov.com.vn với số định danh: 327/25-CV-TDH/NIPI

- For lighting loads : 220V, 50Hz, 1 phase
- For general service receptacles and motor anti-condensation heater : 220V, 50Hz, 1 phase
- For package unit control panels (critical loads): 220-230V UPS, 50Hz, 1 phase

5.0 DESIGN AND CONSTRUCTION

5.1 General

The design of package electrical equipment shall incorporate safeguards and protective devices to ensure safe operation of the packaged equipment with regard to personnel as well as equipment.

Packaged equipment shall be supplied with the electrical equipment and components factory installed. VENDOR's field cabling shall terminate directly on the electrical equipment, local control panel or junction boxes on the skid.

In case the packaged equipment itself contains possible sources of hazardous vapours, it shall be VENDOR's responsibility to determine the location, the nature and the extent of the classified areas in accordance with IEC 60079.

VENDOR shall provide an itemized list of flame-proof material used, including classification, VENDOR, certifying agent and certificate number. The certifying agent must be an approved certifying agent as listed in IEC 60079.

Where an air pressurization system form part of the equipment, all provisions for personnel entry and exit together with interlocks, alarms and protection systems shall be subject to approval by COMPANY/CONTRACTOR. Air purged/ pressurized electrical equipment shall only be used if approved by COMPANY/CONTRACTOR.

The package electrical equipment shall be designed for an expected lifetime of twenty five (25) years. All equipment and components shall be tropicalized.

The equipment shall be located such that it can easily be maintained in its service position.

5.2 Electric Motor

Motors shall be supplied in accordance with Specification for LV Motors respectively

In general, electric motors shall have an ingress protection of IP 56 as minimum for outdoor installation and IP44 as minimum for indoor installation. For submersible motors, ingress protection of IP 68 shall be met.

Motor rating greater than 25 kW shall be equipped with anti-condensation heater. VSDS driven LV motors should be considered to provide with PTC thermistors for protection against overheating. Embedded RTD sensors PT 100 shall be provided for motors that are driven by variable frequency drives (VFDs).

5.3 Motor Starter

All motor starters will be located in motor control center or switchboards provided by COMPANY/CONTRACTOR, unless otherwise specified.

Cables from motor starters shall be connected directly to motors, anti-condensation heaters, local control station (LCS) and safety switches located in the packaged equipment unit. LCS's shall be located opposite side of the motor to the main terminal box.

Văn bản này được xác thực tại https://eoffice.vietsov.com.vn với số định danh: 327/25-CV-TDH/NIPI

For VSDS controlled motors, safety switches shall be employed for local isolation of motor feeder from upstream VSD.

A heater ON/OFF safety switch shall be employed for motors space heater circuit which is powered from starter and interlocked so that heater shall be isolated when motor start, and installed adjacent to the motor's LCS.

All LV motor starters shall have MCCB instead of switch / fuse incomers and shall equip with intelligent motor protection relays. For LV motors which are rated equal or larger than 15% source capacity, electronic soft-starters/start-delta starter shall be used.

5.4 Local Control Station

LCS's shall be of push button switch type. Push button type LCS with running indicating light shall be provided for all electric motors.

LCS installed in hazardous area shall have minimum explosion protection category suitable for Zone 2, Gas Group IIA, Temperature Class T3. The enclosure installed outdoor shall be either 316L stainless steel or LM6 material with minimum ingress protection of IP56. The LCS installed indoor shall have IP44 as minimum.

Glass-fiber reinforced polyester (GRP) may be used as alternative LCS enclosures (but they shall not be installed where they are exposed to direct sunlight).

An ammeter shall be provided on LCS for motor rated ≥ 30 kW.

Local/Off/Remote switch, Start/Stop push buttons, Indication lamps shall be provided on LCS.

LCS's and any other auxiliary control equipment for the package unit shall be provided by the CONTRACTOR.

5.5 On-Skid Wiring

5.5.1 Cable Trays and Ladders

Interconnecting cables between any skid-mounted equipment shall be supported on cable ladders or cable trays that are fixed to the skid (not clamped). Cable ladders/trays shall be installed such as not to obstruct access for operation and maintenance, access to junction boxes, etc.

Cable ladders/trays from skid edge to cable destination shall be provided.

Cable ladders/trays and fittings shall be made of heavy duty 316 stainless steel. The working (allowable) load capacity shall be Class C to NEMA VE 1. Fasteners and hardware for connector plates and fittings shall be 316 stainless steel.

Maximum side rail height shall be 150mm for ladders and 50mm for trays. Maximum rung spacing for ladders/trays shall be 300mm.

Supports for cable ladders/trays shall be painted or galvanized carbon steel. In order to avoid galvanic corrosion, insulation pads shall be inserted between cable ladder and support bracket. Cables shall be fixed to ladders/trays using nylon sheathed stainless steel cable tie wraps.

Cable trays/ladders shall be bonded to the skid earth.

Cable tray/ladders covers shall be provided where:

- Mechanical damage to the cables are likely to occur during construction, operations or maintenance.
- Oil or chemical spillage can be expected.

Văn bản này được xác thực tại https://eoffice.vietsov.com.vn với số định danh: 327/25-CV-TDH/NIPI

- Sun shielding against direct solar radiation.

Separate racking/ tray work shall be installed for the following electrical systems:

- HV power
- LV power and control cables for non-instrument control (i.e. control stations)
- Instrument cables

The racking/ tray work shall be sized to carry cables from the skid edge, where connected directly to the packaged equipment, as well as the package own cables.

5.5.2 Junction Boxes

Junction boxes for outdoor installation in hazardous area shall have minimum explosion category suitable for Zone 2, Gas Group IIA, Temperature Class T3 and minimum ingress protection of IP 56. Enclosure shall be made of electro-polished 316Lstainless steel or aluminum alloy LM6. The cover shall be fitted with neoprene gasket/seal and captive stainless steel screws. Earth stud shall be provided.

Indoor junction boxes may be made of high impact resistant, flame retardant glass reinforced polyester (GRP) and suitably certified junction boxes for hazardous area in which it is located with internal ground continuity plate. Indoor junction boxes shall have IP44 as minimum.

All cable entries to the junction boxes shall be from the bottom except for lighting junction boxes where side entries are acceptable.

Terminals shall be rail mounted Klippon type or approved equal.

Junction boxes shall be grouped together at skid's edge and shall be installed at sufficient height to allow bottom entry of cables.

5.5.3 Cabling

Cable shall comply with Specification for Electrical Cables and shall be designed based on the following criteria:

- In general application, multi-core cable shall be EPR/TCWB/LSZH, flame retardant and with an oxygen index of not less than 30, temperature index of not less than 260°C and type tested in accordance with IEC 60332-3 Category A (reduced propagation) and acidic emission of max. 17% (by weight) in accordance with IEC 60754.
- Cable running for critical services or exposed to high risk areas shall be mica glass type (MGT) primary insulation, EPR insulated, fire resistant in accordance with IEC 60331, withstand with temperature of 750°C for three hours, low smoke zero halogen (LSZH), flame retardant in accordance with IEC 60332-3 category A (reduced propagation).
- VFD motor feeder shall be 3-core cables with three symmetrical ground conductors; single core cables shall not be used for VFD application.

The minimum size of power and control cables shall be 2.5 mm^2 and 1.5 mm^2 respectively.

Individual conductors shall be identified at both ends by means of ferrules of insulation material, marked in accordance with the associated wiring diagrams. Compression type wire pins shall be used.

Insulated conductors shall be mounted directly to metal, but shall be kept in position by means of insulated tubes, channels cleats or plastic strips.

Văn bản này được xác thực tại https://eoffice.vietsov.com.vn với số định danh: 327/25-CV-TDH/NIPI

VENDOR shall be responsible for cable volt-drop, rating, installation connection and mechanical protection of all cables in this scope.

Cables entering equipment which may be removed or replaced for maintenance shall have its cable looped prior to entry. Wiring shall be continuous without joints/splices.

5.5.4 Cable Colour and Identification

The cables outer sheath colour shall be as follows:

Low voltage cables	-	BLACK
High voltage cables	-	RED
Fire Resistant cables	-	ORANGE
Earthing cables	-	Striped GREEN/YELLOW

The identification colour for AC power cables insulation shall be as follows:

Outer Sheath	-	see details above
Single Conductor	-	BLACK
Twin Conductors	-	BROWN (L) and BLUE (N)
Three Conductors	-	BROWN (L1), BLACK (L2) and GREY (L3)
Three Conductors + PE with	-	BROWN (L1), BLACK (L2), GREY (L3) and GREEN YELLOW stripe
Four Conductors	-	BROWN (L1), BLACK (L2), GREY (L3) and BLUE (N)
Four Conductors + PE	-	BROWN (L1), BLACK (L2), GREY (L3), BLUE (N) and GREEN with YELLOW stripe

The identification colour for DC power cables insulation shall be as follows:

Outer Sheath	-	see details above
Positive Conductor	-	BROWN (+ve)
Negative Conductors	-	GREY (-ve)

The identification colour for control cables insulation shall be as follows:

Outer sheath	-	see details above
Conductors	-	BLACK with white numeral markings for core identification.

The identification colour for the Instrumentation cables outer sheath shall be as follow:

IS cable :	-	(Light) Blue
Non-IS:	-	other color from Blue

The identification colour for multi pair control cable insulation shall be as follows:

Outer sheath	-	see details above
Conductor	-	Single pair: White/Black

Văn bản này được xác thực tại https://eoffice.vietsov.com.vn với số định danh: 327/25-CV-TDH/NIPI

- Multi pair: White/Black (the pairs shall be identified numerically and sequentially).

The identification colour for multi triad cable insulation shall be as follows:

Outer sheath
- See details above

Conductor
- Single triad: White/Black/Red
- Multi triad: White/Black/Red (the triads shall be identified numerically and sequentially).

5.6 Enclosures

All junction boxes, local control panels etc. to be installed in an outdoor environment shall have a degree of protection of IP 56 minimum, certified for the area classification (see Section 4). Ingress Protection for switch-rack assembly enclosure shall also be min. IP56. All enclosures shall be made of electro-polished 316L stainless steel, otherwise specified.

All motor enclosures shall have a minimum ingress protection of IP 56 for outdoor, min IP 44 for indoor without air conditioner.

The degree of ingress protection for electrical equipment to be installed indoor shall be minimum IP44 and IP22 (for air conditioning room), unless otherwise specified in the relevant design drawing or datasheets.

All enclosures specified for outdoors shall, in addition to the above requirements, be designed to shed rain water and prevent the accumulation of standing water on any part of the enclosure. An Ex-certified breather/drain device shall be installed in each outdoor enclosure.

Internal cooling of enclosures shall be by natural air circulation.

Enclosure (or box) that is used to house battery banks shall be design in compliance to IEC 60079-7. Ventilation opening for the battery enclosure shall provide sufficient ventilation such that the hydrogen concentration in the battery box/enclosure during type test does not exceed 2% by volume as per IEC 60079-7.

All internal surface of the battery box/enclosure, when of metallic material shall be completely lined with an insulating layer. Internal surfaces shall not be adversely affected by the action of the electrolyte. VENDOR shall submit the type test certificates for the battery box/enclosure confirming that the proposed battery box/enclosure is suitable and design to house the batteries.

Enclosure for relay boxes, control stations, or other similar equipment shall be 316L stainless steel or LM6 to provide a lasting rigid structure. Control panels shall be made of material suitable for its hazardous area utilisation and shall be of at least 1.5mm in thickness. Cover doors shall be hinged gasket and pad lockable. Control enclosures over 1.2 metres in height shall have three point latching mechanisms. Wall mounted equipment shall be provided with external fixing lugs.

Control panels should be located indoors where possible, however, where an outdoor location is specified, a suitable weather shelter shall be provided in addition to the requirements specified above.

Separate junction boxes, terminal boxes, terminals, cable duct and wiring/cabling routes shall be provided for AC and DC circuits.

Văn bản này được xác thực tại https://eoffice.vietsov.com.vn với số định danh: 327/25-CV-TDH/NIPI

Each terminal shall be clearly and permanently numbered on the body of the terminal itself. Terminals shall be of the non-loosening type.

Not more than one conductor will be connected per terminal. If more than one conductor has to be terminated at the same point, VENDOR shall provide the required number of terminals linked together. The link shall not occupy the same place as the conductor.

Terminal blocks shall be arranged and positioned to enable easy access for cable terminations, testing, inspection and maintenance. Sufficient terminals shall be provided to terminate all the spare cores of multicore cables. Each terminal block shall be provided with a minimum of 25% spare terminals.

Within enclosures, separately mounted and screened terminal blocks/ strips shall be provided for each voltage level. Terminals for 3 phase supplies shall be phase segregated by installation of barriers.

All live terminals and components shall be shrouded or protected by phase barrier to a degree of at least IP20 so as to prevent inadvertent contact with personal when doors are open.

Separate gland plates for VENDOR cable, compatible with the appropriate standards and Hazardous Area Certification shall be provided. The gland plates shall be removable and undrilled.

Site drilling for cable entry of certified Ex'd' terminal boxes are not allowed. All Ex'd' enclosure shall be pre-drilled (according to CONTRACTOR's cable entry size) and certified at the VENDOR's Works.

Certified plugs shall be used to blank off all unused entries in certified Ex'e' and Ex'd' equipment and similar certified adaptors shall be used to match metric glands to non-metric entries.

The junction boxes provided shall be adequately rated and sized to accept the current carrying capacity of the external cabling. Terminals shall either be of the pressure clamp or bolted lug type. Pinch screw terminals where the screw bores directly onto the conductor are not acceptable. Space shall be provided for 20% additional spare terminals.

Control panels shall be equipped with internal lighting and door switches when required or where specified.

Gaskets shall be of a rot-proof material i.e. neoprene or synthetic rubber, with resistance to splitting.

Floor standing enclosures shall be provided with facilities to enable them to be bolted to the floor or structure and be suitable for top lifting. Eyebolts, lifting frames or other suitable means of lifting shall be provided.

All control panels shall be provided with a document pocket, securely fixed to the inside of the door, to hold relevant drawings etc.

5.7 Heaters

If required, control panels shall be fitted with anti-condensation heaters. Heating power shall be calculated for the equipment/ panel heat dissipating surface area with consideration given to the site ambient conditions.

Anti-condensation heaters shall be automatically controlled via an integrated thermostat. The heater shall operate at 220-230V AC, 50Hz (Refer to Technical requirement for final voltage levels).

Văn bản này được xác thực tại https://eoffice.vietsov.com.vn với số định danh: 327/25-CV-TDH/NIPI

The heaters shall be separately protected and switched for isolation purposes by means of a miniature circuit breaker.

5.8 Cable Glands

Cable glands shall be selected to suit the type of cable and termination box/enclosure, and shall be of the appropriate type of protection, e.g. Ex'd', Ex'e'. Effective earth continuity shall be ensured between the cable braid and the gland plate or the internal earth terminal.

Nickel plated brass compression glands with an armour-clamping feature with inner and outer seals providing minimum ingress protection of IP 56, ISO metric threads, complete with locknut and earth tags shall be provided.

All steel braided armoured cable entries into equipment shall be made by means of suitable brass double compression cable glands. Barrier glands shall be used if the cables are not of the effectively filled type.

5.9 Multi-Cable Transits (MCT)

MCTs shall be used for cable penetration into package's enclosures. If necessary, cable penetration through acoustic hoods, etc. shall also be via MCT.

External cables shall enter the package enclosure at the skid edge via MCTs, certified for Zone 1, Gas Group IIA, Temperature Class T3. The MCTs shall provide a gas tight seal.

MCT shall be suitable for marine rated, fire rating to 1 hour A60 rated and complete with frame, wedge, stay plates, RM modules and RM spare modules.

A minimum of 30% spare ways within the MCT shall be provided complete with filler blocks.

MCT frames shall be completely filled prior to shipment, unfilled spaces which require additional cables to be installed elsewhere shall be filled with temporary blank blocks and sealed before leaving the VENDOR's works.

VENDOR shall ensure that non-magnetic frames and stay plates are used in transits containing single core cables.

5.10 Lighting

On-skid lighting for walkways, sight-glasses, instrument read-out and local control panels shall be provided by the VENDOR/ CONTRACTOR.

Areas shall generally be illuminated with fluorescent lighting fixtures or high-pressure sodium lighting fixtures suitable for the hazardous area classification in which they will be installed. For installations in outdoor process areas, lighting fixtures suitable for Zone 1 or Zone 2, Gas Group IIA, Temperature Class T3 hazardous area (where required) with minimum ingress protection of IP 56 shall be used. In order to maintain commonality, lighting fixtures offered in equipment packages shall be identical to those used by platform fabricator.

In general, materials of luminaires shall be as follows:

- For outdoor locations or in enclosed space without air conditioning, housings of luminaires shall be of either marine grade SS316, Marine grade Aluminum/ Aluminum alloy material. Suitable for zone 1 or zone 2 application (where required).
- For indoor locations with air-conditioning, fluorescent luminaire housings shall be made of painted/powder coated steel, glass reinforced polyester (GRP).

Văn bản này được xác thực tại https://eoffice.vietsov.com.vn với số định danh: 327/25-CV-TDH/NIPI

- Recessed luminaires fixed to ceiling in living quarters shall be certified with minimum B15 fire rating to be compatible with the ceiling installation.

The lighting circuits shall terminate in a junction box at skid's edge for connection to lighting distribution system or connected directly to the local control panel on the skid.

Emergency/escape lighting shall be provided within the package equipment in areas where it is necessary to operate controls, valves or switchgear to allow safe shutdown of the package or facility. Emergency/escape lighting shall be provided with integral 90 minutes battery backed power supply.

5.11 Heat Tracing

Heat tracing requirement on package equipment shall be furnished by the package vendor.

The electrical heat tracing system shall be designed based on self-regulating / self limiting heating cables and according to IEEE std 515.

Design and installation of the package Vendor's furnished heat tracing installation shall comply with Specification for Electrical Heat Tracing.

Electrical power to the package heat tracing circuits shall be derived from platform distribution panel.

5.12 Earthing System

All electrical equipment on the package unit shall be bonded to the package unit skid. Earthing system with common earth dispatcher and cables, termination and busbars within the package shall be the VENDOR's responsibility.

Where driven equipment, vessels, tanks, instruments etc. comprising part of a package is directly welded to the skid, no additional earth connection is required.

High voltage equipment and equipment mounted on anti-vibration mounts, or similarly insulated, shall be provided with two earth studs located diametrically opposite each other. These shall be earthed to the skid with suitably sized earthing cable.

The Instrument I.S. earth and Instrument clean earth shall have earthing system separate from other power equipment.

The earthing conductors shall be in accordance wih IEC 61892-6.

Earth connections shall be made with crimped type connectors. Mechanical fixing points shall not be used for connecting earth conductor.

At least two earthing bosses bolted diagonally opposite, suitable for the connection of a 70 mm2 cable shall be provided for the purpose of connecting the package unit to the main earth system. The bosses shall be of a similar material to the skid base, tapped M10 and filet welded to the package. VENDOR shall ensure electrical continuity of all metal components in the package with the skid earthing boss.

Earthing and bonding conductors shall be single core, stranded annealed copper conductors with a striped yellow/green outer sheath.

The position of all earthing connections shall be visible and easily accessible. Earthing points shall be protected against corrosion and designed to ensure that effective electrical and mechanical connections can be made.

Where non-metallic enclosures are used, means shall be provided to preserve the electrical continuity of the braid and/ or metallic sheaths of cables.

Văn bản này được xác thực tại https://eoffice.vietsov.com.vn với số định danh: 327/25-CV-TDH/NIPI

5.13 Nameplates

All control panels, motors, relay boxes, terminal boxes, field control stations, etc. shall be fitted with nameplates indicating tag (equipment) number and function. In addition, control stations and similar equipment will also carry normal operating function labels i.e. 'stop', 'start', 'on', 'off' etc.Labels shall be fixed by 316L stainless steel self-tapping screws. Labels fixed by adhesives are not acceptable.

For certified equipment, the labels shall be tag number only fixed on the equipment using an epoxy adhesive, with tag and service labels affixed adjacent to the equipment. The means of attachment shall ensure that it does not affect the certification or IP rating of the enclosure.

All internally mounted components in panels e.g. relays, terminal strips, switches etc. shall be labelled adjacent to the components, with references as detailed on VENDOR/ VENDOR's schematic and wiring diagrams.

All withdrawable type units shall be identified in both the fixed and withdrawable parts.

Inscriptions shall be in English language and warning labels and all electrical safety related signage's shall be inEnglish. Nameplates shall be white-black-white laminated plastic, in which the characters shall be black on white background. Warning notice plates shall be red on white background.

The following information shall be clearly marked on the name/rating plate attached to the permanent part of the enclosure:

- Equipment tag number.
- Purchase Order number.
- Year of manufacture.
- VENDOR name.
- Voltage.
- Frequency.
- Full load ampere.
- Net weight.
- Space heater voltage and rating.

5.14 External Connections

All outgoing electrical connections from the packaged unit shall be grouped and wired to interface junction boxes. The boxes shall be supplied and shall be mounted in an accessible position.

For motor equipped with anti-condensation heaters, the supply will be interlocked with the motor contactor to ensure that when the motor contactor is open, the heater is energized.

All terminals shall be easily identifiable.

5.15 Painting and Protective Coating

Painting and protective coating for electrical components and supports shall be in accordance to the latest revision of the Project Painting & Coating Specification or

Văn bản này được xác thực tại https://eoffice.vietsov.com.vn với số định danh: 327/25-CV-TDH/NIPI

VENDOR's standard specification approved by COMPANY/CONTRACTOR (if there is not Painting & Coating Specification in the project).

The treatment and protection of metalwork shall include cleaning, degreasing, rust resisting primers and paint finishes that provide effective protection against corrosion under the functional and climatic conditions.

A careful inspection shall be made to ensure all operating instructions and label plates are in place, legible and have not been obscured during the painting process.

Painting damaged during transit shall be repaired by the VENDOR. The VENDOR shall supply paint, matching the colour used, for field touch-up purpose.

6.0 INSPECTION, TESTING AND CERTIFICATION REQUIREMENTS

6.1 General

COMPANY/CONTRACTOR or its representative shall have free access to the plants of VENDOR and his Sub-VENDOR's during fabrication, assembly, and testing of the equipment. Inspection visit shall be coordinated thru VENDOR's Project Manager.

Prior to shipment, the VENDOR shall carry out the required Factory Acceptance Tests (FAT) in the presence of COMPANY/CONTRACTOR engineers or their appointed representatives.

COMPANY/CONTRACTOR may require additional testing if test results are unsatisfactory or marginal at no additional cost to the COMPANY/CONTRACTOR. Any equipment rejected shall be repaired or replaced to COMPANY/CONTRACTOR's satisfaction and test shall be repeated at VENDOR's cost.

COMPANY/CONTRACTOR shall be given the opportunity to inspect VENDOR's manufacturing facilities including Sub-VENDOR's facilities to confirm that satisfactory quality assurance (Q.A) and production procedures are being implemented. VENDOR shall make available all relevant Q.A. procedures for review.

All rights of COMPANY/CONTRACTOR in respect of Inspection and Testing shall also, upon COMPANY/CONTRACTOR's request, be extended to any and all third parties authorised by COMPANY.

VENDOR shall furnish, immediately on award of order, the names of:

a) The Works Manager and his assistants to whom contact should be made for inspection of the equipment.

b) The Office Engineer and his assistants to whom contact should be made for technical queries, and manufacturing and expediting progress.

During construction of the Equipment, VENDOR shall establish and maintain an inspection and quality control program to ensure adherence to the applicable codes and this specification.

Any unsatisfactory material, equipment, installation, or workmanship shall be replaced or repaired to COMPANY/CONTRACTOR's satisfaction at VENDOR's cost.

All pre-requisites for test such as temporary interconnections, test instruments, etc. as well as the actual conduct and documentation of tests shall be the responsibility of VENDOR.

The VENDOR shall inform COMPANY/CONTRACTOR as part of the bid, if any of the specified tests cannot be performed. In the absence of such a statement, it shall be understood that all requirements of this specification are fulfilled without exception.

Văn bản này được xác thực tại https://eoffice.vietsov.com.vn với số định danh: 327/25-CV-TDH/NIPI

6.2 Inspection and Testing

The following are typical examples of the tests required and are offered for the VENDOR/ VENDOR's guidance:

a) Test all cables (insulation resistance and continuity) after the cables have been glanded to the equipment with the cores isolated.

b) Megger motor windings and transformer windings for grounds and moisture accumulation. Where evidence of moisture accumulation is found, the equipment shall be dried out and re-tested before operation.

c) Check circuit breakers, switches, relays and other equipment for loose connections (both mechanical and electrical) to see that contacts and working parts are correctly aligned and free from dust and foreign matter.

d) Check motors for proper rotation, lubrication and proper alignment.

e) Perform operational tests on all motor control circuits.

f) Perform operational tests on all miscellaneous control switches, alarm and shutdown devices, indicating lights and meters for proper operation.

g) Function test all control panels.

Earthing tests (both continuity and impedance) shall be carried out and results recorded.

Certificates of Test shall be provided for each item of electrical apparatus to prove that it has been satisfactorily tested to meet all requirements of its appropriate manufacturing standards, whether or not witnessed by the COMPANY/CONTRACTOR. Where appropriate, test certificates shall state values for all test results.

VENDOR shall be responsible to carry out all inspection and tests as required at the VENDOR's Works.

The overall responsibility for entire system inspection rests with the VENDOR. However, COMPANY/CONTRACTOR and COMPANY/CONTRACTOR's inspection representative, reserve the right to inspect the packages at any time during manufacture to ensure that materials and workmanship are in accordance with the requirements of the packages datasheets, drawings, the applicable codes and other associated standards. Inspection by COMPANY/CONTRACTOR or its representatives will in no way relieve the VENDOR of any of his responsibilities for ensuring that the equipment meets all the requirements of this specification.

7.0 SPARE PARTS

The VENDOR shall include in their scope of supply the spares required for pre-commissioning, commissioning and start-up as required. A list of pre-commissioning, commissioning and start-up spares considered for each package shall be submitted to COMPANY/CONTRACTOR for review.

A recommended spare parts list for two (2) years of operation shall also be submitted for CONTRACTOR's review and purchase separately.

Recommended spares shall take into account related factors of equipment reliability, costs of parts and availability of equipment service facilities.

All spare parts furnished by the VENDOR shall be wrapped and packed to preserve items as new condition under normal storage anticipated in tropical climates. The same parts shall be properly tagged by stainless steel tags and coded so that later identification as to their intended usage will be facilitated.

Văn bản này được xác thực tại https://eoffice.vietsov.com.vn với số định danh: 327/25-CV-TDH/NIPI

All items supplied shall be packaged separately and clearly marked as 'Spare Parts' and shipped with the equipment. Packing lists shall be furnished complete and in detail so that parts can be handled without un-crating, if desired.

VENDOR shall provide adequate and all commissioning and start-up spares including all VENDOR recommended spares.

8.0 PREPARATION FOR SHIPMENT

The VENDOR shall be responsible for preparation of the equipment for export shipment and completion of all required preservation for storage in tropical climates for a maximum period of 12 months.

A careful inspection shall be made to ensure that all operating instructions and label plates are in place, legible and have not been obscured during painting operations. Each item shall be clearly identified with the VENDOR's name, address, Purchase Order and tag number.

The shipping crates shall be constructed of wood and suitably packed to protect all items against damage during the shipment and storage. Miscellaneous shall be tagged or marked with the tag item number for which they are intended. All such parts shall be suitably boxed, firmly attached to the main item and shipped with the unit.

Protection shall be provided against atmospheric corrosion while in transit and while in outdoor storage. All exposed machined surfaces shall be protected with an easily removable rust preventative compound.

The contents of all boxes or packages shall be recorded in detail on the packing list. The transported package shall have the necessary fastenings, protections and lifting facilities to satisfy lifting and sea fastening loads and restraints. Two complete set of the installation, operating and maintenance instructions shall be packed and shipped with the unit.

9.0 GUARANTEE

The VENDOR shall guarantee all equipment furnished to be in compliance with this specification and drawings.

The VENDOR shall guarantee all the equipment against defective material, design, damage or non-conformity and/ or workmanship.

10.0 QUALITY ASSURANCE

The VENDOR and his Sub-VENDOR shall operate a quality system satisfying the latest ISO 9001 Quality Standards, or agreed equivalent standard, commensurate with the goods and services provided.

The VENDOR shall demonstrate evidence of Quality Assurance in all aspects of the VENDOR's current design and manufacturing practices. Quality Control procedures covering all aspects of design, manufacturing, inspection and test relevant to the equipment shall be included in accordance to the requirements of CONTRACTOR/COMPANY.

11.0 CERTIFICATION AND DOCUMENTATION

The VENDOR documentation requirements together with the required quantities are given on the SDRL forms. As a minimum, VENDOR is responsible to provide documentations as

Văn bản này được xác thực tại https://eoffice.vietsov.com.vn với số định danh: 327/25-CV-TDH/NIPI

defined in this specification. VENDOR is responsible for all documentation in strict accordance with the requirements of the specifications.

CONTRACTOR/COMPANY reserves the right to request additional drawings and documents or copies of drawings and documents to verify Purchase Order compliance without cost variation.

VENDOR shall identify the planned and actual submissions to CONTRACTOR/ COMPANY on their master drawing and document schedules i.e. computerized VENDOR Master Document List (SMDL). The responsibility of updating the SMDL shall rest with VENDOR.

The VENDOR shall furnish soft copies of drawings/documents that are of suitable first generation quality. Drawings that are, in COMPANY/CONTRACTOR's opinion, not of suitable quality will be returned to the VENDOR for resubmission.

Approval of drawings/documents by the CONTRACTOR/COMPANY shall in no way relieve the VENDOR responsibility for the correctness of information, their conformance with stated requirements or acceptability of equipment and materials. This responsibility rests solely with the VENDOR.

The VENDOR shall allow the CONTRACTOR/COMPANY five (05) working days to review and respond to the VENDOR's submission of documentation. The fifteen working days is defined as from time of receipt by the CONTRACTOR/COMPANY to the time of despatch. VENDOR shall allow this review period in his production schedule. However work shall proceed without delay in the event of late return of the documentation by the CONTRACTOR/COMPANY.

A review status will be assigned by the CONTRACTOR/COMPANY to documents submitted by the VENDOR for review or approval. The following review status codes will be used:

Code 1: Approved

Code 2: Approved with comments

Code 3: Document is rejected, to be resubmitted before proceeding

Code 4: For information only

Within 10 working days of receipt of a marked-up document, the VENDOR shall issue a revised document incorporating all comments and other specified details not included in the first issue. The CONTRACTOR/COMPANY will review documents and return with any further comments. If documents are revised, all sheets under cover of one project document number shall have a new revision number and be resubmitted. The document must be complete even if the revision is minor. All such resubmissions (irrespective of the number of times) are part of the VENDOR 's Lump Sum Price.

All documents furnished by the VENDOR shall have a revision code following the document number. For specifications, technical reports and other written material, the following shall apply: Changes in one official issue from the last shall be clearly indicated by a vertical line in the right hand margin adjacent to the current change and in addition the revision number code is to be indicated within a triangle. All changes from the last previous issue shall be thus indicated. Changes to drawings are to be shown in a similar fashion by "clouding in" the change and placing the revision code in a triangle inside the "cloud".

Within 2 weeks after delivery of Equipment/Materials, 1 copy of Final Factory As Built Documentation (draft set) shall be transmitted to CONTRACTOR/COMPANY for review. The required number of sets of Final Documentation shall be submitted after the draft set is accepted. Replacements of any Final Factory As-Built documentation with onshore or offshore as-built as a result of changes is part of VENDOR's Lump Sum Price.

Văn bản này được xác thực tại https://eoffice.vietsov.com.vn với số định danh: 327/25-CV-TDH/NIPI

VENDOR shall submit as a minimum the following information:

- Type test certificates (copies) issued by a recognized testing agency shall be supplied for the cables tray/ ladders and the other equipment/materials (where applicable or according to requirements of certifying agencies)
- Type approval certificates (copies) issued by recognized certifying agencies (BV,DNV-GL, ABS, UL, Lloyd,...) for cables tray/ ladders and the other equipment/materials (where applicable or according to requirements of certifying agencies).
- VENDOR/ VENDOR's final technical offer, technical clarifications and brochures
- Purchase Order
- Equipment data sheet
- Detailed wiring and schematic diagrams
- Outline and General arrangement drawings including weight and floor cut-out drawing
- Interfacing connection diagram
- Electrical single line diagram
- List of electrical consumers with estimated loads
- Inspection and Test Plan
- Factory Acceptance Test Procedures
- Factory Acceptance Test Report
- List of pre-commissioning, commissioning and start up spares
- List of spare parts for 2 years operation
- Operation, maintenance and commissioning manual
- VENDOR/ VENDOR Data Book (Binding containing all drawings, documents and certificates)

FAT document format and requirements shall be compliedwith the requirements of CONTRACTOR/COMPANY.

VENDOR shall at all times, maintain at the VENDOR works/site office and update to current status a master set of red lined as-built drawings as work progresses. This set of master red lined drawings shall not be removed from the VENDOR's works/site office. COMPANY/CONTRACTOR reserves the rights to inspect and review this set of master red lined as-built drawings. If VENDOR needs a set of drawings for field installation, a separate set with "Field Use Only" stamped on every page of the drawings shall be used.

12.0 TECHNICAL ASSISTANCE

If required, VENDOR shall provide technical assistance and support at the integration yard jobsite (onshore fabrication yard) and at site (offshore platform) to successfully complete the work. As a minimum, the VENDOR technical assistance is required for equipment installation, pre-commissioning, commissioning, offshore hook-up, site acceptance test and training (if applicable).

VENDOR shall provide procedures and checklist for equipment pre-commissioning and commissioning including parameters for performance acceptance test.

Văn bản này được xác thực tại https://eoffice.vietsov.com.vn với số định danh: 327/25-CV-TDH/NIPI

VENDOR to quote rates including mobilization/ demobilization, daily rates and response time for onshore fabrication yard and offshore platform technical assistance/support during Bid.

For offshore assistance, the VENDOR personnel shall possess a valid medical and sea survival training certificate.

13.0 TRAINING PROGRAMME AND MAINTENANCE SUPPORT

If required, training program shall be provided by VENDOR to COMPANY.

The rates contained in VENDOR proposal for site support and training services shall be issued to and available/transferable to COMPANY for a period up to 12 months after final acceptance.

Văn bản này được xác thực tại https://eoffice.vietsov.com.vn với số định danh: 327/25-CV-TDH/NIPI

VIETSOVPETRO

RESEARCH AND ENGINEERING INSTITUTE FOR OFFSHORE OIL AND GAS

VIETSOVPETRO
RESEARCH & ENGINEERING INSTITUTE

AGREED BY
Deputy General Director of Vietsovpetro

Tran Xuan Hoang

07 / 04 /2020

APPROVED BY
Chief Engineer of Vietsovpetro

LIÊN DOANH VIỆT - NGA VIETSOVPETRO

Tran Van Vinh

04 / 04 /2020

TYPICAL ENGINEERING DOCUMENTATION

DOCUMENT TITLE : **SPECIFICATION FOR ELECTRICAL REQUIREMENT FOR PACKAGE EQUIPMENT**

DOCUMENT No. : **VSP-NIPI-TYP-TS-ES2-SP-10**

AGREED:	Name	Date
Capital Construction Department		6/4/20
Material and Equipment Department		29/3/20
Mechanical and Energy Division		17/03/20

CONTROLLED

REV.	DESCRIPTION	DATE	PREPARED	CHECKED	CHIEF DEPART.	ENG. MANAGER	PRO. MANAGER
0	IFA	28/02/2020	P.X.VUONG	T.N.BINH	T.H.TOAI	T.D.HAI	B.T.HAN

Văn bản này được xác thực tại https://office.vietsov.com.vn với số định danh 4328525-15-BPVTLXL

Change Log

REV	SECTION	PAGE	CHANGE DESCRIPTION

Reference Documents

VSP-NIPI-TYP-TS-ES2-SP-08	SPECIFICATION FOR LV MOTORS
VSP-NIPI-TYP-TS-ES2-SP-09	SPECIFICATION FOR ELECTRICAL CABLES
VSP-NIPI-TYP-TS-ES2-SP-11	SPECIFICATION FOR ELECTRICAL BULK MATERIALS
VSP-NIPI-TYP-TS-ES2-SP-13	SPECIFICATION FOR ELECTRICAL HEAT TRACING
VSP-NIPI-TYP-TS-ES2-DS-08	DATASHEET FOR LV MOTORS (TYPICAL)

Văn bản này được cấp cho [illegible] theo đề nghị số [illegible] ngày [illegible]

TABLE OF CONTENTS

1.0	**PURPOSE**	**5**
1.1	Definition of Terms	5
1.2	Abbreviations	5
1.3	Statement of Compliance	6
2.0	**CODES, STANDARDS AND APPLICABLE DOCUMENTS**	**6**
2.1	IEC Standards	6
2.2	Other Standards	7
2.3	Order of Precedence	8
3.0	**ENVIRONMENT CONDITIONS**	**8**
4.0	**TECHNICAL REQUIREMENTS**	**9**
4.1	Operating Conditions	9
4.2	Electrical Characteristics	9
5.0	**DESIGN AND CONSTRUCTION**	**10**
5.1	General	10
5.2	Electric Motor	10
5.3	Motor Starter	10
5.4	Local Control Station	11
5.5	On-Skid Wiring	11
5.5.1	Cable Trays and Ladders	11
5.5.2	Junction Boxes	12
5.5.3	Cabling	12
5.5.4	Cable Colour and Identification	13
5.6	Enclosures	14
5.7	Heaters	15
5.8	Cable Glands	16
5.9	Multi-Cable Transits (MCT)	16
5.10	Lighting	16
5.11	Heat Tracing	17
5.12	Earthing System	17
5.13	Nameplates	18
5.14	External Connections	18
5.15	Painting and Protective Coating	18
6.0	**INSPECTION, TESTING AND CERTIFICATION REQUIREMENTS**	**19**
6.1	General	19
6.2	Inspection and Testing	20
7.0	**SPARE PARTS**	**20**
8.0	**PREPARATION FOR SHIPMENT**	**21**

Vui lòng truy cập http://tieuchuan.vn để tải tiêu chuẩn mới nhất

9.0	GUARANTEE	21
10.0	QUALITY ASSURANCE	21
11.0	CERTIFICATION AND DOCUMENTATION	21
12.0	TECHNICAL ASSISTANCE	23
13.0	TRAINING PROGRAMME AND MAINTENANCE SUPPORT	24

Văn bản này được cấp cho [illegible] theo đề nghị số [illegible] ngày [illegible]

1.0 PURPOSE

This specification defines the minimum requirements for the supply, design, materials, fabrication, inspection, testing, and painting, preparation for shipment and documentation for the Electrical Equipment assembled as part of a mechanical package or instrument package for VSP's project. The VENDOR shall be responsible for all calculations and design to guarantee component construction and system performance in accordance with specifications, codes, standards, data sheets and drawings.

1.1 Definition of Terms

Within this document the following definitions shall apply:

COMPANY	Vietsovpetro Joint Venture
CONTRACTOR	The company or consortium, which is awarded the main EPC Contract for the project
VENDOR	The party that manufactures or supplies equipment and services to perform the duties specified by the CONTRACTOR
SHALL	Indicates a mandatory requirement
SHOULD	Indicates a recommendation

1.2 Abbreviations

The abbreviations (and their definitions) listed below may be used in this document:

AC	Alternating Current
DC	Direct Current
DCS	Distributed Control System
ESD	Emergency Shut Down
FAT	Factory Acceptance Test
HV	High Voltage
IEC	International Electrotechnical Commission
IP	Ingress Protection
I.S.	Intrinsically Safe
LCS	Local Control Station or Remote Control Unit (RCU)
LSZH	Low smoke zero halogen
LV	Low Voltage
MCB	Miniature Circuit Breaker
MCCB	Moulded Case Circuit Breaker
MPR	Motor Protection Relay

Văn bản này được xác thực tại https://eoffice.vietsov.com.vn với số định danh 4328625215BCVXLXL

PTC	Positive Temperature Coefficient
RTU	Remote Terminal Unit
VSDS	Variable Speed Drive System
FGS	Fire and Gas System
SDRL	Supplier Document Requirement List
SMDL	Supplier Master Document List

1.3 Statement of Compliance

VENDOR shall guarantee the equipment complies with this specification and is properly designed, constructed and suitable for the specified requirements.

The equipment shall be tested in the VENDOR's works to prove capability and compliance with this specification. All tolerances shall be in accordance with this specification, and relevant IEC standards.

If the equipment fails to comply with the specification, COMPANY/CONTRACTOR reserves the rights to reject the equipment, or allow the VENDOR to rectify the problem and retest, free of charge to the COMPANY/CONTRACTOR.

The VENDOR shall notify the CONTRACTOR of any apparent conflict between this Specification, Drawings, Datasheets, Codes and Standard, and any other relevant documents. Resolution and/or interpretation precedence shall be obtained from CONTRACTOR in writing before proceeding with design/ manufacture.

All deviations from the requirements of the specifications shall be obtained approval from COMPANY/CONTRACTOR in writing before proceeding with design/ manufacture.

2.0 CODES, STANDARDS AND APPLICABLE DOCUMENTS

The electrical system design shall generally comply with the latest revision and relevant sections of the following regulations, standards and codes of practices.

The applicable international codes and standards are as follows:

IEC International Electrotechnical Commission

ISO International Organization for Standardisation

API American Petroleum Institute

DNV Det Norske Veritas

Note: Unless specifically designated by date, the latest edition of each publication shall be used, together with amendments, supplements or revision thereto.

2.1 IEC Standards

IEC 60050	International electro-technical vocabulary
IEC 60051	Direct acting indicating analogue electrical measuring instruments and their accessories.

Vietsovpetro owns exclusive rights to this document. Any reproduction, distribution, or use without written permission is prohibited.

IEC 60076	Power transformers
IEC 60079	Electrical Apparatus for explosive gas atmosphere
IEC 60228	Conductors of insulated cables
IEC 60269	Low voltage fuses
IEC 60331	Fire resisting characteristics of electric cables
IEC 60332	Tests on electric cables under fire conditions
IEC 60445	Basic and safety principles for man-machine interface, marking and identification
IEC 60446	Basic and Safety Principles for Man-machine interface, marking and identification – Identification of conductors by colour or alphanumerics.
IEC 60529	Degrees of protection provided by enclosures (IP Code)
IEC 60664	Insulation Coordination for equipment within Low-voltage Systems Including Clearances and Creepage Distances for Equipment
IEC 60947	Low voltage switchgear and control gear
IEC 61000	Electromagnetic Compatibility (EMC)
IEC 61439	Low voltage switchgear and controlgear assemblies
IEC 61537	Cable management - Cable tray systems and cable ladder systems
IEC 61892	Mobile and Fixed Offshore Units – Electrical Installations

2.2 Other Standards

DNVGL-OS-D201	Electrical Installation
DNVGL-OS-D301	Fire Protection
DNVGL-OS-A101	Safety Principles and Arrangements
NFPA 70	National Electrical Codes
NEMA MG 1	Motors and Generators
IEEE Std 515	IEEE Standard for the Testing, Design, Installation, and Maintenance of Electrical Resistance Heat Tracing for Industrial Applications
NEMA VE 1	Metallic Cable Tray Systems
NEMA	National Electrical Manufacturers Association
API 505	Recommended Practice for Classification of Locations for Electrical Installations at Petroleum Facilities Classified as Class 1, Zone 0, Zone 1 and Zone 2

The design and engineering of the electrical installation shall satisfy all statutory requirements of the national and/or local authorities.

Văn bản này được xác thực tại https://office.vietsov.com.vn với số định danh 4328625-15-BCVXLXL

The electrical installation shall be suitable for the site conditions.

In the event of contradiction between the requirements of this document, IEC, ISO, or IP, the IEC shall prevail, provided the statutory obligations are satisfied.

2.3 Order of Precedence

Order of precedence in case of conflict between documents shall generally be:

- This Specification
- Reference Project Standards, Data Sheets, Specifications and Drawings
- International Codes and Standards

The above order of precedence is only a general guide, where a conflict and/or discrepancy exist between this specification and the above documents, drawings, codes, and/or standards, it is the responsibility of the VENDOR to bring it to the attention of the COMPANY/CONTRACTOR immediately for decision and disposition of the discrepancy or conflict.

In the event that the VENDOR fails to highlight any discrepancies and/or conflicts, the most stringent requirements shall apply. COMPANY/CONTRACTOR's decision shall be binding on the VENDOR without any additional cost and schedule impact.

3.0 ENVIRONMENT CONDITIONS

All electrical equipment installed outdoors shall be suitable for operation on offshore environment conditions. Electrical equipment installed indoors shall normally be operated in air conditioned environment; however they shall be suitable for continuous and short time duty in the outdoor environmental conditions prevailing at site, without temperature rise of any part of the electrical equipment exceeding the maximum permissible temperature rise values stipulated in the relevant IEC standards. The design environmental and climatic data are summarised below:-

Outdoor

- Atmosphere : Saliferous and Marine
  - Ambient Temperature
    - Maximum : 39°C
    - Minimum : 20.5 °C
    - Average : 27.1 °C
    - Design : 40 °C
  - Relative humidity
    - Maximum : 100 %
    - Minimum : 20 %
    - Average : 80 %

Indoor

- Indoor Ambient Temperature : 24°C ± 2°C (Switchgear & MCC Room with air conditioning)

For all the other relevant environmental data, refer to Process Design Basis of Project

Vật phẩm này được cấp cho [illegible] theo [illegible] Số tài khoản 4328625-15-BPVXLXL

4.0 TECHNICAL REQUIREMENTS

4.1 Operating Conditions

The package electrical equipment shall function without any effect on its reliability under ambient conditions. The package electrical equipment shall be tropicalised.

The equipment shall be suitable for operating in offshore environment, based on the site ambient conditions specified in the data sheets or specification documents. The outdoor atmosphere shall be assumed to be salt-laden, corrosive and humid as commonly encountered in offshore installations.

The environmental conditions and power supply in which the package electrical equipment is operated in is specified in the data sheets. As a generally guide, the environment conditions and climatic data are summarised in clause 3.0.

Where the package is to be installed in a hazardous area, the VENDOR shall ensure that all electrical equipment and installations forming part of the package meet the requirements of IEC 60079. Packaged units to be installed in outdoor non-hazardous areas within process facilities shall be suitable for installation in Zone 2, Gas Group IIA, Temperature Class T3 areas.

Where the VENDOR's standard design does not meet the operating conditions, the VENDOR shall give details of the technical changes and commercial impact of complying with stated conditions.

All components shall be protected for operation in tropical climate i.e. they shall be moisture and fungus proof. All exterior hardware, hinges, etc shall be 316L stainless steel.

4.2 Electrical Characteristics

The distribution voltage for the package electrical equipment shall be specified in Technical Requirement for each package. The electrical system shall be designed based on the following criteria:

a) Under steady state condition:

- nominal system voltage : ±5%
- nominal system frequency : ± 2%

b) Voltage dip during large motor starting as per the following :

- Voltage dip at Switchgear/MCC bus : 15%
- Motor terminal for HV motors (DOL) : 20%
- Motor terminal for LV motors (DOL) : 20%

Voltage transient due to load variation tolerance shall be ±20% from nominal voltage as per IEC 61892-1.

If other voltages are required, transformation and conversion equipment shall be furnished with the package electrical equipment.

Equipment and loads shall be designed to operate at the following voltage levels (Refer to Technical requirement for final voltage levels):

- For motor loads 200kW and below : 380V, 50Hz, 3 phase
- For motor control (from starter) : 220V, 50Hz, 1 phase

Vật phẩm này được cấp bởi https://officevietsov.com với số tài khoản 4328625-15-BPVTLXL

- For lighting loads : 220V, 50Hz, 1 phase
- For general service receptacles and motor anti-condensation heater : 220V, 50Hz, 1 phase
- For package unit control panels (critical loads): 220-230V UPS, 50Hz, 1 phase

5.0 DESIGN AND CONSTRUCTION

5.1 General

The design of package electrical equipment shall incorporate safeguards and protective devices to ensure safe operation of the packaged equipment with regard to personnel as well as equipment.

Packaged equipment shall be supplied with the electrical equipment and components factory installed. VENDOR's field cabling shall terminate directly on the electrical equipment, local control panel or junction boxes on the skid.

In case the packaged equipment itself contains possible sources of hazardous vapours, it shall be VENDOR's responsibility to determine the location, the nature and the extent of the classified areas in accordance with IEC 60079.

VENDOR shall provide an itemized list of flame-proof material used, including classification, VENDOR, certifying agent and certificate number. The certifying agent must be an approved certifying agent as listed in IEC 60079.

Where an air pressurization system form part of the equipment, all provisions for personnel entry and exit together with interlocks, alarms and protection systems shall be subject to approval by COMPANY/CONTRACTOR. Air purged/ pressurized electrical equipment shall only be used if approved by COMPANY/CONTRACTOR.

The package electrical equipment shall be designed for an expected lifetime of twenty five (25) years. All equipment and components shall be tropicalized.

The equipment shall be located such that it can easily be maintained in its service position.

5.2 Electric Motor

Motors shall be supplied in accordance with Specification for LV Motors respectively

In general, electric motors shall have an ingress protection of IP 56 as minimum for outdoor installation and IP44 as minimum for indoor installation. For submersible motors, ingress protection of IP 68 shall be met.

Motor rating greater than 25 kW shall be equipped with anti-condensation heater. VSDS driven LV motors should be considered to provide with PTC thermistors for protection against overheating. Embedded RTD sensors PT 100 shall be provided for motors that are driven by variable frequency drives (VFDs).

5.3 Motor Starter

All motor starters will be located in motor control center or switchboards provided by COMPANY/CONTRACTOR, unless otherwise specified.

Cables from motor starters shall be connected directly to motors, anti-condensation heaters, local control station (LCS) and safety switches located in the packaged equipment unit. LCS's shall be located opposite side of the motor to the main terminal box.

Văn bản này được cấp cho [illegible] theo [illegible] với số tài khoản 4328657-15-BPVXLXL

For VSDS controlled motors, safety switches shall be employed for local isolation of motor feeder from upstream VSD.

A heater ON/OFF safety switch shall be employed for motors space heater circuit which is powered from starter and interlocked so that heater shall be isolated when motor start, and installed adjacent to the motor's LCS.

All LV motor starters shall have MCCB instead of switch / fuse incomers and shall equip with intelligent motor protection relays. For LV motors which are rated equal or larger than 15% source capacity, electronic soft-starters/start-delta starter shall be used.

5.4 Local Control Station

LCS's shall be of push button switch type. Push button type LCS with running indicating light shall be provided for all electric motors.

LCS installed in hazardous area shall have minimum explosion protection category suitable for Zone 2, Gas Group IIA, Temperature Class T3. The enclosure installed outdoor shall be either 316L stainless steel or LM6 material with minimum ingress protection of IP56. The LCS installed indoor shall have IP44 as minimum.

Glass-fiber reinforced polyester (GRP) may be used as alternative LCS enclosures (but they shall not be installed where they are exposed to direct sunlight).

An ammeter shall be provided on LCS for motor rated ≥ 30 kW.

Local/Off/Remote switch, Start/Stop push buttons, Indication lamps shall be provided on LCS.

LCS's and any other auxiliary control equipment for the package unit shall be provided by the CONTRACTOR.

5.5 On-Skid Wiring

5.5.1 Cable Trays and Ladders

Interconnecting cables between any skid-mounted equipment shall be supported on cable ladders or cable trays that are fixed to the skid (not clamped). Cable ladders/trays shall be installed such as not to obstruct access for operation and maintenance, access to junction boxes, etc.

Cable ladders/trays from skid edge to cable destination shall be provided.

Cable ladders/trays and fittings shall be made of heavy duty 316 stainless steel. The working (allowable) load capacity shall be Class C to NEMA VE 1. Fasteners and hardware for connector plates and fittings shall be 316 stainless steel.

Maximum side rail height shall be 150mm for ladders and 50mm for trays. Maximum rung spacing for ladders/trays shall be 300mm.

Supports for cable ladders/trays shall be painted or galvanized carbon steel. In order to avoid galvanic corrosion, insulation pads shall be inserted between cable ladder and support bracket. Cables shall be fixed to ladders/trays using nylon sheathed stainless steel cable tie wraps.

Cable trays/ladders shall be bonded to the skid earth.

Cable tray/ladders covers shall be provided where:

- Mechanical damage to the cables are likely to occur during construction, operations or maintenance.
- Oil or chemical spillage can be expected.

Văn bản này được cấp cho [illegible] theo [illegible] với số tài khoản 4328625-15-BPVXL

- Sun shielding against direct solar radiation.

Separate racking/ tray work shall be installed for the following electrical systems:

- HV power
- LV power and control cables for non-instrument control (i.e. control stations)
- Instrument cables

The racking/ tray work shall be sized to carry cables from the skid edge, where connected directly to the packaged equipment, as well as the package own cables.

5.5.2 Junction Boxes

Junction boxes for outdoor installation in hazardous area shall have minimum explosion category suitable for Zone 2, Gas Group IIA, Temperature Class T3 and minimum ingress protection of IP 56. Enclosure shall be made of electro-polished 316Lstainless steel or aluminum alloy LM6. The cover shall be fitted with neoprene gasket/seal and captive stainless steel screws. Earth stud shall be provided.

Indoor junction boxes may be made of high impact resistant, flame retardant glass reinforced polyester (GRP) and suitably certified junction boxes for hazardous area in which it is located with internal ground continuity plate. Indoor junction boxes shall have IP44 as minimum.

All cable entries to the junction boxes shall be from the bottom except for lighting junction boxes where side entries are acceptable.

Terminals shall be rail mounted Klippon type or approved equal.

Junction boxes shall be grouped together at skid's edge and shall be installed at sufficient height to allow bottom entry of cables.

5.5.3 Cabling

Cable shall comply with Specification for Electrical Cables and shall be designed based on the following criteria:

- In general application, multi-core cable shall be EPR/TCWB/LSZH, flame retardant and with an oxygen index of not less than 30, temperature index of not less than 260°C and type tested in accordance with IEC 60332-3 Category A (reduced propagation) and acidic emission of max. 17% (by weight) in accordance with IEC 60754.
- Cable running for critical services or exposed to high risk areas shall be mica glass type (MGT) primary insulation, EPR insulated, fire resistant in accordance with IEC 60331, withstand with temperature of 750°C for three hours, low smoke zero halogen (LSZH), flame retardant in accordance with IEC 60332-3 category A (reduced propagation).
- VFD motor feeder shall be 3-core cables with three symmetrical ground conductors; single core cables shall not be used for VFD application.

The minimum size of power and control cables shall be 2.5 mm² and 1.5 mm² respectively.

Individual conductors shall be identified at both ends by means of ferrules of insulation material, marked in accordance with the associated wiring diagrams. Compression type wire pins shall be used.

Insulated conductors shall be mounted directly to metal, but shall be kept in position by means of insulated tubes, channels cleats or plastic strips.

Văn bản này được tải từ https://officevietsov.com với số tính năng 4338525-BEVXL

VENDOR shall be responsible for cable volt-drop, rating, installation connection and mechanical protection of all cables in this scope.

Cables entering equipment which may be removed or replaced for maintenance shall have its cable looped prior to entry. Wiring shall be continuous without joints/splices.

5.5.4 Cable Colour and Identification

The cables outer sheath colour shall be as follows:

Low voltage cables	-	BLACK
High voltage cables	-	RED
Fire Resistant cables	-	ORANGE
Earthing cables	-	Striped GREEN/YELLOW

The identification colour for AC power cables insulation shall be as follows:

Outer Sheath	-	see details above
Single Conductor	-	BLACK
Twin Conductors	-	BROWN (L) and BLUE (N)
Three Conductors	-	BROWN (L1), BLACK (L2) and GREY (L3)
Three Conductors + PE with	-	BROWN (L1), BLACK (L2), GREY (L3) and GREEN YELLOW stripe
Four Conductors	-	BROWN (L1), BLACK (L2), GREY (L3) and BLUE (N)
Four Conductors + PE	-	BROWN (L1), BLACK (L2), GREY (L3), BLUE (N) and GREEN with YELLOW stripe

The identification colour for DC power cables insulation shall be as follows:

Outer Sheath	-	see details above
Positive Conductor	-	BROWN (+ve)
Negative Conductors	-	GREY (-ve)

The identification colour for control cables insulation shall be as follows:

Outer sheath	-	see details above
Conductors	-	BLACK with white numeral markings for core identification.

The identification colour for the Instrumentation cables outer sheath shall be as follow:

IS cable :	-	(Light) Blue
Non-IS:	-	other color from Blue

The identification colour for multi pair control cable insulation shall be as follows:

Outer sheath	-	see details above
Conductor	-	Single pair: White/Black

Văn bản này được cấp cho [illegible] theo [illegible] vsp.com.vn với số tài khoản 43286573-BPVXLXL

- Multi pair: White/Black (the pairs shall be identified numerically and sequentially).

The identification colour for multi triad cable insulation shall be as follows:

Outer sheath - See details above

Conductor
- Single triad: White/Black/Red
- Multi triad: White/Black/Red (the triads shall be identified numerically and sequentially).

5.6 Enclosures

All junction boxes, local control panels etc. to be installed in an outdoor environment shall have a degree of protection of IP 56 minimum, certified for the area classification (see Section 4). Ingress Protection for switch-rack assembly enclosure shall also be min. IP56. All enclosures shall be made of electro-polished 316L stainless steel, otherwise specified.

All motor enclosures shall have a minimum ingress protection of IP 56 for outdoor, min IP 44 for indoor without air conditioner.

The degree of ingress protection for electrical equipment to be installed indoor shall be minimum IP44 and IP22 (for air conditioning room), unless otherwise specified in the relevant design drawing or datasheets.

All enclosures specified for outdoors shall, in addition to the above requirements, be designed to shed rain water and prevent the accumulation of standing water on any part of the enclosure. An Ex-certified breather/drain device shall be installed in each outdoor enclosure.

Internal cooling of enclosures shall be by natural air circulation.

Enclosure (or box) that is used to house battery banks shall be design in compliance to IEC 60079-7. Ventilation opening for the battery enclosure shall provide sufficient ventilation such that the hydrogen concentration in the battery box/enclosure during type test does not exceed 2% by volume as per IEC 60079-7.

All internal surface of the battery box/enclosure, when of metallic material shall be completely lined with an insulating layer. Internal surfaces shall not be adversely affected by the action of the electrolyte. VENDOR shall submit the type test certificates for the battery box/enclosure confirming that the proposed battery box/enclosure is suitable and design to house the batteries.

Enclosure for relay boxes, control stations, or other similar equipment shall be 316L stainless steel or LM6 to provide a lasting rigid structure. Control panels shall be made of material suitable for its hazardous area utilisation and shall be of at least 1.5mm in thickness. Cover doors shall be hinged gasket and pad lockable. Control enclosures over 1.2 metres in height shall have three point latching mechanisms. Wall mounted equipment shall be provided with external fixing lugs.

Control panels should be located indoors where possible, however, where an outdoor location is specified, a suitable weather shelter shall be provided in addition to the requirements specified above.

Separate junction boxes, terminal boxes, terminals, cable duct and wiring/cabling routes shall be provided for AC and DC circuits.

Văn bản này được cấp cho [illegible] theo [illegible] Không in hoặc sao chép khi chưa được phép

Each terminal shall be clearly and permanently numbered on the body of the terminal itself. Terminals shall be of the non-loosening type.

Not more than one conductor will be connected per terminal. If more than one conductor has to be terminated at the same point, VENDOR shall provide the required number of terminals linked together. The link shall not occupy the same place as the conductor.

Terminal blocks shall be arranged and positioned to enable easy access for cable terminations, testing, inspection and maintenance. Sufficient terminals shall be provided to terminate all the spare cores of multicore cables. Each terminal block shall be provided with a minimum of 25% spare terminals.

Within enclosures, separately mounted and screened terminal blocks/ strips shall be provided for each voltage level. Terminals for 3 phase supplies shall be phase segregated by installation of barriers.

All live terminals and components shall be shrouded or protected by phase barrier to a degree of at least IP20 so as to prevent inadvertent contact with personal when doors are open.

Separate gland plates for VENDOR cable, compatible with the appropriate standards and Hazardous Area Certification shall be provided. The gland plates shall be removable and undrilled.

Site drilling for cable entry of certified Ex'd' terminal boxes are not allowed. All Ex'd' enclosure shall be pre-drilled (according to CONTRACTOR's cable entry size) and certified at the VENDOR's Works.

Certified plugs shall be used to blank off all unused entries in certified Ex'e' and Ex'd' equipment and similar certified adaptors shall be used to match metric glands to non-metric entries.

The junction boxes provided shall be adequately rated and sized to accept the current carrying capacity of the external cabling. Terminals shall either be of the pressure clamp or bolted lug type. Pinch screw terminals where the screw bores directly onto the conductor are not acceptable. Space shall be provided for 20% additional spare terminals.

Control panels shall be equipped with internal lighting and door switches when required or where specified.

Gaskets shall be of a rot-proof material i.e. neoprene or synthetic rubber, with resistance to splitting.

Floor standing enclosures shall be provided with facilities to enable them to be bolted to the floor or structure and be suitable for top lifting. Eyebolts, lifting frames or other suitable means of lifting shall be provided.

All control panels shall be provided with a document pocket, securely fixed to the inside of the door, to hold relevant drawings etc.

5.7 Heaters

If required, control panels shall be fitted with anti-condensation heaters. Heating power shall be calculated for the equipment/ panel heat dissipating surface area with consideration given to the site ambient conditions.

Anti-condensation heaters shall be automatically controlled via an integrated thermostat. The heater shall operate at 220-230V AC, 50Hz (Refer to Technical requirement for final voltage levels).

Vật bản này thuộc sở hữu của Vietsovpetro. Mọi sao chép, sử dụng phải có sự đồng ý của Vietsovpetro

The heaters shall be separately protected and switched for isolation purposes by means of a miniature circuit breaker.

5.8 Cable Glands

Cable glands shall be selected to suit the type of cable and termination box/enclosure, and shall be of the appropriate type of protection, e.g. Ex'd', Ex'e'. Effective earth continuity shall be ensured between the cable braid and the gland plate or the internal earth terminal.

Nickel plated brass compression glands with an armour-clamping feature with inner and outer seals providing minimum ingress protection of IP 56, ISO metric threads, complete with locknut and earth tags shall be provided.

All steel braided armoured cable entries into equipment shall be made by means of suitable brass double compression cable glands. Barrier glands shall be used if the cables are not of the effectively filled type.

5.9 Multi-Cable Transits (MCT)

MCTs shall be used for cable penetration into package's enclosures. If necessary, cable penetration through acoustic hoods, etc. shall also be via MCT.

External cables shall enter the package enclosure at the skid edge via MCTs, certified for Zone 1, Gas Group IIA, Temperature Class T3. The MCTs shall provide a gas tight seal.

MCT shall be suitable for marine rated, fire rating to 1 hour A60 rated and complete with frame, wedge, stay plates, RM modules and RM spare modules.

A minimum of 30% spare ways within the MCT shall be provided complete with filler blocks.

MCT frames shall be completely filled prior to shipment, unfilled spaces which require additional cables to be installed elsewhere shall be filled with temporary blank blocks and sealed before leaving the VENDOR's works.

VENDOR shall ensure that non-magnetic frames and stay plates are used in transits containing single core cables.

5.10 Lighting

On-skid lighting for walkways, sight-glasses, instrument read-out and local control panels shall be provided by the VENDOR/ CONTRACTOR.

Areas shall generally be illuminated with fluorescent lighting fixtures or high-pressure sodium lighting fixtures suitable for the hazardous area classification in which they will be installed. For installations in outdoor process areas, lighting fixtures suitable for Zone 1 or Zone 2, Gas Group IIA, Temperature Class T3 hazardous area (where required) with minimum ingress protection of IP 56 shall be used. In order to maintain commonality, lighting fixtures offered in equipment packages shall be identical to those used by platform fabricator.

In general, materials of luminaires shall be as follows:

- For outdoor locations or in enclosed space without air conditioning, housings of luminaires shall be of either marine grade SS316, Marine grade Aluminum/ Aluminum alloy material. Suitable for zone 1 or zone 2 application (where required).
- For indoor locations with air-conditioning, fluorescent luminaire housings shall be made of painted/powder coated steel, glass reinforced polyester (GRP).

Vật phẩm này được cấp bởi [illegible] tại https://officevietsov.com với số tài khoản 4328625715 BPVXL

- Recessed luminaires fixed to ceiling in living quarters shall be certified with minimum B15 fire rating to be compatible with the ceiling installation.

The lighting circuits shall terminate in a junction box at skid's edge for connection to lighting distribution system or connected directly to the local control panel on the skid.

Emergency/escape lighting shall be provided within the package equipment in areas where it is necessary to operate controls, valves or switchgear to allow safe shutdown of the package or facility. Emergency/escape lighting shall be provided with integral 90 minutes battery backed power supply.

5.11 Heat Tracing

Heat tracing requirement on package equipment shall be furnished by the package vendor.

The electrical heat tracing system shall be designed based on self-regulating / self limiting heating cables and according to IEEE std 515.

Design and installation of the package Vendor's furnished heat tracing installation shall comply with Specification for Electrical Heat Tracing.

Electrical power to the package heat tracing circuits shall be derived from platform distribution panel.

5.12 Earthing System

All electrical equipment on the package unit shall be bonded to the package unit skid. Earthing system with common earth dispatcher and cables, termination and busbars within the package shall be the VENDOR's responsibility.

Where driven equipment, vessels, tanks, instruments etc. comprising part of a package is directly welded to the skid, no additional earth connection is required.

High voltage equipment and equipment mounted on anti-vibration mounts, or similarly insulated, shall be provided with two earth studs located diametrically opposite each other. These shall be earthed to the skid with suitably sized earthing cable.

The Instrument I.S. earth and Instrument clean earth shall have earthing system separate from other power equipment.

The earthing conductors shall be in accordance wih IEC 61892-6.

Earth connections shall be made with crimped type connectors. Mechanical fixing points shall not be used for connecting earth conductor.

At least two earthing bosses bolted diagonally opposite, suitable for the connection of a 70 mm2 cable shall be provided for the purpose of connecting the package unit to the main earth system. The bosses shall be of a similar material to the skid base, tapped M10 and filet welded to the package. VENDOR shall ensure electrical continuity of all metal components in the package with the skid earthing boss.

Earthing and bonding conductors shall be single core, stranded annealed copper conductors with a striped yellow/green outer sheath.

The position of all earthing connections shall be visible and easily accessible. Earthing points shall be protected against corrosion and designed to ensure that effective electrical and mechanical connections can be made.

Where non-metallic enclosures are used, means shall be provided to preserve the electrical continuity of the braid and/ or metallic sheaths of cables.

Văn bản này được cấp cho [illegible] theo [illegible] với số tài khoản 4328657-15-BPVXL

5.13 Nameplates

All control panels, motors, relay boxes, terminal boxes, field control stations, etc. shall be fitted with nameplates indicating tag (equipment) number and function. In addition, control stations and similar equipment will also carry normal operating function labels i.e. 'stop', 'start', 'on', 'off' etc.Labels shall be fixed by 316L stainless steel self-tapping screws. Labels fixed by adhesives are not acceptable.

For certified equipment, the labels shall be tag number only fixed on the equipment using an epoxy adhesive, with tag and service labels affixed adjacent to the equipment. The means of attachment shall ensure that it does not affect the certification or IP rating of the enclosure.

All internally mounted components in panels e.g. relays, terminal strips, switches etc. shall be labelled adjacent to the components, with references as detailed on VENDOR/ VENDOR's schematic and wiring diagrams.

All withdrawable type units shall be identified in both the fixed and withdrawable parts.

Inscriptions shall be in English language and warning labels and all electrical safety related signage's shall be inEnglish. Nameplates shall be white-black-white laminated plastic, in which the characters shall be black on white background. Warning notice plates shall be red on white background.

The following information shall be clearly marked on the name/rating plate attached to the permanent part of the enclosure:

- Equipment tag number.
- Purchase Order number.
- Year of manufacture.
- VENDOR name.
- Voltage.
- Frequency.
- Full load ampere.
- Net weight.
- Space heater voltage and rating.

5.14 External Connections

All outgoing electrical connections from the packaged unit shall be grouped and wired to interface junction boxes. The boxes shall be supplied and shall be mounted in an accessible position.

For motor equipped with anti-condensation heaters, the supply will be interlocked with the motor contactor to ensure that when the motor contactor is open, the heater is energized.

All terminals shall be easily identifiable.

5.15 Painting and Protective Coating

Painting and protective coating for electrical components and supports shall be in accordance to the latest revision of the Project Painting & Coating Specification or

Vật liệu này được cấp quyền bởi https://officevietsov.com với số tài khoản 43286525HBCVXLXL

VENDOR's standard specification approved by COMPANY/CONTRACTOR (if there is not Painting & Coating Specification in the project).

The treatment and protection of metalwork shall include cleaning, degreasing, rust resisting primers and paint finishes that provide effective protection against corrosion under the functional and climatic conditions.

A careful inspection shall be made to ensure all operating instructions and label plates are in place, legible and have not been obscured during the painting process.

Painting damaged during transit shall be repaired by the VENDOR. The VENDOR shall supply paint, matching the colour used, for field touch-up purpose.

6.0 INSPECTION, TESTING AND CERTIFICATION REQUIREMENTS

6.1 General

COMPANY/CONTRACTOR or its representative shall have free access to the plants of VENDOR and his Sub-VENDOR's during fabrication, assembly, and testing of the equipment. Inspection visit shall be coordinated thru VENDOR's Project Manager.

Prior to shipment, the VENDOR shall carry out the required Factory Acceptance Tests (FAT) in the presence of COMPANY/CONTRACTOR engineers or their appointed representatives.

COMPANY/CONTRACTOR may require additional testing if test results are unsatisfactory or marginal at no additional cost to the COMPANY/CONTRACTOR. Any equipment rejected shall be repaired or replaced to COMPANY/CONTRACTOR's satisfaction and test shall be repeated at VENDOR's cost.

COMPANY/CONTRACTOR shall be given the opportunity to inspect VENDOR's manufacturing facilities including Sub-VENDOR's facilities to confirm that satisfactory quality assurance (Q.A) and production procedures are being implemented. VENDOR shall make available all relevant Q.A. procedures for review.

All rights of COMPANY/CONTRACTOR in respect of Inspection and Testing shall also, upon COMPANY/CONTRACTOR's request, be extended to any and all third parties authorised by COMPANY.

VENDOR shall furnish, immediately on award of order, the names of:

a) The Works Manager and his assistants to whom contact should be made for inspection of the equipment.

b) The Office Engineer and his assistants to whom contact should be made for technical queries, and manufacturing and expediting progress.

During construction of the Equipment, VENDOR shall establish and maintain an inspection and quality control program to ensure adherence to the applicable codes and this specification.

Any unsatisfactory material, equipment, installation, or workmanship shall be replaced or repaired to COMPANY/CONTRACTOR's satisfaction at VENDOR's cost.

All pre-requisites for test such as temporary interconnections, test instruments, etc. as well as the actual conduct and documentation of tests shall be the responsibility of VENDOR.

The VENDOR shall inform COMPANY/CONTRACTOR as part of the bid, if any of the specified tests cannot be performed. In the absence of such a statement, it shall be understood that all requirements of this specification are fulfilled without exception.

Văn bản này được tải từ https://officevietsov.com với số tính năng 4328625-15HBCVXLXL

6.2 Inspection and Testing

The following are typical examples of the tests required and are offered for the VENDOR/ VENDOR's guidance:

a) Test all cables (insulation resistance and continuity) after the cables have been glanded to the equipment with the cores isolated.

b) Megger motor windings and transformer windings for grounds and moisture accumulation. Where evidence of moisture accumulation is found, the equipment shall be dried out and re-tested before operation.

c) Check circuit breakers, switches, relays and other equipment for loose connections (both mechanical and electrical) to see that contacts and working parts are correctly aligned and free from dust and foreign matter.

d) Check motors for proper rotation, lubrication and proper alignment.

e) Perform operational tests on all motor control circuits.

f) Perform operational tests on all miscellaneous control switches, alarm and shutdown devices, indicating lights and meters for proper operation.

g) Function test all control panels.

Earthing tests (both continuity and impedance) shall be carried out and results recorded.

Certificates of Test shall be provided for each item of electrical apparatus to prove that it has been satisfactorily tested to meet all requirements of its appropriate manufacturing standards, whether or not witnessed by the COMPANY/CONTRACTOR. Where appropriate, test certificates shall state values for all test results.

VENDOR shall be responsible to carry out all inspection and tests as required at the VENDOR's Works.

The overall responsibility for entire system inspection rests with the VENDOR. However, COMPANY/CONTRACTOR and COMPANY/CONTRACTOR's inspection representative, reserve the right to inspect the packages at any time during manufacture to ensure that materials and workmanship are in accordance with the requirements of the packages datasheets, drawings, the applicable codes and other associated standards. Inspection by COMPANY/CONTRACTOR or its representatives will in no way relieve the VENDOR of any of his responsibilities for ensuring that the equipment meets all the requirements of this specification.

7.0 SPARE PARTS

The VENDOR shall include in their scope of supply the spares required for pre-commissioning, commissioning and start-up as required. A list of pre-commissioning, commissioning and start-up spares considered for each package shall be submitted to COMPANY/CONTRACTOR for review.

A recommended spare parts list for two (2) years of operation shall also be submitted for CONTRACTOR's review and purchase separately.

Recommended spares shall take into account related factors of equipment reliability, costs of parts and availability of equipment service facilities.

All spare parts furnished by the VENDOR shall be wrapped and packed to preserve items as new condition under normal storage anticipated in tropical climates. The same parts shall be properly tagged by stainless steel tags and coded so that later identification as to their intended usage will be facilitated.

Văn bản này được cấp cho [illegible] theo [illegible] với số tính danh 4328625-15-BPVXLXL

All items supplied shall be packaged separately and clearly marked as 'Spare Parts' and shipped with the equipment. Packing lists shall be furnished complete and in detail so that parts can be handled without un-crating, if desired.

VENDOR shall provide adequate and all commissioning and start-up spares including all VENDOR recommended spares.

8.0 PREPARATION FOR SHIPMENT

The VENDOR shall be responsible for preparation of the equipment for export shipment and completion of all required preservation for storage in tropical climates for a maximum period of 12 months.

A careful inspection shall be made to ensure that all operating instructions and label plates are in place, legible and have not been obscured during painting operations. Each item shall be clearly identified with the VENDOR's name, address, Purchase Order and tag number.

The shipping crates shall be constructed of wood and suitably packed to protect all items against damage during the shipment and storage. Miscellaneous shall be tagged or marked with the tag item number for which they are intended. All such parts shall be suitably boxed, firmly attached to the main item and shipped with the unit.

Protection shall be provided against atmospheric corrosion while in transit and while in outdoor storage. All exposed machined surfaces shall be protected with an easily removable rust preventative compound.

The contents of all boxes or packages shall be recorded in detail on the packing list. The transported package shall have the necessary fastenings, protections and lifting facilities to satisfy lifting and sea fastening loads and restraints. Two complete set of the installation, operating and maintenance instructions shall be packed and shipped with the unit.

9.0 GUARANTEE

The VENDOR shall guarantee all equipment furnished to be in compliance with this specification and drawings.

The VENDOR shall guarantee all the equipment against defective material, design, damage or non-conformity and/ or workmanship.

10.0 QUALITY ASSURANCE

The VENDOR and his Sub-VENDOR shall operate a quality system satisfying the latest ISO 9001 Quality Standards, or agreed equivalent standard, commensurate with the goods and services provided.

The VENDOR shall demonstrate evidence of Quality Assurance in all aspects of the VENDOR's current design and manufacturing practices. Quality Control procedures covering all aspects of design, manufacturing, inspection and test relevant to the equipment shall be included in accordance to the requirements of CONTRACTOR/COMPANY.

11.0 CERTIFICATION AND DOCUMENTATION

The VENDOR documentation requirements together with the required quantities are given on the SDRL forms. As a minimum, VENDOR is responsible to provide documentations as

Văn bản này được cấp cho [illegible] theo [illegible] số [illegible] ngày [illegible]

defined in this specification. VENDOR is responsible for all documentation in strict accordance with the requirements of the specifications.

CONTRACTOR/COMPANY reserves the right to request additional drawings and documents or copies of drawings and documents to verify Purchase Order compliance without cost variation.

VENDOR shall identify the planned and actual submissions to CONTRACTOR/ COMPANY on their master drawing and document schedules i.e. computerized VENDOR Master Document List (SMDL). The responsibility of updating the SMDL shall rest with VENDOR.

The VENDOR shall furnish soft copies of drawings/documents that are of suitable first generation quality. Drawings that are, in COMPANY/CONTRACTOR's opinion, not of suitable quality will be returned to the VENDOR for resubmission.

Approval of drawings/documents by the CONTRACTOR/COMPANY shall in no way relieve the VENDOR responsibility for the correctness of information, their conformance with stated requirements or acceptability of equipment and materials. This responsibility rests solely with the VENDOR.

The VENDOR shall allow the CONTRACTOR/COMPANY five (05) working days to review and respond to the VENDOR's submission of documentation. The fifteen working days is defined as from time of receipt by the CONTRACTOR/COMPANY to the time of despatch. VENDOR shall allow this review period in his production schedule. However work shall proceed without delay in the event of late return of the documentation by the CONTRACTOR/COMPANY.

A review status will be assigned by the CONTRACTOR/COMPANY to documents submitted by the VENDOR for review or approval. The following review status codes will be used:

Code 1: Approved

Code 2: Approved with comments

Code 3: Document is rejected, to be resubmitted before proceeding

Code 4: For information only

Within 10 working days of receipt of a marked-up document, the VENDOR shall issue a revised document incorporating all comments and other specified details not included in the first issue. The CONTRACTOR/COMPANY will review documents and return with any further comments. If documents are revised, all sheets under cover of one project document number shall have a new revision number and be resubmitted. The document must be complete even if the revision is minor. All such resubmissions (irrespective of the number of times) are part of the VENDOR 's Lump Sum Price.

All documents furnished by the VENDOR shall have a revision code following the document number. For specifications, technical reports and other written material, the following shall apply: Changes in one official issue from the last shall be clearly indicated by a vertical line in the right hand margin adjacent to the current change and in addition the revision number code is to be indicated within a triangle. All changes from the last previous issue shall be thus indicated. Changes to drawings are to be shown in a similar fashion by "clouding in" the change and placing the revision code in a triangle inside the "cloud".

Within 2 weeks after delivery of Equipment/Materials, 1 copy of Final Factory As Built Documentation (draft set) shall be transmitted to CONTRACTOR/COMPANY for review. The required number of sets of Final Documentation shall be submitted after the draft set is accepted. Replacements of any Final Factory As-Built documentation with onshore or offshore as-built as a result of changes is part of VENDOR's Lump Sum Price.

Văn bản này được tải từ https://officevietsov.com với số tài khoản 4328657-15-BPVTLXL

VENDOR shall submit as a minimum the following information:

- Type test certificates (copies) issued by a recognized testing agency shall be supplied for the cables tray/ ladders and the other equipment/materials (where applicable or according to requirements of certifying agencies)
- Type approval certificates (copies) issued by recognized certifying agencies (BV,DNV-GL, ABS, UL, Lloyd,...) for cables tray/ ladders and the other equipment/materials (where applicable or according to requirements of certifying agencies).
- VENDOR/ VENDOR's final technical offer, technical clarifications and brochures
- Purchase Order
- Equipment data sheet
- Detailed wiring and schematic diagrams
- Outline and General arrangement drawings including weight and floor cut-out drawing
- Interfacing connection diagram
- Electrical single line diagram
- List of electrical consumers with estimated loads
- Inspection and Test Plan
- Factory Acceptance Test Procedures
- Factory Acceptance Test Report
- List of pre-commissioning, commissioning and start up spares
- List of spare parts for 2 years operation
- Operation, maintenance and commissioning manual
- VENDOR/ VENDOR Data Book (Binding containing all drawings, documents and certificates)

FAT document format and requirements shall be compliedwith the requirements of CONTRACTOR/COMPANY.

VENDOR shall at all times, maintain at the VENDOR works/site office and update to current status a master set of red lined as-built drawings as work progresses. This set of master red lined drawings shall not be removed from the VENDOR's works/site office. COMPANY/CONTRACTOR reserves the rights to inspect and review this set of master red lined as-built drawings. If VENDOR needs a set of drawings for field installation, a separate set with "Field Use Only" stamped on every page of the drawings shall be used.

12.0 TECHNICAL ASSISTANCE

If required, VENDOR shall provide technical assistance and support at the integration yard jobsite (onshore fabrication yard) and at site (offshore platform) to successfully complete the work. As a minimum, the VENDOR technical assistance is required for equipment installation, pre-commissioning, commissioning, offshore hook-up, site acceptance test and training (if applicable).

VENDOR shall provide procedures and checklist for equipment pre-commissioning and commissioning including parameters for performance acceptance test.

Văn bản này được xác thực tại https://eoffice.vietsov.com.vn với số định danh 4328625215HBCVXLXL

VENDOR to quote rates including mobilization/ demobilization, daily rates and response time for onshore fabrication yard and offshore platform technical assistance/support during Bid.

For offshore assistance, the VENDOR personnel shall possess a valid medical and sea survival training certificate.

13.0 TRAINING PROGRAMME AND MAINTENANCE SUPPORT

If required, training program shall be provided by VENDOR to COMPANY.

The rates contained in VENDOR proposal for site support and training services shall be issued to and available/transferable to COMPANY for a period up to 12 months after final acceptance.

Văn bản này được cấp cho [illegible] theo số đăng ký [illegible]

RESEARCH AND ENGINEERING INSTITUTE FOR OFFSHORE OIL AND GAS

PROJECT NAME : BK-10A WELLHEAD PLATFORM

DOCUMENT TITLE : GENERAL INSTRUMENT SPECIFICATION

DOCUMENT NO. : BK1.BK10.BK10A-001-GE-IA2-SP-003

PHASE : DE

Applied Document	VSP-NIPI-TYP-TS-IA2-SP-03	Rev.	1

REV.	DES.	DATE	PREP	CHK.	DPT.MGR
			Signed by: Lê Thị Hằng Date: 20/06/2025 10:27:36 Certified by: Vietsovpetro CA CONTROLLED	Signed by: Гайнутдинов Евгений Нурлыгалиевич Date: 20.06.2025 13:44:52 Certified by: Vietsovpetro CA	Signed by: Авдеев Андрей Сергеевич Date: 21.06.2025 12:28:39 Certified by: Vietsovpetro CA
			DC LÊ THỊ HẰNG	ENG.MGR GAYNUTDINOV E.N.	PRO.MGR AVDEEV A.S.
0	IFA		Signed by: Панов Александр Анатольевич Date: 20.06.2025 09:54:54 Certified by: Vietsovpetro CA		Signed by: Исатов Дмитрий Олегович Date: 20.06.2025 10:19:17 Certified by: Vietsovpetro CA
			PREP TIKHONOV A.N.	CHK. TIKHONOV A.N.	DPT.MGR ISATOV D.O.

Văn bản này được xác thực tại https://eoffice.vietsov.com.vn với số định danh: 334/25-CV-TDH/NIPI

TRACK CHANGES

No	Rev.	Content of Change	Note
1	0	Issue For Approval	

Văn bản này được xác thực tại https://eoffice.vietsov.com.vn với số định danh: 334/25-CV-TDH/NIPI

TABLE OF CONTENT

1 INTRODUCTION 4

2 ADDENDUM 5

Văn bản này được xác thực tại https://eoffice.vietsov.com.vn với số định danh: 334/25-CV-TDH/NIPI

1 INTRODUCTION

BK-10A Wellhead Platform belongs to Vietsovpetro JV. It will be located in Block 09-1, White Tiger oil field, offshore the Socialist Republic of Vietnam.

BK-10A is connected with BK-10 by a linking bridge. BK-10A is an unmanned platform with 12 slots (03 spare slots) and will be remotely controlled from the host platform BK-10 via fiber optic cable.

There will be 09 production wells on BK-10A (02 wells will be converted into water injection wells in future as planned) and 03 wells can be added in the future.

Based on the criterion of the need for production and maximizing the return on investment, BK-10A will be considered to have the minimum facilities. The full well stream of BK-10A will be gathered together with the produced fluid of BK-10 and BK-1, preliminarily separated on BK-10 and then transferred to CPP-2.

The scope of this project is detailed engineering design for the BK-10A Wellhead Platform, Linking Bridge and modification of BK-10.

Location of BK-10A and related platforms as below.

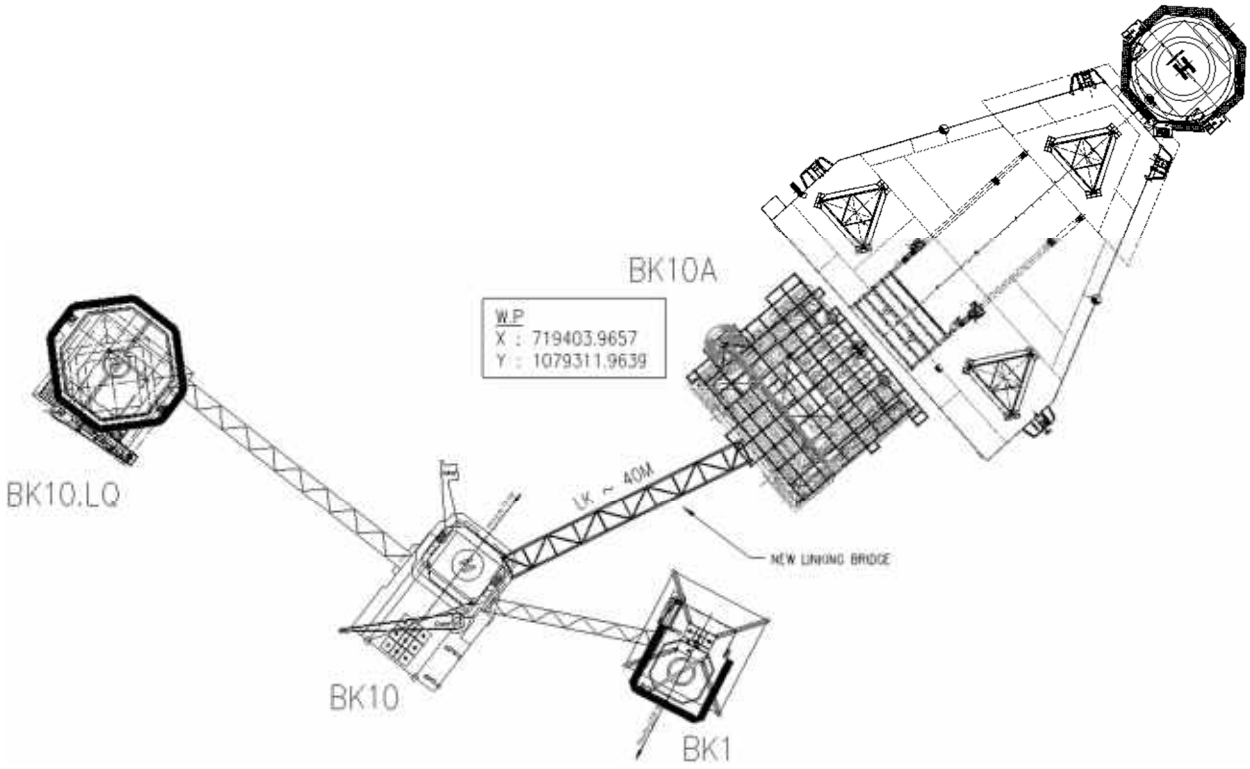

Figure 1: Location of the BK-10A Wellhead Platform and related platforms.

Văn bản này được xác thực tại https://eoffice.vietsov.com.vn với số định danh: 334/25-CV-TDH/NIPI

2 ADDENDUM

This document uses the Typical Engineering Documentation for this Project. However, some design intends or requirements may require to be revised to fit with Project's purpose. This section lists changes in the applied typical documents, originating in Typical Engineering Documentation for any reason including those indicated in Table 1. These changes are identified in this Addendum to the applied typical document, identifying the document and section affected and the required change.

VENDOR shall review the required changes in conjunction with the referenced document and project's engineering documents.

The type of modification shall be defined and indicated in subsequent text as follows:

- "ADD" - Indicates the following statement(s) is/are added to the Company referenced text.
- "DELETE" - Indicates the following statement(s) is/are deleted from the Company referenced text.
- "REPLACE WITH" - Indicates the following statement(s) is/are revision(s) to the Company referenced text.

Table – 1: List of changes

Section	Current Statement or Requirement	Revised to
Reference Documents	VSP-NIPI-TYP-TS-IA2-SP-01 ICSS Functional Design Specification VSP-NIPI-TYP-TS-IA2-SP-05 Specification for Control Valves VSP-NIPI-TYP-TS-IA2-SP-04 Specification for Shutdown, Blowdown Valve and Hand Valve with Limit Switch	REPLACED WITH: BK1.BK10.BK10A-001-GE-IA2-SP-01 ICSS Functional Design Specification BK1.BK10.BK10A-001-GE-IA2-SP-05 Specification for Control Valves BK1.BK10.BK10A-001-GE-IA2-SP-04 Specification for Shutdown, Blowdown Valve and Hand Valve with Limit Switch
3.5.2 Protective Coatings	VSP-NIPI-TYP-GEN-AZ7-SP-01 Painting Specification for Platform VSP-NIPI-TYP -GEN-AZ7-SCH-01 Basic Painting Schedules	REPLACED WITH: BK1.BK10.BK10A-001-GE-AZ7-SP-01 Technical Specification for Painting
4.1.2 Actuated Valves	VSP-NIPI-TYP-TS-IA2-SP-04 Specification for Shutdown, Blowdown Valve and Hand Valve with Limit Switch	REPLACED WITH: BK1.BK10.BK10A-001-GE-IA2-SP-04 Specification for Shutdown, Blowdown Valve and Hand Valve with Limit Switch
4.1.3 Control Valves	VSP-NIPI-TYP-TS-IA2-SP-05 Specification for Control Valves	REPLACED WITH: BK1.BK10.BK10A-001-GE-IA2-SP-05 Specification for Control Valves

Văn bản này được xác thực tại https://eoffice.vietsov.com.vn với số định danh: 334/25-CV-TDH/NIPI

RESEARCH AND ENGINEERING INSTITUTE FOR OFFSHORE OIL AND GAS

AGREED BY
Deputy General Director of Vietsovpetro

Tran Xuan Hoang

23 / 08 /2022

APPROVED BY
Chief Engineer of Vietsovpetro

Tran Van Vinh

24/08/2022

TYPICAL ENGINEERING DOCUMENTATION

DOCUMENT TITLE GENERAL INSTRUMENT SPECIFICATION

DOCUMENT NO. : VSP-NIPI-TYP-TS-IA2-SP-03

AGREED:	Name	Date
Capital Construction Department	Signed by: Nguyễn Hồng Giang Date: 22/08/2022 07:26:14 Certified by: Vietsovpetro CA	
Material and Equipment Department	Signed by: Châu Ngọc Hồ Date: 19/08/2022 11:20:28 Certified by: Vietsovpetro CA	
Mechanical Electrical Division	Signed by: Trịnh Hoàng Linh Date: 19/08/2022 08:07:21 Certified by: Vietsovpetro CA	

CONTROLLED

Signed by: Đỗ Quốc Huy Date: 16/08/2022 14:10:03 Certified by: Vietsovpetro CA
Signed by: Trần Anh Nguyên Date: 16/08/2022 14:43:44 Certified by: Vietsovpetro CA
Signed by: Nguyễn hải Chung Date: 16/08/2022 15:00:38 Certified by: Vietsovpetro CA
Signed by: Гайнутдинов Евгений Нурлыгалиевич Date: 16/08/2022 15:07:26 Certified by: Vietsovpetro CA
Signed by: Trần Duy Hải Date: 16/08/2022 15:23:19 Certified by: Vietsovpetro CA
Signed by: Bùi Trọng Hân Date: 16/08/2022 22:13:55 Certified by: Vietsovpetro CA

REV.	DES.	DATE	PREPARED	CHECKED	DEPART. MANAGER	ENG. MANAGER	PRO. MANAGER
1	IFA	15/07/2022	T.A.NGUYEN /D.Q.HUY	N.H.CHUNG	G.E.N	T.D.HAI	B.T.HAN
0	IFA	25/10/2019	N.H.CHUNG	N.H.CHUNG	G.E.N	T.D.HAI	B.T.HAN

Văn bản này được xác thực tại https://eoffice.vietsov.com.vn với số định danh: 334/25-CV-TDH/NIPI

CHANGE LOG

REV	SECTION	PAGE	CHANGE DESCRIPTION
1	3.6	11	REVISED: ~~DNVGL-OS-D201~~ DNV-OS-D201
1	4.1	13	REVISED: ~~½"~~ 1/4" NPT-F minimum
1	5.2.1	15	REVISED: Thermowells shall have ~~DN40~~ DN50 RF flange process connections ~~(DN50 RF for vessel connection)~~.
1	5.7	19	REVISED: in ~~API MPMS Chap. 5.6 and~~ ISO 10790 Output signal shall be Modbus interface and optional 4-20mA with local indicator ~~(HART type is preferred)~~.
1	5.8	20	REVISED: ~~The Ultrasonic flow measurement shall be according to AGA Report No. 9~~. In order to meet the ~~MPFM~~ performances, Output signal shall be Modbus interface ~~and~~ or 4-20mA
1	5	20, 21	ADDED: Section 5.9 Rotameter Section 5.10 Turbine Meter Section 5.11 Water Cut Meter Section 5.12 Pig Signaller
1	6.4	23	REVISED: Smoke detectors installed within the Battery Room shall be suitable for Class 1 Zone 1 Group IIC T3, ~~and shall be certified SIL2 rated as minimum~~.
1	6.7	24	REVISED: ~~All Emergency pushbutton shall be certified SIL2 rated as minimum.~~
1	6.8	24,25	ADDED: Section 6.8 Open Path Flammable Gas Detector Section 6.9 Sounder Section 6.10 Beacon
1	7.1	26	REVISED: Cross section for copper conductors shall be as follows: • Power cables (i.e. for solenoids, lamps, 24VDC interface signals, etc.): ~~2.5~~ 1.5 mm² minimum • Control cables (i.e. for transmitters, positioners, limit switches): ~~1.5~~ 1.0 mm² minimum
1	8.1	28	ADDED: Section 8.1.2 FRP Cable Tray

Văn bản này được xác thực tại https://eoffice.vietsov.com.vn với số định danh: 334/25-CV-TDH/NIPI

REFERENCE DOCUMENTS

Number of document	Description
VSP-NIPI-TYP-TS-IA2-SP-01	ICSS - Functional Design Specification
VSP-NIPI-TYP-TS-IA2-SP-05	Specification for Control Valves
VSP-NIPI-TYP-TS-IA2-SP-04	Specification for Shutdown, Blowdown Valve and Hand Valve with Limit Switch

Văn bản này được xác thực tại https://eoffice.vietsov.com.vn với số định danh: 334/25-CV-TDH/NIPI

TABLE OF CONTENTS

1. INTRODUCTION 6
1.1 Purpose of document 6
1.2 Definition of Terms 6
1.3 Abbreviations 6
2. REFERENCES, CODES & STANDARDS 7
2.1 General 7
2.2 International Codes & Standards 8
3. ENGINEERING DESIGN DATA 9
3.1 Environmental conditions 9
3.2 Design Life 10
3.3 Utilities 10
3.4 Units of Measurement 10
3.5 Weather Protection 11
3.6 Hazardous Area Classification 11
3.7 Earthing 12
3.8 Material Requirements 12
3.9 Nameplates 12
4. GENERAL REQUIREMENT FOR CONTROL AND ACTUATED VALVES 13
4.1 General Requirements 13
4.2 Actuated Valves 13
4.3 Control Valves 13
5. GENERAL REQUIREMENT FOR PROCESS INSTRUMENTS 13
5.1 Pressure Instruments 13
5.2 Temperature Instruments 15
5.3 Level Instruments 16
5.4 Flow Meter Assembly 18
5.5 Orifice Plates 18
5.6 Restriction Orifice Plates 19
5.7 Coriolis Flow Meter 19
5.8 Ultrasonic Flowmeters 20
5.9 Rotameter 20
5.10 Turbine Meter 20
5.11 Water cut meter 21
5.12 Pig Signaller 21
6. GENERAL REQUIREMENT FOR FIRE AND GAS DEVICES 21
6.1 Point Gas Detector 21
6.2 Hydrogen Gas Detectors 22
6.3 Flame detector 22
6.4 Smoke Detector 23
6.5 Heat detectors 23
6.6 Manual Call Point Pushbuttons 24
6.7 Emergency Push Button 24
6.8 Open Path Flammable Gas Detector 24
6.9 Sounder 25
6.10 Beacon 25
7. GENERAL REQUIREMENT FOR INSTRUMENTATION CABLES 25
7.1 General 25
7.2 Instrument Cables for non-essential service 27
7.3 Instrument Cables for essential service 27
7.4 Communication Cable 27
8. GENERAL REQUIREMENT FOR BULK MATERIALS 28

Văn bản này được xác thực tại https://eoffice.vietsov.com.vn với số định danh: 334/25-CV-TDH/NIPI

8.1 CABLE TRAY 28
8.2 MULTI CABLE TRANSIT 29
8.3 CABLE ACCESSORIES 29
8.4 INSTRUMENT JUNCTION BOXES 30
8.5 TUBING AND FITTINGS 31

9. DOCUMENTATION 31

9.1 GENERAL 31
9.2 INSTRUMENT INDEX 31
9.3 INSTRUMENT DATA SHEETS 31
9.4 INSTRUMENT CALCULATIONS 32
9.5 INSTRUMENT TAGGING 32

10. CONFLICTS AND ORDER OF PRECEDENCE 32

11. QUALITY ASSURANCE, INSPECTION AND TESTING 32

11.1 QUALITY ASSURANCE 32
11.2 INSPECTION AND TESTING 32

12. SPARE PARTS AND SPECIAL TOOLS 32

12.1 GENERAL 32
12.2 COMMISSIONING SPARES 32
12.3 OPERATIONAL SPARES 33
12.4 SPECIAL TOOLS 33

13. WARRANTY AND PERFORMANCE GUARANTEE 33

14. PREPARATION FOR SHIPMENT 33

Văn bản này được xác thực tại https://eoffice.vietsov.com.vn với số định danh: 334/25-CV-TDH/NIPI

1. INTRODUCTION

The typical engineering documentation is a set of engineering documents issued by Research and Engineering Institute (REI) that can be applied repeatly to many projects that REI involves.

The typical engineering documentation shall be agreed by related departments in Vietsovpetro and approved by Vietsovpetro, if any.

1.1 Purpose of document

This document defines the minimum requirements for design, materials, fabrication, inspection, testing, painting, preparation for shipment, and documentation for the supply of instruments and field devices.

1.2 Definition of Terms

Within this document the following definitions shall apply:

COMPANY	The party which initiates the project and ultimately pays for its design and construction and owns the facilities. Here the COMPANY is Vietsovpetro JV (referred to as VSP).
CONTRACTOR	The party which carries out all or part of the design, engineering, procurement, construction and commissioning of the project.
VENDOR	The party which the order or contract of supply of the equipment/package or services is placed.
Shall	Refers to mandatory requirement
Should	Refers to a recommendation

1.3 Abbreviations

API	American Petroleum Institute
APS	Abandon Platform Shutdown
CCR	Central Control Room
CPP	Central Processing Platform
ESD	Emergency Shutdown System
F&G	Fire and Gas
FAT	Factory Acceptance test
FC	Fail Close
FL	Fail Lock
FO	Fail Open
FGS	Fire & Gas System
HC	Hydrocarbon
HSE	Health, Safety, and Environment
HMI	Human Machine Interface
HVAC	Heating Ventilation and Air Conditioning
IOM	Installation, Operation, and Maintenance
ITP	Inspection and Test Plan
I/O	Input/Output
ICS	Integrated Control System
ICSS	Integrated Control & Safety System
IEC	International Electrotechnical Commission
IR	Infra-red
IS	Intrinsically Safe

Văn bản này được xác thực tại https://eoffice.vietsov.com.vn với số định danh: 334/25-CV-TDH/NIPI

ISA	The International Society of Automation
JB	Junction Box
LCD	Liquid Crystal Display
LCP	Local Control Panel
LED	Light Emitting Diode
MODBUS	Serial Communication Protocol by Modicon
MTTR	Mean Time To Recovery
MTBF	Mean Time Between Failure
NC	Normally Close
NO	Normally Open
NDE	Non Destructive Examination
NPS	Nominal Pipe Size
OS&Y	Outside Screw and Yoke
P&ID	Piping and Instrument Diagram
PAPA	Prepare to Abandon Platform
PCB	Polychlorobiphenyls
PCS	Process control system
PVC	Polyvinylchloride
PO	Purchase Order
PLC	Programmable Logic Controller
QA/QC	Quality Assurance / Quality Control
RFI	Radio Frequency Interference
RO	Restriction orifice
RTJ	Ring Type Joint
RF	Raised Face
SAT	Site Acceptance Test
SIL	Safety Integrity Level
SIS	Safety Integrated System
SOE	Sequence of Events
SWB	Steel Wire Braid
SPIR	Spare Parts and Interchange ability Record
TFE	Tetrafluoroethylene
TPI	Third Party Inspection
UCP	Unit Control Panel
UPS	Un-interruptible Power Supply
VDU	Video Display Unit
VDRL	Vendor Data Requirements List

2. REFERENCES, CODES & STANDARDS

2.1 General

All equipment shall comply with the relevant national and international codes, standards and recommendations. The Vendor shall determine what equipment requires type approval by the local Vietnamese Authority and shall provide type approval equipment where necessary. This specification requires that the design, construction and testing of the instrument shall meet all requirements of the codes, standards and other documents listed in Section 2.2.

In general, the Instrumentation and Control systems shall be designed to conform with, but not limited to the latest editions of the following industry standards, codes, professional documents, regulations and project documents.

Văn bản này được xác thực tại https://eoffice.vietsov.com.vn với số định danh: 334/25-CV-TDH/NIPI

2.2 International Codes & Standards

API MPMS	API Manual of Petroleum Measurement Standards (for turbine meter, auto sampling, etc)
API RP-14C	Recommended Practice for Analysis, Design, Installation and Testing of Basic Surface Safety Systems for Offshore Production Platforms
API RP-14FZ	Recommended Practice for Design, Installation and Maintenance of Electrical Systems for Fixed and Floating Offshore Petroleum Facilities for Unclassified and Class 1, Zone 0, Zone 1 and Zone 2 Locations
API RP 14G	Recommended Practice for Fire Prevention and Control on Open Type Offshore Production Platforms.
API RP 14J	Recommended Practice for Design and Hazards Analysis for Offshore production facilities.
API RP 2218	Fireproofing Practices in Petroleum and Petrochemical Processing Plants
API RP-505	Recommended Practice for Classification of Locations for Electrical Installations at Petroleum Facilities Classified as Class I, Zone 0, and Zone 2
API RP 540	Electrical Installations in Petroleum Processing Plant
API RP 550	Manual on Installation of Refinery Instruments and Control Systems
API RP-551	Process Measurement Instrumentation
API RP-552	Transmission System
API RP 554 (3 parts)	Process Instrumentation and Control
API RP-555	Process Analyzers
API RP 581	Risk Based Inspection Base Resource Document
ASME B16.5	Pipe Flanges and Flanged Fittings: NPS 1/2 through NPS 24 Metric/Inch Standard
ASME 19.3	Performance Test Code, Part 3: Instruments and Apparatus Temperature Measurement
ASTM A269	Standard Specification for Seamless and Welded Austenitic Stainless Steel Tubing for General Service
BS 6739	Code of Practice for instrumentation in process control system : Installation design and practice
DNVGL-OS-A101	Safety Principles and Arrangements
DNVGL-OS-D201	Electrical Installations
DNVGL-OS-D202	Instrumentation and Telecommunication Systems
DNVGL-OS-D301	Fire Protection
DNVGL-OS-E201	Oil and Gas Processing Systems
DNVGL-RP-E402	Recommendation for selecting standards for electrical and instrumentation components (tentative recommended practice)
EN 54-2	Fire Alarm Control Panel
IEC 60079-1 to 14	Electrical apparatus for explosive gas atmospheres
IEC 60092 (all parts)	Electrical installation in Ship
IEC 60331	Tests for Electric Cables under Fire Conditions
IEC 60332	Tests on Electric and Optical Fiber Cables under Fire Conditions
IEC 60381	Analogue Signals for Process Control Systems.
IEC 60529	Degrees of Protection Provided by Enclosures (IP Code)
IEC 60534	Industrial Process Control Valves
IEC 60896	Stationary lead Acid Batteries
IEC 61000	Electromagnetic Compatibility (EMC)
IEC 61131	Programmable Controllers
IEC 61499	Functional Blocks
IEC 61508	Functional Safety of Electrical/Electronic/Programmable Electronic Safety-related Systems

Văn bản này được xác thực tại https://eoffice.vietsov.com.vn với số định danh: 334/25-CV-TDH/NIPI

IEC 61511	Functional Safety - Safety Instrumented Systems for the Process Industry Sector
IEC 61882	Hazard and Operability Studies (HAZOP Studies)
IEC 61892 series	Mobile and fixed offshore units - Electrical installations
IEC 62040	Uninterruptible Power Supply
IEC 62086	Electrical apparatus for explosive gas atmospheres - Electrical resistance trace heating
IEC 61537	Cable tray systems and cable ladder systems for cable management
IEE (1992)	Recommendations for electrical and electronic equipment of mobile and fixed offshore installations
IEEE Std 1242	Guide for Specifying and Selecting Cable for Petrochemical Plants.
ISA 5.1	Instrumentation Symbols Identification
ISA 5.3	Graphic Symbols for Distributed Control/Shared Display Instrumentation, Logic, and Computer Systems
ISA 5.4	Instrument Loop Diagrams
ISA 5.5	Graphic Symbols for Process Displays
ISA 12.13.01	Performance Requirement for Combustible Gas Detectors
ISA 12.21.01	Use of Fiber Optic Systems in Class 1 Hazardous (Classified) Locations
ISA 12.13.01	Performance Requirements for Combustible Gas Detectors.
ISA 12.13.02	Installation, Operation, and Maintenance of Combustible Gas Detection Instruments
ISA 20	Specification Forms for Process Measurement and Control Instruments, Primary Elements, and Control Valves
ISA RP 60 Series	Control Center
ISA S71	Environmental Conditions for Process Measurement and Control Systems
ISA 75 Series	Control Valve Standards & User Resources
ISA 84.01	Application of Safety Instrumented Systems for the Process Industries.
ISA TR 84 Series	Safety Instrumented Functions (SIF)-Safety Integrity Level (SIL) Evaluation Techniques
ISA RP 92.0.02	Installation, Operation, and Maintenance of Toxic Gas - Detection Instruments: Hydrogen Sulfide.
ISA 92.0.01	Part I Performance Requirements for Hydrogen Sulfide Detection Instruments.
ISO 2715	Liquid hydrocarbons – Volumetric measurement by turbine meter system
ISO 3170	Petroleum liquids – Manual sampling
ISO 3171	Petroleum liquid – Automatic pipeline sampling
ISO 10790	Measurement of fluid flow in closed conduits -- Guidance to the selection, installation and use of Coriolis flowmeters (mass flow, density and volume flow measurements)
NEMA ICS 1	General Requirements for Industrial Control
NEMA ICS 2	Industrial Control Devices, Controllers and Assemblies
NEMA ICS 6	Enclosures for Industrial Control Systems
NEMA PE-1	Uninterruptible Power Supply – Specification and Verification
NFPA 1	Fire Protection Code.
NFPA 70	National Electrical Code ® (NEC)
NFPA 72	National Fire Alarm Code
IP 15	Area Classification Code for Installations

3. ENGINEERING DESIGN DATA

3.1 Environmental conditions

All Instrument and Control equipment shall be suitable for operation on offshore platform. The equipment shall be suitable for continuous and short time duty, in the environmental conditions prevailing at site.

The environmental and climatic data are summarized below:

Văn bản này được xác thực tại https://eoffice.vietsov.com.vn với số định danh: 334/25-CV-TDH/NIPI

Atmosphere:	Offshore, salt laden, marine air condition, expose to monsoon storm and winter depression
Ambient Temperature:	39°C (Max) 21°C (Min)
Relative Humidity:	98% (max) 62% (min)
Wind Velocity:	18.8 m/s
Rainfall:	50 mm/hr
Seismic:	5 Richter

Indoor Air-conditioner conditions:

Instruments located in indoor equipment rooms, which will normally be air-conditioned (AC) environments.

These areas shall be subject to the following conditions:

- Ambient Air Temperature: 21 - 24 °C
- Relative Humidity: 45 - 55%

The equipment shall be able to operate correctly under conditions of air-conditioning failure, when the ambient conditions may rise to 50°C and 100% RH.

3.2 Design Life

All new equipment shall be designed for a service life of 15 years and shall have minimum 2 years proven in used in offshore environment condition.

3.3 Utilities

The facilities will be equipped instrument air system which shall meet requirements of ISA-7.0.01 "Quality Standard for Instrument Air" in general as followed.

The instrument air shall be free from oil and other liquids, and from toxic, corrosive, flammable and obnoxious gases or vapors.

The pressure dew point as measured at the dryer outlet shall be at least 10°C below the minimum temperature to which any part of the instrument air system is exposed. The pressure dew point shall not exceed 4°C at line pressure.

The quantity of solids shall be less than 0.1 g/m3 and the diameter of the particles shall not be more than 40 micrometer particle size in the instrument air system is acceptable for a majority of pneumatic devices.

The lubricant content should be as close to zero as possible and under no circumstances shall it exceed one ppm w/w or v/v.

- Design Instrument Air pressure : 12 barg
- Normal Instrument Air pressure : 5~7 barg
- Max./ Min. Instrument Air pressure : 8 / 4 barg

Electrical Power: Power supply to Instrument and Control systems shall be as follows:

- 220 VAC, 50 Hz, 1-phase, unearthed, UPS
- 220 VAC, 50 Hz, 1-phase, Non-UPS, solidly earthed
- 380 VAC, 50 Hz, 3-phase

24 VDC power supplies, if required, shall be derived from the respective power supply unit within the systems.

Note 1: For UPS backup time definition, reference shall be made to "BK21-002-TS-ES2-DB-01_Electrical Design Basis".

3.4 Units of Measurement

Văn bản này được xác thực tại https://eoffice.vietsov.com.vn với số định danh: 334/25-CV-TDH/NIPI

Unless otherwise stated, units of measurement shall in general be in accordance with the International System of Units (SI Units), IS0 80000-1.

3.5 Weather Protection

3.5.1 Ingress Protection

Ingress protection for instruments / equipment shall be in accordance with IEC 60529 and as follows:

- Minimum IP 56 for outdoor installations
- Minimum IP 44 for installations inside enclosed rooms without air-conditioner
- Minimum IP 22 for installations inside enclosed rooms with air-conditioner

3.5.2 Painting

All field instruments housing of carbon steel, frame works and supports shall be painted to suit the environmental condition. The detailed requirements for painting will be stated in:

VSP-NIPI-TYP-GEN-AZ7-SP-01	Painting Specification for Platform
VSP-NIPI-TYP -GEN-AZ7-SCH-01	Basic Painting Schedules

Stainless steel instruments/equipment shall not be painted.

3.5.3 Tropicalization

All field mounted electrical/electronic instruments/equipment shall be tropicalized in accordance with manufacturer's standard procedure. All electronic printed circuit boards shall be conformal coated or equal, to protect against humidity, corrosion and heat (i.e. tropical ambience).

3.6 Hazardous Area Classification

Hazardous areas shall be classified according to API RP 505, and equipment specified accordingly.

All equipment for use in hazardous areas shall be certified by reputable bodies such as ATEX, PTB, CENELEC, BASEEFA, FM, UL, CSA...

Sensors and actuating devices outside rooms shall be certified for operation in a Class 1, Zone 2 Group IIA T3 hazardous areas as minimum, except all detector devices located in the hazardous area shall be certified for use in Class 1, Zone 1, Group IIA T3 hazardous areas. Unless otherwise stated, the minimum ingress protection of outdoor instruments and devices shall be IP56 as minimum as per DNV-OS-D201 and IEC 60529. 1

For reasons of standardization, unless otherwise stated, all field mounted electrical equipment used for instrumentation circuits shall utilize the methods of EEx'd' protection and be certified for the hazardous area. Two following cases should be considered:

- Junction boxes for Non-Intrinsically Safe Circuits–Explosion proof/flameproof Ex 'e' if comply with API RP14F, otherwise Ex'd' shall be required
- Cable Gland – Explosion proof/flameproof Ex 'd'.

If specialist instrumentation cannot be provided with the above methods of protection, then alternative methods suitable for the classified area and certified by an acceptable Authority may be proposed The Vendor shall submit a technical report justifying the instrument selection for the Purchaser's consideration.

Cables that necessarily are located so they may come into contact with mud are to be constructed of materials resistant to oil based mud to comply with DNV-OS-D201. 1

The Vendor shall provide a dossier of all hazardous area equipment, containing all information pertinent to the hazardous area work. The dossier shall include all necessary certificates, drawings, calculations, catalogue information, data and specification sheets etc.

All instrument equipment to be installed in a hazardous area meets all the relevant requirements of the ATEX Directive and shall have the CE symbol clearly fixed to indicate compliance.

Văn bản này được xác thực tại https://eoffice.vietsov.com.vn với số định danh: 334/25-CV-TDH/NIPI

If they meet other requirement of UL, CSA (North America)..., the (UL); (CSA) or relevant symbols shall be provided to indicate compliance.

3.7 Earthing

There are 2 type of earth in platform:

- Instrument Earth: Instrument termination; earth bar... shall be connected to.
- Protective Earth: Instrument housing, enclosure shall be connected to.

All panels, junction boxes, frames, etc. shall be equipped with 10 mm diameter earth studs and all metal work shall be earth bonded. All outdoor equipment shall have external earth studs.

All Instrument signal cable screens shall be earthed at one point only. This shall be at the equipment panels. All screens shall be continued through junction boxes and insulated from earth at the field side.

Cable armors shall be earthed at both ends with continuity through junction boxes.

All electronics field instrument housings shall be separately grounded by connecting the external studs to the platform ground.

For Offshore all the earth points converge to a single earthing boss, however the safety and Instrument earths will remain segregated at the enclosure end.

Earthing cables used shall be stranded Cu and EPR insulated, 600/1000 Volt grade and shall have green / yellow colored outer sheaths.

3.8 Material Requirements

Materials shall be selected with regard to the following criteria:

Suitability for the specified process conditions, with 316SS as the minimum for use outside fully enclosed rooms.

Suitability for the corrosive effects of the atmosphere.

Galvanic compatibility between dissimilar materials, with isolating bushes, plates, used where necessary to prevent corrosion due to galvanic action.

The possibility of selective corrosion in certain alloys and stress corrosion cracking in certain high strength materials when used in corrosive environments.

Purchaser approval shall be obtained for the use of aluminum for any instrument component. Aluminum may only be used if no other suitable material is available from the manufacturer and shall not be used for any component in contact with the process fluid. If aluminum is used for any housing or component it shall be suitably coated and certified as copper free i.e. less than 0.4% copper by mass.

Material for all Ex'e' junction boxes, and instrument electronics and termination housings shall be 316SS.

All proposed plastic components shall be toxic free and fire resistant, UV resistant, and compatible with the environmental conditions.

All bolting, screws etc, shall be manufactured from a suitable grade of stainless steel.

All brackets, fittings etc shall be fabricated from 316SS.

3.9 Nameplates

Each item shall be equipped with a manufacturer's nameplate of 316SS permanently attached with stainless steel screws or rivets indicating the specified data referred to under the particular Instrument Specification in addition to the following as a minimum:

- Instrument Tag No.
- Purchase Order No.
- Name of Manufacturer.
- Place of Manufacture.
- Type and Model No. (including reference to any special features).
- Serial No.

Văn bản này được xác thực tại https://eoffice.vietsov.com.vn với số định danh: 334/25-CV-TDH/NIPI

All information displayed on nameplates shall be in the English Language, in Metric units, and approved by the Purchaser.

The Vendor shall install an engraved traffolyte label (black on white), screwed to the instrument mounting, stating the instrument tag number.

4. GENERAL REQUIREMENT FOR CONTROL AND ACTUATED VALVES

4.1 General Requirements

Terminations within wiring enclosures shall be via fixed terminals. Flying leads shall not be used.

Pneumatic connections shall be 1/4" NPT-F minimum. Larger port sizes shall be used where required for larger sizes of actuators.

Accessory mounting bolts shall be 316SS. 1

Flow direction shall be stamped or cast on the body of all valves.

All actuators, positioners, air sets, air lock relays, limit switches, solenoid valves, etc., shall be shipped factory mounted, tubed and wired, in a completely assembled condition. Tubing shall be seamless 316SS tube 3/8" OD minimum with 316SS double ferrule compression fittings.

The Vendor shall provide detailed Pressure-Temperature envelope curves for each combination of valve body, trim and elastomer materials.

Each control and actuated valve shall have a 316SS nameplate attached firmly to the body, furnishing the following information:

- Tag number.
- Body and port size.
- Stem travel.
- Action on air failure.
- Spring range.
- Air supply pressure.
- Manufacturer's model number for valve body, actuator and positioner.
- P.O. number.
- Serial number.
- Leakage class.
- Body rating and material grade.
- Signal range.
- Trim characteristics.
- Body test pressure.
- Bench set pressure.

4.2 Actuated Valves

Refer to document No.: "VSP-NIPI-TYP-TS-IA2-SP-04 Specification for Shutdown, Blowdown Valve and Hand Valve with Limit Switch".

4.3 Control Valves

Refer to document No.: "VSP-NIPI-TYP-TS-IA2-SP-05 Specification for Control Valves".

5. GENERAL REQUIREMENT FOR PROCESS INSTRUMENTS

5.1 Pressure Instruments

Văn bản này được xác thực tại https://eoffice.vietsov.com.vn với số định danh: 334/25-CV-TDH/NIPI

5.1.1 General

Materials for process wetted parts of instruments and accessories shall comply with the project piping specification. The minimum requirement is 316SS for all wetted parts.

In addition to the process isolation valve, pressure instruments shall be provided with close-coupled manifolds providing facilities for isolation of each impulse line, equalization, bleeding and testing DP gauges and switches shall be provided with manifolds, DP transmitters (except DP level transmitters with filled-leg or diaphragm seal) shall be provided with manifolds.

Pressure instruments shall be mounted such that they may be easily removed and adjusted without deforming impulse lines.

All pressure instruments shall be mounted so as to minimize the length of impulse lines.

The use of over-range protector shall be advised by Vendor. Over-range protectors shall not be applied without the written permission of the Purchaser.

5.1.2 Pressure Gauges

Gauge scales shall be direct reading linear in Bar or kPa.

Dials shall have a diameter of 100mm or 160mm for all measurement readings and 63mm for filter regulators or other pneumatic instrument.

Gauges shall withstand 130% of the maximum full range pressure without affecting their calibration.

Pulsation dampeners or snubbers shall be supplied for instruments in pulsating service, such as reciprocating pump and compressor suction and discharge.

Gauges shall be of solid front 316SS construction, with a screwed retaining ring, weather-proof design, equipped with rear blowout disc and zero adjustment. Gauge lenses shall be shatterproof glass or acrylic plastic.

Accuracy shall be within 1% of the scale range. Accuracy within 1.6% of the scale range can be accepted for Difference Pressure Gauge.

Gauge connections shall be ½" NPT-M bottom except for receiver gauges, which may have ½" NPT-M back connection.

Pressure gauges shall be liquid filled as standard, using fluids as listed below:

Pressure Span	Filling	Temp. Range
Spans 243 kPa Minimum	Glycerine 98 %	-10° to 66°C
Spans 60 kPa Minimum	Silicone	-40° to 100°C
Up to 0.61 kPa Maximum	No Filling	N/A

Gauge ranges shall be selected such that the normal operating pressure will read between approximately 1/3 and 2/3 full scale.

5.1.3 Pressure Switches

Pressure switches shall be diaphragm or piston type with hermetically sealed single pole double throw (SPDT) micro-switch rated 1 Amp 24 VDC minimum.

Piston type switches shall have a process isolation diaphragm made of "TFE" or similarly inert material, and may only be applied on utility service.

Pressure switches shall have tamper-proof set point adjustment.

Pressure switch dead band shall be less than the difference between the normal operating pressure and set point.

Pressure switches shall not be used for ESD functions without Purchaser approval.

Set point shall be not less than 50% of the range and shall be adjustable without violating the flameproof integrity of the switch enclosure. A separate cover shall give set point adjustment access.

The switch element shall withstand an over-range pressure of 1.3 times maximum range without loss of calibration.

Electrical connection shall be ½" NPT.

Văn bản này được xác thực tại https://eoffice.vietsov.com.vn với số định danh: 334/25-CV-TDH/NIPI

Enclosure material shall be SS316.

Repeatability shall be ± 1.0% with fixed dead-band.

Process connection shall be bottom entry, 316SS threaded 1/2" NPT-F.

Pressure switches shall have provision for surface mounting by body lugs or flange.

5.1.4 Pressure and Differential Pressure Transmitters

All pressure transmitters shall use Coplanar type arrangement process connections. All transmitters shall be supplied with Integral Manifold assembly.

Output signals shall be 4-20mA with HART.

Electrical connection shall be ½" NPT.

Transmitters shall include an LCD indicator scaled in engineering units, and shall be mounted integrally in the head of the detecting element where access permits, otherwise remotely mounted. Where the transmitter is not readily visible a separate loop-powered indicator shall be provided.

Transmitters shall be able to withstand an overpressure equal to the body rating.

Span shall be continuously adjustable over the transmitter range.

Transmitters shall have 50% over-range protection and body studs shall be high tensile stainless steel, or other corrosion-resistant material for higher stress levels.

Accuracy shall be within 0.25% of the scale range.

Transmitters shall be constructed of material suitable for the process fluid, 316SS minimum.

Bolting shall be 316SS with 1/2" NPT process connection.

5.1.5 Mounting

Mountings shall be 316SS bracket type suitable for mounting on a 2" pipe stand and/ or flat steel plate.

Nuts, bolts and washers shall be 316SS or better. Where switches and other devices are grouped and mounted on a gauge board, or instrument stand, adjustment or removal of each instrument shall be possible without the need to disconnect, dismantle or remove any other instruments or equipment or deform any tubing.

5.2 Temperature Instruments

5.2.1 Thermowells

Temperature elements installed on process lines or vessels shall be installed in thermowells.

Thermowells shall have DN50 RF flange process connections. Sensor connections to thermowells shall be 1/2" NPT. Stainless steel thermowell flanges shall be rated as the same class of pipe which it is connected.

1

Screwed thermowells may be used on utilities with specific Purchaser approval, and shall be fabricated from drilled and threaded bar stock, with 1"NPT (male) and ½" NPT (female) threads.

Thermowell pressure/temperature ratings shall be in accordance with ASME B16.5 (latest edition).

Thermowell material shall be suitable for the process media, generally 316SS, or other material as required by the project piping specification.

Thermowells shall be fabricated from drilled bar stock, with minimum wall thickness of 4.8mm, and 6.5mm bore. Bore shall be concentric with the outside diameter to within 10% of wall thickness.

Thermowells shall be designed to withstand vibration stresses caused by stream velocity. Wake frequency at maximum flow velocity shall be less than 80 per cent of the natural frequency of the thermowell. The Vendor shall provide calculations to ASME Performance Test Code 19.3, Part 3: Instruments and Apparatus Temperature Measurement.

Thermowells shall project into the centre third of pipe diameter, up to a maximum immersion length of 127mm (5inches) as per API RP551. Where a thermowell is required in line sizes DN80 or less, a line section enlarged to DN100 shall be provided. Thermowells shall not be installed in elbows.

Lagging extensions shall be provided on insulated piping and insulated vessels.

Thermowells for use as test wells shall be provided with a stainless steel plug and chain.

All thermowells will be provided with pressure test and NDT certificates.

Văn bản này được xác thực tại https://eoffice.vietsov.com.vn với số định danh: 334/25-CV-TDH/NIPI

5.2.2 Temperature Gauges

Local temperature indication shall be Bimetallic thermometer type and provided by gauges with 100mm dials, every angle head, 316SS construction and zero adjustment. Where the use of rigid stem temperature gauges would hamper reading of the scale, remote-mounted gauges with capillary extension may be used.

Gauge accuracy shall be ±1% full scale.

5.2.3 Temperature Sensors and Transmitters

For temperatures up to 350°C, measurement elements shall be platinum resistance temperature detectors, 100 ohms at 0°C to BS 1904, with RTD/current transmitters. Transmitters shall include an LCD indicator scaled in engineering units, and shall be mounted integrally in the head of the detecting element where access permits, otherwise remotely mounted.

For critical loops temperature transmitters shall use dual sensors with HOT BACKUP facility.

Surface metal temperatures shall be measured by thermocouples secured to the surface.

Thermocouples shall normally be the mineral-insulated metal-sheathed type, isolated from earth. Characteristics of mV versus temperature shall conform with BS 4937.

Electrical connection shall be ½" NPT.

5.2.4 Thermocouples

Thermocouples shall be mineral insulated and sheathed. The hot junction shall be electrically insulated from the sheath.

Thermoelectric properties, color coding, and limits of error of thermocouples and thermocouple extension wires shall conform to IEC 60584.

In general thermocouples shall be Type K (Chromel-Alumel) for the temperature range - 20°C to 1000°C.

For temperatures above 1000°C, Type R (Platinum/13% Rhodium – Platinum) shall be used.

Thermocouples for temperature-differential measurements shall be electrically isolated from ground.

All thermocouple instruments shall have thermocouple burn-out indication. This will be full upscale or down scale as per specific requirement.

Thermocouple wires (if and when required) shall be as short possible prior to the temperature transmitter.

5.3 Level Instruments

5.3.1 General

Where possible, vessel bridles with DN80 ANSI flanges shall be used for multiple level instrument installations. Process control and safety instruments shall be mounted on separate bridles and have difference nozzles.

Vent and drain connections shall be provided. Vent connections shall be plugged, drain and test connections shall be valved and piped to the platform drains system.

For utility system, level measurement greater than two meters and fixed S.G., a differential type pressure transmitter shall be used. Consideration shall be given to the use of wet legs in this application.

All flanges on the level instrument pressure retaining parts shall be of the same type and rating as the process flanges, and shall be in accordance with the vessel trim specification.

Transmitters shall be fitted with LCD output indicators, scaled 0 –100%. Where this is not possible or desirable, a separate loop-powered indicator shall be installed.

The transmitter housings shall be SS316. Accuracy shall be in range 0.25% of full scale. Output signals shall be 4-20mA with HART.

Electrical connection shall be ½" NPT.

Heat tracing system including electrical heat tracing, isolation, distribution panels... shall be required where necessary. The 220VAC, 1Ph incoming power will be provide by purchaser based on Vendor calculation for power consumption. Electrical heat tracing device shall be suitable for Class 1, Zone 2, Group IIA T3. All technical requirements for heat tracing system shall follow IEEE 515.

Văn bản này được xác thực tại https://eoffice.vietsov.com.vn với số định danh: 334/25-CV-TDH/NIPI

5.3.2 Displacement Type Level Instruments

Displacement type level instruments shall be of the externally mounted type.

Preferred ranges are: 356mm 813mm 1219mm

In cases where these steps are too large, intermediate rages of 559 and 1015mm may be specified. For ranges over 1219mm differential pressure instruments are preferred.

Displacer chambers for external displacers shall have minimum DN50 ANSI 300 RF flanged vessel connections.

'Side and Side' connections shall be used with ring type joints or similar connections. 'Side and top' connections shall be used only in cases where this would avoid a pocket in the connecting piping (on small vessels).

Constructions using air fins or torque tube extensions shall be specified for high and low temperature services.

Displacer material shall be compatible with the vessel specifications. Special attention shall be paid to correct welding and heat treatment services.

Torque tube shall be Inconel or Monel minimum, with nylon bushing type bearings.

All other wetted parts shall be 316SS or as approved by Purchaser.

Connection for internal displacer shall be DN100 flanged, unless otherwise specified and approved by the Purchaser.

5.3.3 Magnetic Float Level Gauge

Magnetic Float type level gauges used externally to vessels shall include the following specific features:

- An external gauge chamber
- A hermetically sealed float, which shall have a minimum positive buoyancy in the lower fluid, at the minimum specified density. Vented or pressure-equalized floats shall not be used. The float shall contain a permanent magnet
- Float shall be able to withstand the full design pressure, not just a margin above operating pressure
- Float specific gravity shall be properly selected such that magnetic coverage be 360 degrees.
- Clearance between the float and the gauge chamber internal walls shall be adequate for the intended service, particularly in respect to expected solids or waxes which may occur.
- The gauge chamber shall be sized with due consideration to the float length ·to ensure that float can be accommodated, with clearance, at the specified 0% and 100% of measuring range levels, inclusive of worst case specified density variation. For side entry chambers, the 0% and 100% points correspond to the center line of the process flanges, unless otherwise noted.
- An external visual level indicator, comprising a series of pivoted flapper bars magnetically coupled to the float shall be provided. The indicator bar shall be contained within a hermetically sealed polycarbonate or glass transparent enclosure. It shall be possible to remove the Indicator bar from the enclosure for maintenance. A graduated ruler bar, parallel to the indicator bar, shall also be provided, calibrated in mm. The origin for the scale shall correspond to the relevant level sketch.
- The ruler bar shall be made of SS316L. Numbers shall be painted on and embossed into the metal ruler.
- Top and bottom travel stops shall be fitted to all chambers.
- Means shall be provided to secure the float during transportation.
- All lengths shall be standardized platform wide as far as possible.

Level float elements shall be external chamber type. Floats shall be entered on the instrument data sheet, and marked on the instrument nameplate.

5.3.4 Differential Pressure Level Instruments

The transmitter body shall be suitable for either direct flange-mounted to vessel piping isolation valve or remote mounted type with capillary. The transmitter body and diaphragm sensor materials shall be manufactured from 316 stainless steel or superior metals.

The differential sensor unit shall be able to withstand loss of design static pressure on either side of the diaphragm without permanent damage to the sensor.

Văn bản này được xác thực tại https://eoffice.vietsov.com.vn với số định danh: 334/25-CV-TDH/NIPI

Where plugging, condensation of vapor or vaporization is liable to occur chemical seals shall be utilized together with flushing/calibration ring. 'Wet' reference legs for level measurements are not acceptable.

5.3.5 Guided Wave Radar level transmitter

Guided wave radar instruments shall be based on Time Domain Reflectometry (TDR) technology.

Vessel connections of GWR transmitter's head shall be flanged and removal of the transmitter shall be possible in situ with the vessel still pressurized.

Stilling wells if required shall be provided. Manufacturer shall advise the type of probe as selection is dependent on service applications.

5.3.6 Magnetostrictive Level Transmitters (MTL)

Level transmitter shall be included with the magnetic gauge, see section 5.3.3 for gauge requirements.

Transmitter shall be side-bottom mounting. Transmitter shall meet the same enclosure design, signal requirements and electrical area classification defined for other types of level transmitters.

They shall be rated for the design pressure and temperature of the monitored equipment for the service ratings.

5.3.7 Other Level Instrument type

If none of the above types satisfies the requirement of specified application, other type such as capacitance, ultrasonic, etc. can be used with approval by COMPANY.

5.4 Flow Meter Assembly

Supplier to implement calculation, selection, engineering, procurement/ fabrication and delivery of the complete Flow Meter assembly, including meter, pressure transmitter, temperature transmitter, meter tubes, strainer, flanges, gaskets, bolts, nuts, cable, flow computer and all other accessories following API MPMS so that the owner don't need to provide any additional materials to perform the meter assembly. All components can be disassembled for transport and shall be reassembled on the offshore platform.

Sizing calculation/selection, hook-up drawings, full catalogs, data sheets, bill of materials shall be attached to the proposal.

Electrical connection shall be ½" NPT.

5.5 Orifice Plates

5.5.1 Orifice Plate Assemblies

Orifice plates shall be used for Gas service.

Transmitter range and orifice sizing shall be arranged such that normally:

- The differential pressure at maximum flow rate is 25kPa. If circumstances dictate otherwise, the differential pressure shall be a simple multiple or fraction of 25kPa, Vendor to provide the suitable value of Dp for Company's approval. Maximum Dp shall be 50kPa.
- The d/D ratio shall be in the range of 0.2 to 0.75.
- The upper range value of the flow instrument shall be a whole number multiple of the lower range value, to provide straightforward interpretation of chart scales.

The turndown ratio shall not greater than 5:1 unless otherwise specified in Datasheet documents.

Orifice plates shall be square edge, constructed from 316SS and have an identification tab, external to the process, with the following information stamped on the upstream side:

- Tag no
- Material
- Orifice bore size (specified or calculated)
- d (bore corrected to 20°C)
- Line Size

Orifice plates, flanges and fittings shall be fabricated in accordance with ISO 5167 or AGA - Gas Measurement Committee, Report No. 3 (AGA 3). The plate finish shall be 15-20 micro-inch roughness. The Vendor shall

Văn bản này được xác thực tại https://eoffice.vietsov.com.vn với số định danh: 334/25-CV-TDH/NIPI

provide a measurement report showing that the orifice plate is within the tolerance limit of the AGA 3. The measurement must be traceable to a known primary reference standard like NIST.

Orifice fitting, quick change orifice fitting or equivalent type orifice holder shall be preferred over conventional orifice holder on live hydrocarbon service. Orifice holder of 8" or less shall have a locating dowel pin on the sealing bar and index hole on the plate holder to ensure that the orifice plate is fully seated and concentric with the line bore. Orifice holder larger than 8" shall have special positioning set screws. These shall be permanently installed at the factory and located so that impinge on the plate holder on all four edges, fixing its position. The seal bar shall have a top set screw that prevents the fitting from being fully sealed off unless the holder is fully seated and centered.

Where conventional orifice carriers are allowed by the Purchaser, they shall be in accordance with the piping classification, have a minimum flange rating of 300 ANSI, be of minimum size DN50 and equipped with jacking bolts. Two sets of alignment dowel pins shall be furnished to ensure mating flanges are aligned correctly.

Orifice assemblies shall be located in horizontal pipe runs. Tapping shall be 1/2" NPT and be 45° above the horizontal for gases, and 45° below for liquids. Upstream and downstream tappings shall be orientated 90° to each other.

Generally, for non-fiscal measurement, the straight lengths of upstream and downstream pipe work run for an orifice installation shall be 15D and 8D respectively (10D and 5D minimum). No connections shall be made in either the upstream or downstream straight pipe work, other than the orifice flange tappings. The piping layout shall always be arranged such that straightening vanes are not required and gas meter runs are self-draining.

Upstream elbows in more than one plane shall be avoided to minimize vorticity.

Piping and equipment shall be arranged so that flashing does not occur at or upstream of orifice plates.

Eccentric, segmental or quadrant edged orifices may be used for special services such as slurry, wet gas or highly viscous service.

5.5.2 Differential pressure flow transmitter

Refer section 5.1.4 for Differential pressure transmitter requirement.

Accuracy shall be within 0.25% of the scale range.

Differential pressure flow transmitters shall be fitted with a 5-valve manifold, mounted directly to the transmitter. The manifold shall be fixed to the mounting arrangement, allowing the transmitter to be freely removed without disturbing impulse lines.

Where possible, the transmitter should be close coupled to the process to keep tubing length to a minimum.

5.6 Restriction Orifice Plates

The Vendor shall provide calculations for sizing, and for stress calculation to validate plate thickness.

5.7 Coriolis Flow Meter

The Coriolis meter shall meet the requirements in ISO 10790. 1

1 A typical uncertainty specification is 0.5% of reading on mass flow (until the influence of the zero stability impacts the measurement).

Coriolis meter shall be used as the mass flow-measuring element and density measuring element.

Coriolis Meter shall be selected such that the nominal bore size of the sensor is equal or less than line size.

Coriolis Meter shall have the flanged end connection, rated for the associated piping class.

Any special cable and/or hardware that required for make the system complete shall be supplied by Contractor.

Contractor shall ensure the sensor and wetted part are compatible with the process fluid condition. The sensor (metal tube) shall be made of SS316 at a minimum.

1 The coriolis meter transmitter shall be 'SMART' type with 24VDC power supply. Output signal shall be Modbus interface and optional 4-20mA with local indicator.

Transmitter mounting type can be remote or direct otherwise specified in Datasheet. With remote mounting transmitter, pipe 2" mounting kit, internal cable from transmitter to sensor and suitable cable glands both end shall be provided by VENDOR. Transmitter housing material shall be SS316, if SS316 cannot be provided as

Văn bản này được xác thực tại https://eoffice.vietsov.com.vn với số định danh: 334/25-CV-TDH/NIPI

Manufacture standard, cooper free Aluminum Alloy Epoxy Coated and certified for offshore/Marine application can be accepted.

5.8 Ultrasonic Flowmeters

Ultrasonic Flow Meters (USM) can be used to measure gas and shall be based on time-of-travel method.

USM shall be in-line type with flanged end connections. Flange shall be in accordance to ASME B16.5.

1 The USM shall consist of flow meter / element and the flow transmitter. In order to meet the performances, calculations and selections of the meter shall be scope of Vendor. The USM shall be able to operate reliably even under unsteady flow, pulsating pressure, varying gas composition and temperature, and the wide flow turndown ranges typical of flare systems.

In general, accuracy shall be better than +/-1% of span.

1 The Ultrasonic meter transmitter shall be 'SMART' type with 24VDC power supply. Output signal shall be Modbus interface 4-20mA with local indicator (HART type is preferred).

Transmitter mounting type can be remote or direct otherwise specified in Datasheet. With remote mounting transmitter, pipe 2" mounting kit, internal cable from transmitter to sensor and suitable cable glands both end shall be provided by VENDOR. Transmitter housing material shall be SS316 if SS316 cannot be provided as Manufacture standard, cooper free Aluminum Alloy Epoxy Coated and certified for offshore/Marine application can be accepted.

5.9 Rotameter

1 Rotameter shall be of the tapered tube and float type. All wetted parts of rotameter shall be minimum stainless steel (SS316). The meter housings shall be a minimum 316 stainless steel unless otherwise specified and protection IP56 as minimum.

Rotameter for remote monitoring shall be provided with transmitter. Output signals of transmitter shall be 4-20mA with HART. Electrical connection shall be ½" NPT.

Transmitters shall include an LCD indicator scaled in engineering units, and shall be mounted integrally in the head of the detecting element where access permits, otherwise remotely mounted.

Rotameter shall have a metal metering tube depending on the application, process conditions, etc. Where metal tube is required, material shall meet the relevant piping specification as well as connecting flanges.

For the Rotameter with metallic tube, the connection between the moving and indicating /transmitting parts shall be glandless magnetic coupling.

Floats shall be self-cleaning and shall be designed for maximum immunity to viscosity variations and dimensional stability.

Rotameter shall be fitted with inlet and outlet float stops.

Rotameter fitted with a constant flow regulator shall only be used for fixed rate flows such as flushing or purging.

Process connections shall be:

- Flanged, according to the relevant piping specification and ASME B16.5.
- Screwed NPT for flushing or purging service.

The rangeability of the rotameter shall be 10:1 and shall have and accuracy of ± 2 % or better.

5.10 Turbine Meter

1 The VENDOR shall calibrate the liquid turbine meters in accordance with the API Manual of Petroleum Measurement Standards (MPMS), Chapter 5, Section 3.

All meters shall be equipped with pre-amplifiers.

Preamplifiers shall be compatible with the turbine meter pickups both in connection and signal.

Preamplifiers shall operate on 24V DC, and protection IP56, Ex'd' as minimum.

Electrical connection shall be ½" NPT.

Preamplifiers shall include an LCD indicator scaled in engineering units, and shall be mounted integrally with the meter where access permits, otherwise remotely mounted.

Văn bản này được xác thực tại https://eoffice.vietsov.com.vn với số định danh: 334/25-CV-TDH/NIPI

The meter body material shall be suitable with Piping design and process connections shall be flanged type, according to the relevant piping specification and ASME B16.5.

Preamplifiers housings shall be a minimum 316 stainless steel unless otherwise specified.

Turbine meters for liquids shall have a linearity of +/- 0.15% and a repeatability of 0.05% on non custody services.

For liquid meters rotor hubs, blades, and rims shall be, as a minimum, stainless steel.

5.11 Water cut meter

1 A Water cut meter (*Water/condensate in Oil Analyser*) shall be provided on the liquid line of the Separator to indicate the quantity of Produced water and Condensate on liquid streams.

The water cut meter shall be certified for use in a Class 1, Zone 2, Gas Group IIA temperature class T3 hazardous area as a minimum.

Humidity Operating Range shall be at least from 5%-100% RH, non-condensing.

Water content range shall be from 0% to 100%.

The transmitter output shall be 24VDC Loop Powered and provided 4-20 mA (% of Water) output with HART protocol, real time compensation for temperature effect. In general, the transmitter shall be better than +/-1% absolute accuracy, 0.25% repeatability, 0.05% sensitivity, less than 1 sec of response time and 0%-100%WC calibrated range.

Communication Port of Modbus TCP/IP and/or RS-485 (Modbus TCP/IP is preferred) shall be provided.

All Sensors, spools, flanges, enclosure/transmitter housing materials shall be SS316 and enclosure protection IP56 as minimum.

The Static Mixer shall be designed in accordance with ASME B31.3. The mixer element shall be SS316.

The piping, flanges shall be design and in accordance with ASME B.16.5.

All analysers shall be provided with necessary calibration test kit for zero and span check.

5.12 Pig Signaller

1

5.12.1 Pig Signaller transmitter

Pig signaller transmitter shall be Non-Intrusive Type and designed to clamp onto the outside of the pipe, utilizing ultrasonic detection principle.

The pig signaller transmitter shall be provided with local and remote indication to indicate the passing pig. Remote indication shall be loop powered (24VDC) and with 4-20mA (HART) output signal wired to the platform's PCS for monitoring purpose.

The complete pig signaller transmitter including sensor assembly shall be suitable for Class 1, Zone 2 Group IIA T3 hazardous area installation. The Signaller and sensor housing shall be SS316, enclosure protection IP56 as minimum.

5.12.2 Pig Signaller Indicator

Pig signaller indicator shall be Intrusive Type and designed with flanged connection to the pipe, utilizing mechanical trigger detection principle.

The pig signaller indicator shall be provided with local indicator, mechanical type Flag up with Manual reset.

6. GENERAL REQUIREMENT FOR FIRE AND GAS DEVICES

6.1 Point Gas Detector

Gas detector shall be located in process areas, generator rooms and control room air intake.

The detecting unit included in the sensor head shall provide adequate sensitivity and the stability necessary, under all conditions, to repeat any reading within ± 3 percent over the full-scale range.

"Smart" sensor technology shall be used when selecting gas detection systems. The selected detector's maintenance/calibration frequency shall be stated. Low maintenance requirements shall be a factor in the selection.

Văn bản này được xác thực tại https://eoffice.vietsov.com.vn với số định danh: 334/25-CV-TDH/NIPI

Detectors shall be powered from 24VDC, with a 4-20mA HART signal loop to cover the calibrated range. Detector faults shall be signaled by the range below 4mA.

Cable entries shall be ½" NPT-F.

Detectors requiring sample pumps for operation shall not be used.

Fixed-point combustible-gas detectors shall be based on infrared absorption technology and shall be calibrated 0-100% LEL (lower explosive limit) of Methane in air. Detectors shall initiate responses at two different concentrations: for warning alarms and for initiation of executive action. Typical values of these set-points are: 20% and 60% LEL for general process areas and shall be reviewed by the Contractor during the risk assessment and detail design, and revised as required.

The alarm condition shall not be resettable until the specific detector reading has dropped below the warning alarm level as applicable.

Operator response shall be required to clear the audible and visual alarms.

Catalytic type detectors shall not be used.

All detector devices shall be certified SIL2 rated as minimum.

All detectors shall be equipped with built-in field display in order to calibrate easily.

6.2 Hydrogen Gas Detectors

Hydrogen detection will be required in battery rooms if hydrogen is generated during the battery charging process. Catalytic type detectors can be used.

All detector devices shall be certified SIL2 rated as minimum.

Detectors shall be powered from 24VDC, with a 4-20mA HART signal loop to cover the calibrated range. Detector faults shall be signaled by the range below 4mA.

Battery room ventilation shall be sufficient as to prevent accumulation of H2 exceeding 20% LEL (high gas alarm) and 60% LEL high high gas alarm) from a single detector shall generate an alarm at the SIS. Detection of 60% LEL from a single detector shall also initiate alarm at mimic panel.

Cable entries shall be ½" NPT-F.

Catalytic bead sensors shall be used to detect the accumulation hydrogen in the enclosed area. A minimum of two detectors shall be provided in the enclosed area.

6.3 Flame detector

Optical flame detectors shall be infra-red triple spectrum type and shall make use of such sensors, filters, and/or design to reject such phenomena as electric arcs, heaters, artificial light sources, lightning, and be completely "solar blind". The detectors shall be able to detect all types of flaming fires. The minimum cone of vision shall be 90°.

The detectors shall alarm to a 0.1m2 n-Heptane fire at 20 meters within three (03) seconds unless otherwise stated in data sheet.

Detectors shall be powered from 24VDC, with a 4-20mA HART signal loop to cover the calibrated range. Detector faults and dirty optics shall be signaled at level less than 4 mA signal. Sufficient margin shall be allowed between fault, normal and alarm levels to minimize spurious alarms.

Cable entries shall be ½" NPT-F.

Optical flame detectors shall have automatic, self-diagnostic circuitry that continuously monitors the optical surfaces, sensor sensitivity, and electronic circuitry, and shall fail to fault status. Any detector malfunction shall be alarmed on the SIS.

Test kits shall be supplied for testing of each type of detector from deck level or fixed platforms.

Fire and flame detectors employ the latest technology available, reliable and have low incidence of nuisance alarms, long term stability and long calibration intervals.

The signal from these detectors is wired to the analogue module of SIS, and these detectors send the analogue values which indicate the fault state, normal range value, etc. The wiring to these detectors is therefore line-monitored.

All conventional flame detectors shall be certified SIL2 rated as minimum.

Văn bản này được xác thực tại https://eoffice.vietsov.com.vn với số định danh: 334/25-CV-TDH/NIPI

Detail installation of the detectors shall be defined by Contractor's design.

6.4 Smoke Detector

Smoke detectors sense combustion products and should be used within enclosed spaces which are not subject to extremes of temperature, humidity, dust or wind, complying with DNV-OS-D301.

Smoke detectors shall be certified to operate before the smoke density exceeds 12.5% obscuration per meter, but not until the smoke density exceeds 2% obscuration per meter.

Detectors shall incorporate an integral LED indicator for confirmation that the unit is active. Detectors that are not visible, such as ceiling void or under floor, shall provide an output to a remote LED located in the room being monitored.

Ionization/photoelectric type smoke detectors shall be installed in offices and sleeping cabins;

A detector base shall be provided for connecting the individual detectors to the SIS.

Cable entries shall be ½" NPT-F complete with cable gland.

In general, all fire and gas detection equipment, ESD Process Field Devices and ESD Driven actuating devices shall be certified for use in a Zone 1, Gas Group IIA temperature class T3 Hazardous Area. For non-hazardous areas such control rooms, living quarter, etc. where protected by pressurizes system completed with gas detection at air intakes, non-certified smoke and heat detector are acceptable for use.

Smoke detectors installed within the Battery Room shall be suitable for Class 1 Zone 1 Group IIC T3. 1

Detector shall be powered from 24VDC.

Smoke detectors shall remain in alarm state until reset by the SIS. End-Of-Line resistances shall be provided by VENDOR.

6.5 Heat detectors

Heat detectors may be installed in areas where flammable and combustible materials are handled or stored, or where local normal operating conditions are not considered suitable for installing the faster-acting smoke detectors according to DNV-OS-D301.

The positioning of point heat detectors should take account of the density and spacing, including their proximity to bulkheads. Detectors in high ceiling rooms or multiple floor areas should take account of the reduced sensitivity of the detectors at heights above 8 m.

Heat detectors shall also be installed within the machinery enclosures as a complement to IR detectors installed. Where specified such heat detectors shall be based on Rate of Rise type (ROR) principle. ROR type heat detectors shall actuate when the temperature rise within the enclosure exceeds 1degree C/minute. Electrical Conductivity–Type Rate-of-Rise Detector spot-type sensing element in which resistance changes due to a change in temperature. The rate of change of resistance is monitored by associated control equipment, and an alarm is initiated when the rate of temperature increase exceeds a preset value. The sensitivity and the preset temperature value can be adjustable.

Detectors shall be of the plug in base type.

Rate of rise heat detectors shall have no moving parts and shall operate on the twin thermistor principle or similar solid state circuitry.

Detectors shall incorporate an integral LED indicator for confirmation that the unit is active. Detectors that are not visible, such as ceiling void or under floor, shall provide an output to a remote LED located in the room being monitored.

In general, all fire and gas detection equipment, ESD Process Field Devices and ESD Driven actuating devices shall be certified for use in a Zone 1, Gas Group IIA temperature class T3 Hazardous Area. For non-hazardous areas such control rooms, living quarter, etc. where protected by pressurized system completed with gas detection at air intakes, non-certified smoke and heat detector are acceptable for use.

Cable entries shall be ½" NPT-F.

Detector shall be powered from 24VDC.

Heat detectors shall remain in alarm state until reset by the SIS. End-Of-Line resistances shall be provided by VENDOR.

Văn bản này được xác thực tại https://eoffice.vietsov.com.vn với số định danh: 334/25-CV-TDH/NIPI

6.6 Manual Call Point Pushbuttons

Manual call point pushbuttons shall be arranged strategically on the platform's different areas installed no higher than 1.4m over floor level. All switches shall mount at a height of 1.3 meters in easily accessible, well lighted, conspicuous areas. The Manual call point shall be provided as specified in Fire & Gas Layout.

The Manual call point shall have screw-less terminals with built-in strain limits accepting wires of 1.5 mm2.

Manual call point pushbutton (MCP) shall be provided throughout the Platform and at the entry / exit points, and escape route stairways.

MCP of the conventional type shall be of the lift flap press button latching type. All MCP shall be constructed from 316 stainless steel or glass reinforced polyester (GRP).

MCP shall be certified for the hazardous area, color red.

The MCP shall be designed for fast, simple and failure-proof dismantling and assembling and shall have provision for easy and clear labelling.

The MCP shall have a sealable opening for wire introduction through compression cable glands on the top and bottom of housing.

The lid of the MCP shall be permanently fixed to the body of the call point by a hinger.

Contact shall be SPDT type with the rated voltage/current shall be 24VDC/2A.

Cable entries shall be ½" NPT-F.

The switches shall also provide with SS316 lid and label fastener and mounting accessories. Where switches are used as inputs to the SIS, they shall be voltage and ground-free, and shall be closed during normal (safe) operation.

End-Of-Line resistances shall be provided by VENDOR.

6.7 Emergency Push Button

The ESD push button shall be provided as specified in Fire & Gas Layout.

All push buttons shall be constructed from 316 stainless steel.

The switches shall be Push Button Latching key reset, and shall be wired directly and individually to the SIS.

Contact shall be SPDT type with the rated voltage/current shall be 24VDC/2A.

Cable entries shall be ½" NPT-F.

Switches shall be prominently located and colored yellow for ESD-1 and blue for APS, so as to be highly visible, shall be protected from inadvertent operation by shrouds or flaps, and clearly labelled with a description of their duty.

The switches shall also provide with SS316 lid and label fastener and mounting accessories.

Where switches are used as inputs to the SIS, they shall be voltage and ground-free, and shall be closed during normal (safe) operation.

All switches shall mount at a height of 1.3 meters in easily accessible, well lighted, conspicuous areas.

End-Of-Line resistances shall be provided by VENDOR.

6.8 Open Path Flammable Gas Detector

The IR open path gas detector (Line of Sight (LOS)) shall comprise separate transmitter and receiver units allowing gas concentration within a specified distant to be measured without the use of reflectors.

Response time shall be less than 5 seconds following a step change in concentration.

Gas concentration shall be in path average LEL meters for the specified composition.

Detector shall measure hydrocarbon gasses between methane to hexane, but shall predominantly be methane and therefore the unit shall be calibrated to methane with a range of 0 to 5 LEL meters and 0 to 5000 as an option if required.

Detectors shall remain fully functional with a power supply 24VDC, with a 4-20mA HART signal loop to cover the calibrated range. Blocked beam shall raise an alarm only (<4mA) after an adjustable time delay.

Cable entries shall be ½" NPT-F.

Văn bản này được xác thực tại https://eoffice.vietsov.com.vn với số định danh: 334/25-CV-TDH/NIPI

Detector shall be certified for use in a Class 1, Zone 2, Gas Group IIA temperature class T3 Hazardous Area and certified SIL2 rated as minimum.

Humidity Operating Range shall be at least from 5%-100% RH, non-condensing.

The VENDOR shall provide details that demonstrate the immunity to direct and reflective sunlight and vibration.

Transmitter and receiver pairs will be installed in line of sight locations covering process hazardous areas. VENDORs shall provide all necessary alignment and calibration tools / software to assist the alignment setup and calibration.

6.9 Sounder

The Sounders shall be provided as specified in Fire & Gas Layout.

All Sounders shall be constructed from 316 stainless steel or glass reinforced polyester (GRP).

All sounders shall be supplied with suitable 316 stainless steel mounting assembly that allows speaker to be oriented in any direction and locked in desired position.

1 Cable entries shall be ½" NPT-F.

All sounders shall be certified for area suitable with hazardous area classification.

The indoor sounders shall be maximum rated of 6 watts. These speaker shall be ceiling or wall mouting type.

The hazardous/outdoor sounders shall be maximum rated of 25 watts of power handling capability with 118dBA Sound Pressure Level (SPL), horn type and wide angle. VENDOR shall consider the effect of heavy and high wind in determining the suitable size of outdoor sounders.

6.10 Beacon

The Beacons shall be provided as specified in Fire & Gas Layout.

Flashing beacons color shall be of Red, Yellow, and Blue to show different alarms from Fire and Gas system.

All Sounders shall be constructed from 316 stainless steel or glass reinforced polyester (GRP).

1 Cable entries shall be ½" NPT-F.

All beacons shall be certified for area suitable with hazardous area classification.

Indoor beacon shall be Xeon/LED type.

All beacons shall meet the minimum requirement as following:

Supply Voltage	:	24VDC
Tube Energy	:	Minimum 15 Joules each color
Bulb type	:	Xenon
Effective Intensity	:	95Cd min, at 60 flashes per minute
Color lens	:	Red, Yellow, Blue, ...

7. GENERAL REQUIREMENT FOR INSTRUMENTATION CABLES

7.1 General

Cables shall be segregated for the following services as a minimum:

- 4 to 20 mA signals (Individually screen)
- mV signals (Individually screen)
- Pulse signals (Individually screen)
- RTDs (Individually screen)
- 24 VDC solenoid signals (No screen)
- Digital signals (Overall screen)
- Vibration probes (Individually screen)
- Any other signal (as required)
- Each communication (as per required application)
- Earthing (1C_without armour_UX type)

Văn bản này được xác thực tại https://eoffice.vietsov.com.vn với số định danh: 334/25-CV-TDH/NIPI

Cross section for copper conductors shall be as follows:

- Power cables (i.e. for solenoids, lamps, 24VDC interface signals, etc.): 1.5 mm² minimum
- Control cables (i.e. for transmitters, positioners, limit switches): 1.0 mm² minimum
- Earthing cable: 2.5mm² minimum, cable tray jumpers and end point connection 4.0mm²

1

Note: Cable with rated voltage 600V is not required to comply with IEC 60092-376.

All cable materials shall be new and unused, of current manufacture, of the highest grade and free from all defects and imperfections affecting performance.

Cable Core Identification

Color coding for pair/triple identification shall be as described below.

Pairs and triples shall be identified by having the pair/triple number printed on the insulation in contrasting color.

- Pair colors : Blue and Black
- Triad colors : Blue, Black and Brown

Outer Sheath Color

The outer sheath color shall be as follow:

- Digital signals : Grey
- Analogue signals : Grey
- IS signal (Digital/Analogue) : Blue
- Electrical signals (solenoid) : Black
- Earthing cable : Green & Yellow strips, lengthways along the cable.
- FGS signals : Red

Marking on cables

The cable outer sheath shall be marked on its surface at every interval of 1 meter with the following information:

- Voltage grade
- Cable type
- Number of Pairs/Triples and conductor size
- IEC standards
- Manufacturer's name or trademark
- Year of manufacturer

Marking on drums

The wooden drum shall be marked with the following information:

- Drum Number
- Cable type
- Voltage grade
- Number of Pairs/Triples and conductor size
- Cable length (m)
- Net and gross weight
- Manufacturer's name or trademark
- Month and year of manufacture

Packing

The cable shall be coiled in non-returnable wooden drums.

The ends of cables shall be sealed against the ingress of moisture, dirt and insects and the end projecting from the drum shall be adequately protected against mechanical damage during lifting, transportation, intermediate storage and site handling.

Both ends of cable shall be packed out of drum for easy check number of length.

Văn bản này được xác thực tại https://eoffice.vietsov.com.vn với số định danh: 334/25-CV-TDH/NIPI

7.2 Instrument Cables for non-essential service

Cable construction shall be as per IEC 60092-376; NEK TS 606. In general, conductor insulation rating shall be as a minimum 150/250V (300V) in accordance with IEC 60092-3. For fire resistant and flame retardant cables both 300V and 600V rated voltage are acceptable. Maximum operating temperature 85°C.

Instrument cables for indoor/ outdoor hazardous and non-hazardous areas, shall be constructed as follows:

(a)	Conductors	:	Tinned annealed stranded copper as per IEC 60228, Class 2.
(b)	Insulation	:	EPR to IEC 60092-360.
(c)	Individual Screen	:	Aluminium back polyester tape, stranded copper drain core
(d)	Overall Screen (as optional).	:	Aluminium back polyester tape, stranded copper drain core.
(e)	Core identification	:	By colour code.
(f)	Inner sheath	:	LSZH compound to IEC 60092-360.
(g)	Armour	:	Tinned Copper Wire Braided (TCWB).
(h)	Outer sheath	:	Extruded layer of flame retardant compound outer sheath to IEC 60332-3 Cat A (reduced propagation). Halogen-free mud resistant thermoset compound in accordance with type SHF Mud in accordance with NEK TS 606.
(i)	Requirement	:	IEC 60092-350, IEC 60092-360, IEC 60228, IEC 60332-3 Cat. A, IEC 60754, IEC 61034, IEC 60092-376, NEK 606.

7.3 Instrument Cables for essential service

Cable construction shall be as per IEC 60092-376; NEK TS 606. In general, conductor insulation rating shall be as a minimum 150/250V (300V) in accordance with IEC 60092-3. For fire resistant and flame retardant cables both 300V and 600V rated voltage are acceptable. Maximum operating temperature 85°C.

Instrument cables for indoor/ outdoor hazardous and non-hazardous areas, shall be constructed as follows:

(a)	Conductors	:	Tinned annealed stranded copper as per IEC 60228, Class 2.
(b)	Insulation	:	EPR to IEC 60092-360.
(c)	Individual Screen	:	Aluminium back polyester tape, stranded copper drain core
(d)	Overall Screen (as optional).	:	Aluminium back polyester tape, stranded copper drain core.
(e)	Fire resistant layer	:	Fire resistant layer to IEC 60331 shall be mica glass tapes applied over the conductor. Cable must be able to withstand 750°C for 3 hours.
(f)	Core identification	:	By colour code.
(g)	Inner sheath	:	LSZH compound to IEC 60092-360.
(h)	Armour	:	Tinned Copper Wire Braided (TCWB).
(i)	Outer sheath	:	Extruded layer of flame retardant compound outer sheath to IEC 60332-3 Cat A (reduced propagation). Fire resistance as per IEC 60331. Halogen-free mud resistant thermoset compound in accordance with type SHF Mud in accordance with NEK TS 606.
(j)	Requirement	:	IEC 60092-350, IEC 60092-360, IEC 60228, IEC 60332-3 Cat. A, IEC 60754, IEC 61034, IEC 60092-376, IEC 60331, NEK 606.

7.4 Communication Cable

Modbus RTU RS-485 cable construction shall be as per ANSI/TIA/EIA-485 Specification.

Communication cable shall be constructed as follows:

Văn bản này được xác thực tại https://eoffice.vietsov.com.vn với số định danh: 334/25-CV-TDH/NIPI

- Rated Voltage 150/250V (300).
- Flame retardant in accordance with IEC 60332-3.
- Two twisted paired, 22/24 AWG tinned copper conductor;
- Overall foil shield with tinned copper drain wire plus tinned copper braid shield;
- SHF Mud in accordance with NEK TS 606.

8. GENERAL REQUIREMENT FOR BULK MATERIALS

8.1 Cable tray

8.1.1 Stainless Steel Cable tray

The cable tray/ladder shall be perforated, SS316, 1.5 mm thickness.

The cover shall be SS316 1.0 mm thickness.

Resistance against corrosion for ladder and tray is classified 9B as minimum complied with IEC 61537.

System component for cable ladder and cable tray shall offer impact resistance 20J as minimum as per IEC 61537.

Wherever main cables are exposed to sunlight, or mechanical damages are going to occur during installation or chemical spillage then the main cable ladder/ tray shall be fitted with suitable covers to protect them.

8.1.2 FRP Cable tray

In general, cable trays, cable ladders and fittings shall be:

- Manufactured from Flame Retardant Glass Reinforced Polyester (GRP/FRP). The material shall be non-magnetic, UV resistant, and free from sharp edges so as not to damage the cable.
- Manufactured using the pultrusion process using a high-grade polyester resin and shall have a minimum surface veil of 200 microns thick. The minimum weight percentage of glass in these items shall be 50%.
- All GRP/FRP products shall be halogen free. Material shall be tested in accordance with IEC 60754-1 and no halogen acid should be detected.
- Cable ladder rungs shall be fixed in place in such a way that they cannot roll over during cable pulling. Ladder Rungs shall be secured in place by SS (A4) or GRP / FRP fasteners, PBT insert is preferred. Ladder rungs shall be slotted to allow for clamping of cables, they shall also be designed to prevent fluid build-up.
- Cable Trays shall be slotted base type. The perforations shall be for used with cable ties and other similar accessories.
- Withstand impact testing at an approximate energy of 10 Joules when impact testing is carried out as per the requirements of IEC61537. Testing shall be conducted without the use of covers.
- Available with drill jigs so that new splice plate perforations on side profiles of trays / ladders can be productively & safely drilled when cutting to required lengths.

Flame Retardant and Low Smoke Properties of FRP shall comply with:

- ASTM D635 and have an 'HB' classification.
- Class 1 rating in accordance with BS 476 Part 7 or ASTM E84 and UL94.
- A flame-spread index (FSI) less than 25 and a smoke development index (SDI) less than 450 so that they achieve a class 1 rating when tested in accordance with ASTM E84.
- ANSI/UL94-2013(R2021) section 8 with a V-0 classification

For the UV Resistance Properties, material shall be tested in accordance with ASTM G53 and achieve grade 5 in color change with exposure period 250 hours or better.

Cable Trays, Cable Ladders and Fittings shall not increase in weight by more than 0.5% when tested in accordance with ASTM D570 for Water Resistance. Chemical Resistance shall be tested in accordance with ASTM C581.

Văn bản này được xác thực tại https://eoffice.vietsov.com.vn với số định danh: 334/25-CV-TDH/NIPI

In case anti-static properties are required, the material shall be tested in accordance with IEC 60079 or IEC 60093 for surface resistivity.

Color of the tray and ladder shall be grey for non-anti-static, and dark grey or black for anti-static required.

8.2 Multi Cable transit

A-60 Fire rated and/or blast resistant type MCT systems shall be provided.

MCT frames shall be galvanized steel suitable for offshore application.

MCT shall be complete with all accessories to make a complete MCT system, e.g. frame, wedge, stay plates, "fire-resistant, low-smoke halogen free rubber" insert modules and insert spare modules. Lubricant shall also be included for installation of insert modules.

Insert modules shall come in two-halves with multilayer bore, which and can be peeled off to fit the installed cable outside diameter.

Transits shall be identified by weatherproof labels on each side of their penetration.

The compression system is to comprise of a compression plate and end-packer. The three-part end packer unit is to be installed from one side, and only once an external compression tool has correctly compressed the transit. The side elements of the end packer are to incorporate steel pins to evenly distribute pressure to the compression plate.

All components of the transit system are to be lubricated with a silicone lubricant to ensure ease of installation and possible future demounting for cable alterations.

Multi-cable transits shall have the following certification requirements:

- Fire rated certificates
- Accepted and approved by LR, DNVGL, ABS, BV, VR...
- Constructed and tested to DIN 4102-9 and IEC 60092-390

8.3 Cable accessories

8.3.1 Cable gland

Nickel plated brass, Ex-d certified, min IP56, suitable for group IIA, IIB, IIC, zone 1 & 2, metric/NPT pitch threaded, suitable for cables with armor/braid and inner/outer sheath. C/w lock nuts, earth tags and sealing washers.

Cable gland compression system shall be suitable for use with the cables intended. The compression/ sealing method and material shall not cause "cold flow" condition to the cables. Cable glands shall be selected to reduce the effects of "cold flow characteristics" of the cable to comply with IEC 60079-14.

Manufacturer specifications/data sheet/catalogue must be attached to the proposal for reference.

The entry thread sizes / cable O.D. (min – max) are following:

- M20 / 9 –14 mm
- M25 / 14 – 22 mm
- M32 / 22 – 32 mm
- M40 / 32 – 42 mm
- 1/2"NPT / 11 –16 mm
- 3/4"NPT / 14 –20 mm

8.3.2 Cable terminal

- Tinned copper, PVC pre-insulated, ferrule type with wire section 1.5 – 2.5mm2.
- Tinned copper, PVC pre-insulated, ring type, screw M6 with wire section 2.5mm2.

8.3.3 Cable ties

Cable ties shall be Polyamide 6.6, UV stabilized (color black), flammability UL94 class V2, tested according EN 50146, size as below:

- size 9 x 120

Văn bản này được xác thực tại https://eoffice.vietsov.com.vn với số định danh: 334/25-CV-TDH/NIPI

- size 9 x 260
- size 9 x 350

8.3.4 Cable marking

Cable marking shall be complete with marker holder for 14 char, red color and cable marker.

Cable marker:

- Number 0 to 9 (50pcs per parcel)
- Letter A to Z (50pcs per parcel)
- Conventional symbol "-" (100pcs per parcel)
- Marker for cable cross-section 1.5 to 2.5, polyamide, number 0 to 9 (100pcs per parcel)

8.4 Instrument Junction Boxes

8.4.1 General

Instrument junction boxes shall be certified for use in the hazardous area in which they are installed.

Boxes certified Explosion-Proof/Flameproof Ex "e" shall be used, suitable for using in Zone 1 hazardous area. Unless otherwise stated boxes shall provide minimum IP56 ingress protection.

Multicore cables should enter from the bottom, and 20% spare entries shall be provided cable entries shall be drilled and tapped to suit the required glands, and fitted with certified brass plugs.

Internal terminals shall be provided with at least 20% spare.

8.4.2 Construction

Increased Safety

Junction box construction shall be 1.5mm 316SS.

Boxes shall be bottom entry and side (for single cable) with a removable 316SS gland plate. The gland plate shall be drilled and tapped; 6mm thick for tapered threads and 3mm thick for parallel threads. The plate shall be bolted to the box with 316SS boltqs, sealed with a neoprene gasket and fitted with an 8mm earthing stud.

Boxes shall have four external mounting lugs, two top and bottom, drilled with 10mm fixing holes.

A full size removable stainless steel gear plate shall be fitted inside each box.

Terminals shall be Ex "e" rail-mounted tunnel-type, made of melamine. Wiring ducts shall be colored blue.

Boxes shall have doors hinged at two points with a neoprene seal fitted all round. Hinges shall be the lift-off pintle type, constructed of stainless steel; piano hinges are not acceptable.

A restraining mechanism shall prevent opening more than 160°. Screwdriver-operated door latches shall be fitted at the top and bottom.

In addition to the manufacturer's certification label, each junction box shall have an identification label attached to the box with 316SS screws in a manner which will not invalidate the hazardous area certification. The label shall be constructed of white-black-white laminated plastic and/or blue-white-blue laminated plastic for difference control/safety systems. The label shall include an engraved Tag No.

Boxes shall have grounding connection c/w SS316 earthing screw. Earthing bar shall be provided and located inside the boxes.

Explosion Proof

Explosion proof junction boxes shall be constructed from Epoxy coated copper free aluminum.

Boxes shall have at least four external mounting lugs, drilled with 10mm fixing holes, and an 8mm external earth lug.

A full size removable stainless steel gear plate shall be fitted inside each box.

Junction box lids shall have cast hinges integral to the box with stainless steel pins.

Each junction box shall have an identification label, in addition the manufacturer's certification label, attached with 316SS screws in a manner which will not invalidate the hazardous area certification. The label shall be constructed of white-black-white laminated plastic.

Văn bản này được xác thực tại https://eoffice.vietsov.com.vn với số định danh: 334/25-CV-TDH/NIPI

Terminals shall be rail-mounted tunnel-type, made of melamine.

8.5 Tubing and Fittings

All tubing and fittings shall be Imperial sizes, expressed in nominal outside diameter (OD), and all threads shall be NPT.

Process-to-instrument impulse lines, pneumatic supplies (downstream of filter/regulators) and pneumatic signal lines shall be run in seamless 316SS tubing to ASTM A269.

Impulse lines shall be ½" OD, pneumatic lines shall be 3/8" OD, unless specific applications require the use of other sizes.

Stainless steel tubing size and wall thicknesses shall be as detailed below. Maximum allowable working pressures are also detailed for each size and wall thickness.

- 3/8" OD x 0.035 " wall thickness - 19.6 MPa gauge
- 3/8" OD x 0.065 " wall thickness - 39.0 MPa gauge
- 1/2" OD x 0.035 " wall thickness - 14.7 MPa gauge
- 1/2" OD x 0.065 " wall thickness - 29.4 MPa gauge
- 1/4" OD x 0.035 " wall thickness - 25.3 MPa gauge
- 1/4" OD x 0.049 " wall thickness - 52.0 MPa gauge

Note: 3/8" and 1/2" tubing are the preferred sizes.

Threaded connections shall be NPT for all components and piping and tubing systems for process and utilities connections.

TFE thread sealant shall be used on all threaded connections. Tape shall not be used.

Tubing and fittings shall be 316SS unless specified otherwise. Tube fittings shall be twin ferrule compression type. All fittings shall be the same approved brand.

Tubing shall be supported and protected by stainless steel angle/channel or ladder/tray along the complete length of each run and shall be fastened with stainless steel saddles at a maximum of 1m intervals on straight runs.

All pneumatic exhaust ports and breathers shall be fitted with bug screens, installed facing downwards.

9. DOCUMENTATION

9.1 General

The Vendor shall provide a complete suite of documents for the works, including those described in the following sections. Hard copies plus electronic copies on DVD/CD shall be provided.

9.2 Instrument Index

The Vendor shall be provided preliminary instrument index to update them with full information for each instrument from his data. The index shall be based on Microsoft Excel.

9.3 Instrument Data Sheets

A data sheet shall be completed for every item of instrumentation equipment, including those which are part of equipment packages, except those items which form part of the bulk material take-off.

Preliminary data sheets for instruments that are attached in references must be filled by Vendor/Supplier with all required information.

When a number of items are identical in their requirements, these can be covered by a single specification sheet, providing all tag numbers are clearly listed.

Where a number of items are similar, and it can be identified that these items can be sourced from a single vendor (e.g. control valves), then these items can be covered as separate items of a single specification sheet. A data sheet covering each item, listing the individual item details as stated above, shall be completed for each item.

Văn bản này được xác thực tại https://eoffice.vietsov.com.vn với số định danh: 334/25-CV-TDH/NIPI

Where preliminary data sheet is not available for specific instrument, the Vendor shall submit his proposed data sheet for Purchaser approval according to ISA Standards.

Data sheets shall be generated using Microsoft Excel.

9.4 Instrument Calculations

The Vendor shall provide certified calculations for instruments, including but not be limited to:

- Control valve sizing (if any)
- Restriction orifice sizing and stress analysis
- Thermowell wake frequency
- Thermowell calculation
- Instrument Air Consumption
- Flow meter calculation/sizing

Where required in applied codes and standards or requested by Certify Agent, Vendor/Contractor is responsible for provision of other necessary calculations.

9.5 Instrument Tagging

The Vendor shall assign individual tag numbers in accordance with the Purchaser's established system to all instruments.

The tag number that pertains to a specific instrument shall appear on all drawings and documents.

10. CONFLICTS AND ORDER OF PRECEDENCE

In case of conflict or discrepancies between any requirements of technical specifications and/or codes & standards, the more stringent shall govern. Contractor and/or Vendor shall inform and issue officially Technical Queries to VSP for review and making decision.

11. QUALITY ASSURANCE, INSPECTION AND TESTING

11.1 Quality Assurance

The Vendor shall demonstrate that he operates a quality system in accordance with the ISO 9000 series of requirements. The effectiveness of the quality system and the Vendor's compliance with it shall be subject to monitoring by PURCHASER and in addition, may be audited following an agreed period of notice.

The Vendor shall submit a quality control program for PURCHASER review at the time of Tender. The Vendor shall provide facilities for and cooperate with PURCHASER and statutory authority inspectors during manufacturing, assembly and testing.

11.2 Inspection and Testing

Unless otherwise stated, field devices, instruments and cables aren't required inspection and testing with Purchaser's witness. However, Vendor/Contractor is responsible to provide all manufacturers' testing and inspections. Where certificates are required approvals by Third Party or others, Vendor/Contractor to provide all required certificates.

12. SPARE PARTS AND SPECIAL TOOLS

12.1 General

The Vendor shall provide in the Tender the recommended spare parts and priced lists for commissioning and operational spares as well as special tools for the equipment specified herein to cover the commissioning and start-up and the first two (2) years of operation.

12.2 Commissioning Spares

Văn bản này được xác thực tại https://eoffice.vietsov.com.vn với số định danh: 334/25-CV-TDH/NIPI

Commissioning spares should largely comprise of consumable items and spares estimated by the Vendor. The Vendor shall propose the commissioning spares which comprise of consumable item and spares that may be required during the commissioning.

12.3 Operational Spares

Replacement parts shall be the responsibility of the Vendor during the Defects Liability Period.

The Vendor shall provide a two-year list of operational spares. The quantities of spares provided shall be based on the expected reliability figures of each item.

The Vendor shall assure from equipment manufacturers that spare components and expansion module or units will be available for a minimum period of ten years after Final Acceptance

12.4 Special Tools

If special tools are required, the Vendor shall provide a priced list of all special tools required for the installation and/or maintenance of the equipment with tender. Special tools shall be purchased at the PURCHASER's discretion.

Prior to shipment each special tool shall be tagged with stainless steel tags indicating Purchase Order number, identification of the tool and equipment that the tool relates to.

13.WARRANTY AND PERFORMANCE GUARANTEE

Vendor shall provide a process and mechanical guarantee. Guarantee period shall be as stated in the commercial documentation accompanying the requisition. Compliance by the Vendor with the provisions of this Specification does not relieve them of the responsibility of furnishing instruments within the bounds of the relevant standards, suited to meet the specified service conditions.

The Vendor shall guarantee that the required quality of materials, fabrication and performance to the specified operating conditions will be met.

Unless otherwise agreed, all instruments shall be guaranteed as follows:

All instruments shall perform satisfactorily under the specified operating conditions detailed on the Instrument Data Sheets, and shall be fit for the intended purpose.

All hardware and software supplied shall be guaranteed free from defects.

All workmanship shall be guaranteed free of defects and in accordance with the best industrial standards and practices.

Vendor shall guarantee the operation of the system to be in full compliance with the Specification, including all attachments and listed Specifications, codes and standards.

The Vendor shall guarantee the mechanical and structural integrity, workmanship and the materials of construction used.

Under the warranty, the Vendor shall replace all hardware, software and subsystems that are found faulty due to defective devices, workmanship or engineering during the warranty period at no cost to the PURCHASER. The Vendor shall, if required by the PURCHASER, supply the services of an experienced technician to supervise the necessary repairs and replacements.

14.PREPARATION FOR SHIPMENT

Instruments shall be packaged separately, in the original manufacturer's boxes, to prevent damage during shipment. Each package shall be identified with purchase order number, content list and destination in a weatherproof envelope.

All openings shall be sealed. Threaded connections shall be protected with forged steel or moulded plastic screwed plugs.

All flanged openings shall be protected with wood or steel closures attached by proper bolting and sealed with a plastic compound to exclude foreign material from the interior and fully protect the flange faces.

All mechanical or machined surfaces subject to atmospheric corrosion prior to installation on site shall be treated with an easily removable rust preventative.

Văn bản này được xác thực tại https://eoffice.vietsov.com.vn với số định danh: 334/25-CV-TDH/NIPI

A desiccant shall be provided inside all enclosures to prevent moisture damage due to high humidity.

Any plant component exceeding 40 kg in weight shall be supplied with lifting lugs or eye bolts. The lugs or eye bolts should be positioned such that the component can be readily slung from a point over its center of gravity.

Văn bản này được xác thực tại https://eoffice.vietsov.com.vn với số định danh: 334/25-CV-TDH/NIPI

RESEARCH AND ENGINEERING INSTITUTE FOR OFFSHORE OIL AND GAS

PROJECT NAME : **BK-10A WELLHEAD PLATFORM**

DOCUMENT TITLE : **SPECIFICATION FOR PACKAGE EQUIPMENT INSTRUMENTATION**

DOCUMENT NO. : **BK1.BK10.BK10A-001-GE-IA2-SP-006**

PHASE : **DE**

Applied Document	VSP-NIPI-TYP-TS-IA2-SP-06	Rev.	1

			Signed by: Lê Thị Hằng Date: 20/06/2025 10:27:37 Certified by: Vietsovpetro CA CONTROLLED	Signed by: Гайнутдинов Евгений Нурлыгалиевич Date: 20.06.2025 13:44:52 Certified by: Vietsovpetro CA	Signed by: Авдеев Андрей Сергеевич Date: 21.06.2025 12:28:40 Certified by: Vietsovpetro CA
			DC LÊ THỊ HẰNG	**ENG.MGR** GAYNUTDINOV E.N.	**PRO.MGR** AVDEEV A.S.
				Signed by: Панов Александр Анатольевич Date: 20.06.2025 09:54:54 Certified by: Vietsovpetro CA	Signed by: Исатов Дмитрий Олегович Date: 20.06.2025 10:19:17 Certified by: Vietsovpetro CA
0	IFA				
REV.	**DES.**	**DATE**	**PREP** TIKHONOV A.N.	**CHK.** TIKHONOV A.N.	**DPT.MGR** ISATOV D.O.

Văn bản này được xác thực tại https://eoffice.vietsov.com.vn với số định danh: 334/25-CV-TDH/NIPI

TRACK CHANGES

No	Rev.	Content of Change	Note
1	0	Issue For Approval	

Văn bản này được xác thực tại https://eoffice.vietsov.com.vn với số định danh: 334/25-CV-TDH/NIPI

TABLE OF CONTENT

1 INTRODUCTION 4

2 ADDENDUM 5

Văn bản này được xác thực tại https://eoffice.vietsov.com.vn với số định danh: 334/25-CV-TDH/NIPI

1 INTRODUCTION

BK-10A Wellhead Platform belongs to Vietsovpetro JV. It will be located in Block 09-1, White Tiger oil field, offshore the Socialist Republic of Vietnam.

BK-10A is connected with BK-10 by a linking bridge. BK-10A is an unmanned platform with 12 slots (03 spare slots) and will be remotely controlled from the host platform BK-10 via fiber optic cable.

There will be 09 production wells on BK-10A (02 wells will be converted into water injection wells in future as planned) and 03 wells can be added in the future.

Based on the criterion of the need for production and maximizing the return on investment, BK-10A will be considered to have the minimum facilities. The full well stream of BK-10A will be gathered together with the produced fluid of BK-10 and BK-1, preliminarily separated on BK-10 and then transferred to CPP-2.

The scope of this project is detailed engineering design for the BK-10A Wellhead Platform, Linking Bridge and modification of BK-10.

Location of BK-10A and related platforms as below.

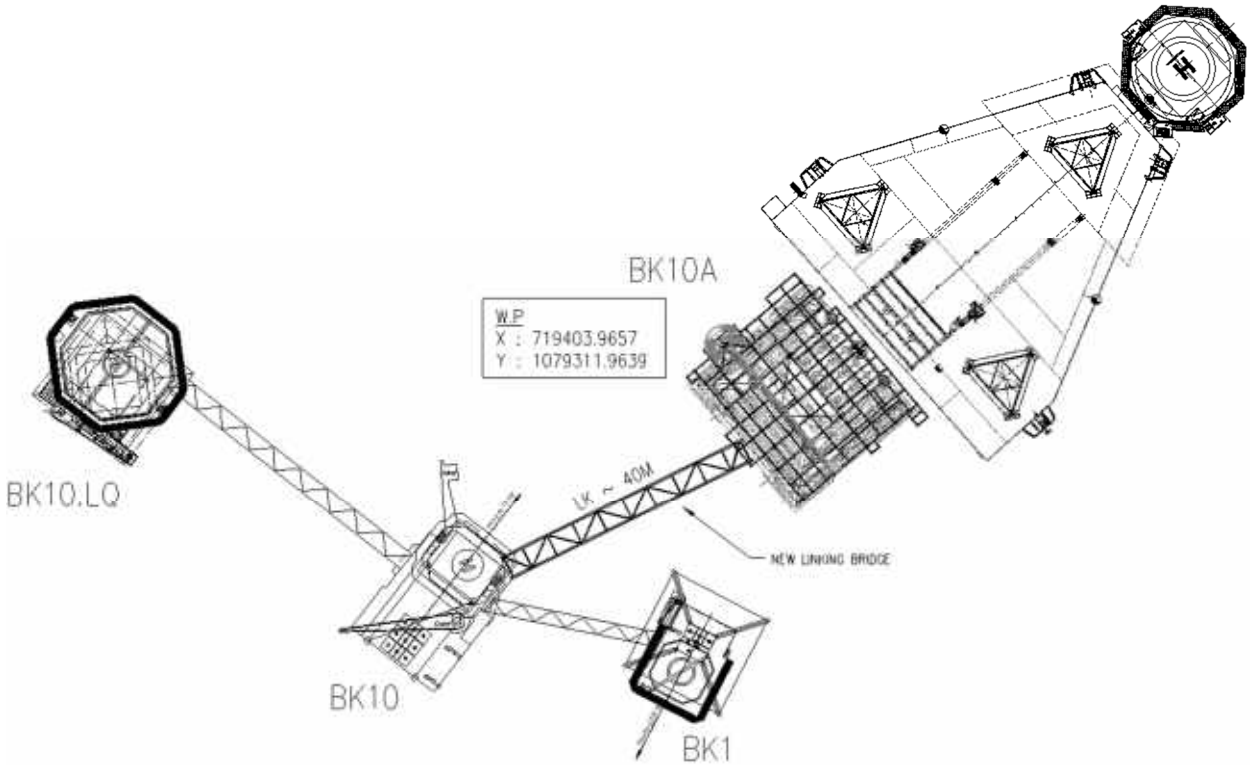

Figure 1: Location of the BK-10A Wellhead Platform and related platforms.

Văn bản này được xác thực tại https://eoffice.vietsov.com.vn với số định danh: 334/25-CV-TDH/NIPI

2 ADDENDUM

This document uses the Typical Engineering Documentation for this Project. However, some design intends or requirements may require to be revised to fit with Project's purpose. This section lists changes in the applied typical documents, originating in Typical Engineering Documentation for any reason including those indicated in Table 1. These changes are identified in this Addendum to the applied typical document, identifying the document and section affected and the required change.

VENDOR shall review the required changes in conjunction with the referenced document and project's engineering documents.

The type of modification shall be defined and indicated in subsequent text as follows:

- "ADD" - Indicates the following statement(s) is/are added to the Company referenced text.
- "DELETE" - Indicates the following statement(s) is/are deleted from the Company referenced text.
- "REPLACE WITH" - Indicates the following statement(s) is/are revision(s) to the Company referenced text.

Table – 1: List of changes

<table>
<tr><th>Section</th><th>Current Statement or Requirement</th><th>Revised to</th></tr>
<tr><td>Reference Documents</td><td>VSP-NIPI-TYP-TS-IA2-SP-01
ICSS - Functional Design Specification
VSP-NIPI-TYP-TS-IA2-SP-02
Specification for Wellhead Control Panel
VSP-NIPI-TYP-TS-IA2-SP-03
General Instrument Specification
VSP-NIPI-TYP-TS-IA2-SP-04
Specification for Shutdown, Blowdown Valve and Hand Valve with Limit Switch
VSP-NIPI-TYP-TS-IA2-SP-05
Specification for Control Valves</td><td>REPLACED WITH:
BK1.BK10.BK10A-001-GE-IA2-SP-001
ICSS - Functional Design Specification
BK1.BK10.BK10A-001-GE-IA2-SP-002
Specification for Wellhead Control Panel
BK1.BK10.BK10A-001-GE-IA2-SP-003
General Instrument Specification
BK1.BK10.BK10A-001-GE-IA2-SP-004
Specification for Shutdown, Blowdown Valve and Hand Valve with Limit Switch
BK1.BK10.BK10A-001-GE-IA2-SP-005
Specification for Control Valves</td></tr>
<tr><td>Appendix A</td><td><table><tr><th>A</th><th>Process Packages</th></tr><tr><td>1</td><td></td></tr><tr><th>B</th><th>Utility Packages</th></tr><tr><td>2</td><td></td></tr></table></td><td>REPLACED WITH:<table><tr><th>A</th><th>Process Packages</th><th>Package Type</th></tr><tr><td>1</td><td></td><td></td></tr><tr><th>B</th><th>Utility Packages</th><th></th></tr><tr><td>1</td><td>Pedestal Crane</td><td>P2</td></tr><tr><td>2</td><td>Mobile Steam Generator</td><td>P4</td></tr><tr><td>3</td><td>Chemical Injection Skid</td><td>P2</td></tr><tr><td>4</td><td>Corrosion Inhibitor Injection Skid</td><td>P1</td></tr></table></td></tr>
</table>

Văn bản này được xác thực tại https://eoffice.vietsov.com.vn với số định danh: 334/25-CV-TDH/NIPI

RESEARCH AND ENGINEERING INSTITUTE FOR OFFSHORE OIL AND GAS

AGREED BY
Deputy General Director of Vietsovpetro

Tran Xuan Hoang

23/08/2022

APPROVED BY
Chief Engineer of Vietsovpetro

Tran Van Vinh

/2022

TYPICAL ENGINEERING DOCUMENTATION

DOCUMENT TITLE **SPECIFICATION FOR PACKAGE EQUIPMENT INSTRUMENTATION**

DOCUMENT NO. : **VSP-NIPI-TYP-TS-IA2-SP-06**

CONTROLLED

AGREED:	Name	Date
Capital Construction Department	Signed by: Nguyễn Hồng Giang Date: 22/08/2022 07:26:10 Certified by: Vietsovpetro CA	
Material and Equipment Department	Signed by: Châu Ngọc Hồ Date: 19/08/2022 11:20:25 Certified by: Vietsovpetro CA	
Mechanical Electrical Division	Signed by: Trịnh Hoàng Linh Date: 19/08/2022 08:07:19 Certified by: Vietsovpetro CA	

Signed by: Đỗ Quốc Huy
Date: 16/08/2022 14:10:00
Certified by: Vietsovpetro CA

Signed by: Trần Anh Nguyên
Date: 16/08/2022 14:43:42
Certified by: Vietsovpetro CA

Signed by: Nguyễn hải Chung
Date: 16/08/2022 15:00:36
Certified by: Vietsovpetro CA

Signed by: Гайнутдинов Евгений Нурлыгалиевич
Date: 16/08/2022 15:07:23
Certified by: Vietsovpetro CA

Signed by: Trần Duy Hải
Date: 16/08/2022 15:23:16
Certified by: Vietsovpetro CA

Signed by: Bùi Trọng Hân
Date: 16/08/2022 22:13:53
Certified by: Vietsovpetro CA

REV.	DES.	DATE	PREPARED	CHECKED	DEPART. MANAGER	ENG. MANAGER	PRO. MANAGER
1	IFA	25/07/2022	T.A.NGUYEN /D.Q.HUY	N.H.CHUNG	G.E.N	T.D.HAI	B.T.HAN
0	IFA	25/10/2019	N.H.CHUNG	N.H.CHUNG	G.E.N	T.D.HAI	B.T.HAN

Văn bản này được xác thực tại https://eoffice.vietsov.com.vn với số định danh: 334/25-CV-TDH/NIPI

CHANGE LOG

REV	SECTION	PAGE	CHANGE DESCRIPTION
1	6.5	12	ADDED: • I/O modules for critical signals

REFERENCE DOCUMENTS

Number of document	Description
VSP-NIPI-TYP-TS-IA2-SP-01	ICSS - Functional Design Specification
VSP-NIPI-TYP-TS-IA2-SP-02	Specification For Wellhead Control Panel
VSP-NIPI-TYP-TS-IA2-SP-03	General Instrument Specification
VSP-NIPI-TYP-TS-IA2-SP-04	Specification for Shutdown, Blowdown Valve and Hand Valve with Limit Switch
VSP-NIPI-TYP-TS-IA2-SP-05	Specification for Control Valves

Văn bản này được xác thực tại https://eoffice.vietsov.com.vn với số định danh: 334/25-CV-TDH/NIPI

TABLE OF CONTENTS

1. INTRODUCTION 4

1.1 PURPOSE OF DOCUMENT 4
1.2 DEFINITION OF TERMS 4
1.3 ABBREVIATIONS 4

2. REFERENCES, CODES & STANDARDS 5

2.1 GENERAL 5
2.2 INTERNATIONAL CODES & STANDARDS 6

3. PACKAGE VENDOR SCOPE OF DELIVERY AND INSTRUMENT DESIGN 6

3.1 GENERAL 6
3.2 SCOPE OF WORK 6
3.3 INSTRUMENT DESIGN 7
3.4 DOCUMENTATION 7

4. PACKAGE DESCRIPTION 7

5. PACKAGE UNIT CONTROLS AND SAFEGUARDING SYSTEM PHILOSOPHIES 8

5.1 GENERAL 8
5.2 SELECTION GUIDELINES 9
5.3 LOCAL OPERATOR INTERFACE 9
5.4 INTERFACE TO PLATFORM'S ICSS 9
5.5 ALARM HANDLING AND ANNUNCIATION 10
5.6 FIRE AND GAS SYSTEM 10
5.7 INSTALLED SPARES 10

6. PROGRAMMABLE LOGIC CONTROLLER (PLC) 10

6.1 GENERAL 10
6.2 POWER SUPPLY 11
6.3 PLC HARDWARE 11
6.3.1 Main processor module 11
6.3.2 Communication module 11
6.3.3 Input and Output modules (I/O) 11
6.4 APPLICATION SOFTWARE REQUIREMENTS 12
6.5 REDUNDANCY REQUIREMENT 12

7. CONTROL PANEL REQUIREMENT 12

7.1 GENERAL 12
7.2 LCP PANEL REQUIREMENT 12
7.3 UCP CABINET REQUIREMENT 13

8. INSTRUMENT INSTALLATION 13

9. INSPECTION, CALIBRATION AND FUNCTIONAL TEST 13

9.1 SCOPE OF WORK 13
9.2 DOCUMENTATION AND TEST EQUIPMENT 14
9.3 CONTRACTOR / COMPANY'S INSPECTION REPRESENTATIVE 14
9.4 CALIBRATION PROCEDURE 14
9.5 FUNCTIONAL TESTING 14
9.6 FLUSHING AND TESTING REQUIREMENT 15

10. PACKING, SHIPPING AND REASSEMBLE 16

11. SPARE PARTS AND SPECIAL TOOLS 16

11.1 SPARE PARTS 16
11.2 SPECIAL TOOLS 16

Văn bản này được xác thực tại https://eoffice.vietsov.com.vn với số định danh: 334/25-CV-TDH/NIPI

1. INTRODUCTION

The typical engineering documentation is a set of engineering documents issued by Research and Engineering Institute (REI) that can be applied repeatly to many projects that REI involves.

The typical engineering documentation shall be agreed by related departments in Vietsovpetro and approved by Vietsovpetro, if any.

1.1 Purpose of document

This document defines the minimum requirements for design, materials, fabrication, inspection, testing, painting, preparation for shipment, and documentation for the supply of instrumentation part of Packages.

1.2 Definition of Terms

Within this document the following definitions shall apply:

COMPANY	The party which initiates the project and ultimately pays for its design and construction and owns the facilities. Here the COMPANY is Vietsovpetro JV (referred to as VSP).
CONTRACTOR	The party which carries out all or part of the design, engineering, procurement, construction and commissioning of the project.
VENDOR	The party which the order or contract of supply of the equipment/package or services is placed.
Shall	Refers to mandatory requirement
Should	Refers to a recommendation

1.3 Abbreviations

API	American Petroleum Institute
APS	Abandon Platform Shutdown
CR	Control Room
ESD	Emergency Shutdown System
F&G	Fire and Gas
FAT	Factory Acceptance test
FGS	Fire & Gas System
HC	Hydrocarbon
HSE	Health, Safety, and Environment
HMI	Human Machine Interface
HVAC	Heating Ventilation and Air Conditioning
IOM	Installation, Operation, and Maintenance
ITP	Inspection and Test Plan
I/O	Input/Output
ICS	Integrated Control System
ICSS	Integrated Control & Safety System
IEC	International Electrotechnical Commission
IR	Infra-red
IS	Intrinsically Safe

Văn bản này được xác thực tại https://eoffice.vietsov.com.vn với số định danh: 334/25-CV-TDH/NIPI

ISA	The International Society of Automation
JB	Junction Box
LCD	Liquid Crystal Display
LCP	Local Control Panel
LED	Light Emitting Diode
MODBUS	Serial Communication Protocol by Modicon
MTTR	Mean Time To Recovery
MTBF	Mean Time Between Failure
NC	Normally Close
NO	Normally Open
NDE	Non Destructive Examination
NPS	Nominal Pipe Size
OS&Y	Outside Screw and Yoke
P&ID	Piping and Instrument Diagram
PAPA	Prepare to Abandon Platform
PCB	Polychlorobiphenyls
PCS	Process control system
PVC	Polyvinylchloride
PO	Purchase Order
PLC	Programmable Logic Controller
QA/QC	Quality Assurance / Quality Control
RFI	Radio Frequency Interference
RO	Restriction orifice
RTJ	Ring Type Joint
RF	Raised Face
SAT	Site Acceptance Test
SIL	Safety Integrity Level
SIS	Safety Integrated System
SOE	Sequence of Events
SWB	Steel Wire Braid
SPIR	Spare Parts and Interchange ability Record
TFE	Tetrafluoroethylene
TPI	Third Party Inspection
UCP	Unit Control Panel
UPS	Un-interruptible Power Supply
VDU	Video Display Unit
VDRL	Vendor Data Requirements List

2. REFERENCES, CODES & STANDARDS

2.1 General

All equipment shall comply with the relevant national and international codes, standards and recommendations. The Vendor shall determine what equipment requires type approval by the local Vietnamese Authority and shall provide type approval equipment where necessary. This specification requires that the design, construction and testing of the instrument shall meet all requirements of the codes, standards and other documents listed in Section 2.2.

Văn bản này được xác thực tại https://eoffice.vietsov.com.vn với số định danh: 334/25-CV-TDH/NIPI

In general, the Instrumentation and Control systems shall be designed to conform with, but not limited to the latest editions of the following industry standards, codes, professional documents, regulations and project documents.

2.2 International Codes & Standards

Refer to the applied Codes and Standards listed in:

VSP-NIPI-TYP-TS-IA2-SP-01	ICSS - Functional Design Specification
VSP-NIPI-TYP-TS-IA2-SP-03	General Instrument Specification
VSP-NIPI-TYP-TS-IA2-SP-05	Specification for Control Valves
VSP-NIPI-TYP-TS-IA2-SP-04	Specification for Shutdown, Blowdown Valve and Hand Valve with Limit Switch

3. PACKAGE VENDOR SCOPE OF DELIVERY AND INSTRUMENT DESIGN

3.1 General

The VENDOR shall assume full responsibility for engineering, equipment selection, interface definition, purchase, installation, testing, calibration, function testing and documentation of the instrument equipment and control system for the entire package.

The VENDOR shall be responsible for providing the CONTRACTOR/ COMPANY with information necessary for integration with equipment outside the delivery, but essential for the intended performance of the package.

The VENDOR shall as minimum, submit for CONTRACTOR/ COMPANY review/approval all applicable documents for the package as listed in Appendix B.

The VENDOR shall as a minimum, perform inspection, calibration and function testing according to Section 8.0 of this specification.

It is the VENDOR's responsibility to assist the CONTRACTOR/ COMPANY in defining all relevant functions and parameters for control and monitoring via the PCS.

3.2 Scope of work

Package VENDOR scope of work shall include as a minimum:

- All inline, online, and offline instrumentation shall be fully installed complete with all impulse line tubing, pneumatic signal tubing, instrument valves, instrument manifolds, instrument supports, instrument tags and instrument labels.
- Instrument air manifold(s) c/w isolation valves shall be installed at the skid edge and fully tubed to the instrument air users on angle iron or tubing tray.
- The skid edge junction boxes shall be fully hooked to the skid Instruments and LCP, and fully function tested.
- The VENDOR shall supply all instrument equipment, junction boxes, cable gland, cabling (within the skid and panel), tubing, fittings and other items necessary for the satisfactory operation of the instrumentation and any associated control panels.
- All parts subject to moisture, fungus growth or insect attack shall be treated with a coating to ensure suitability for tropical conditions.
- Where the packaged equipment is provided with its own control and safeguarding system(s), the VENDOR is responsible for the design, engineering and safe operation of these systems. The CONTRACTOR/ COMPANY will review and approve the design for overall compliance but the

Văn bản này được xác thực tại https://eoffice.vietsov.com.vn với số định danh: 334/25-CV-TDH/NIPI

satisfactory operation and adherence to requirements remains the VENDOR's responsibility. The system shall be supplied fully assembled, wired, tested and ready for operation.

- To facilitate operation and maintenance of the facility, standardization of all instrument equipment shall be adopted. For this purpose, COMPANY Approved Vendor List shall be followed. If major technical requirements dictate the selection of manufacturer(s) not included in COMPANY's Approved Vendor List, the VENDOR shall inform the CONTRACTOR/ COMPANY of the exception in his bid. Specific details shall be given on the requirements that cannot be achieved by selection from the Approved Vendor List, and of the proposed alternative.

3.3 Instrument Design

Instrument specification and design shall comply with "VSP-NIPI-TYP-TS-IA2-SP-03_General Instrument Specification".

Design of the package shall comply with the functional requirement stated in the respective package equipment specification.

Deviations if any shall be brought to the notice of the COMPANY/CONTRACTOR for approval.

3.4 Documentation

The purpose of all drawings and documentation is to enable the equipment to be installed, tested and maintained by the COMPANY's technicians, even if they are not totally familiar with the equipment.

The Package VENDOR shall prepare instrument data sheets for all instruments in his supply in accordance with ISA 20 standard instrument data sheets which are subject to CONTRACTOR/ COMPANY's approval. Tag number for package instruments shall be allocated by CONTRACTOR/ COMPANY in accordance with the VENDOR's P&IDs.

Symbols and legend used on drawings shall be same as that used in the Project's P&IDs.

Logic diagrams shall comply with ISA 5.2 "Binary Logic Diagrams for Process Operation".

VENDOR shall provide other documents such as Instrument Index, Wiring Diagrams, Hook-Up drawings, Layouts, etc as included in Appendix B.

The Package VENDOR shall provide an Operation and Maintenance Manual for all equipment with references to tag numbers to enable COMPANY's technicians to operate and maintain the equipment in a safe and efficient manner.

VENDOR shall provide control narratives for control of the package. Emphasis shall be based on the complex control loops/ configuration that require Interlock.

VENDOR shall provide Cause and Effect Matrix and Loop Drawings for the package.

Test and Inspection plan proposed shall be submitted to CONTRACTOR / COMPANY for approval.

4. PACKAGE DESCRIPTION

The Instrumentation in Package Equipment shall be supplied and designed in one of the following configurations:

- **Package Type 1-P1**

  Instruments located in the package, connected to ICSS, monitored and controlled from ICSS. Cabling from the Instrument to the ICSS shall be by CONTRACTOR/ COMPANY without the use of Package supplied Junction Box.

- **Package Type 2-P2**

  Instruments located in the package, connected to ICSS, monitored and controlled from ICSS. VENDOR shall run the cabling from the Instruments up to junction boxes located at the edge of the package skid. Cabling from the junction box to the ICSS shall be by CONTRACTOR/ COMPANY unless otherwise

Văn bản này được xác thực tại https://eoffice.vietsov.com.vn với số định danh: 334/25-CV-TDH/NIPI

stated. Control philosophy and all documents related to design and programming works for package shall be provided by package vendor.

- **Package Type 3-P3**

  Instruments located in the package, connected, monitored and controlled by dedicated control system in a remote central location. The control panel is called Unit Control Panel (UCP). VENDOR shall provide and run all the cabling from the Instruments up to a junction boxes located at the edge of the package skid. CONTRACTOR/ COMPANY shall run the interface cables from the junction box to the UCP and from UCP to ICSS. Interface cables and suitable cable glands (both end) shall be provided by VENDOR as loose item unless otherwise specified in package's specification. The distance between UCP and ICSS shall be confirmed by COMPANY/ CONTRACTOR.

- **Package Type 4-P4**

  Instruments located in the package, connected, monitored and controlled from dedicated control system integral to the package skid. The control panel is called Local Control Panel (LCP). VENDOR shall provide and run all the cabling from the Instruments up to LCP / Skid's JBs and from the skid's JBs to LCP. CONTRACTOR/ COMPANY shall run the interface cables from the LCP to the ICSS. Interface cables and suitable cable glands (both end) shall be provided by VENDOR as loose item unless otherwise specified in package's specification. The distance between LCP and ICSS shall be confirmed by COMPANY/ CONTRACTOR.

The Instrumentation specification and design shall be in accordance to "VSP-NIPI-TYP-TS-IA2-SP-03_General Instrument Specification". Where Instrument is part of VENDOR proprietary equipment which requires the use of VENDOR standard engineering and design, VENDOR shall highlight the requirement for acceptance by COMPANY.

5. PACKAGE UNIT CONTROLS AND SAFEGUARDING SYSTEM PHILOSOPHIES

5.1 General

Where the control requirements of the packaged equipment are relatively simple, consideration shall be given to implementing these controls within the platform's PCS. In general, those requirements will be specified in the actual mechanical package specification.

Where the packaged equipment is provided with its own control and safeguarding system(s), the VENDOR is responsible for the design and safe operation of these systems. The CONTRACTOR/ COMPANY will review and approve the design for overall compliance but the satisfactory operation and adherence to requirements remains the VENDOR's responsibility.

The package process control system will perform the following functions:

- Local operator interface
- Interface to platform's ICSS. The interface shall be at sufficient level to enable the operation of the unit from the CR.
- Self-contained control and monitoring of all internal parameters.
- Self-contained protective actions and alarms

Except where specified otherwise in package specification, all controls shall be failsafe i.e. fail into alarm and shutdown.

PLC based and proprietary microprocessor based control systems shall be used for all electronic control systems unless approved otherwise by COMPANY.

Protective shutdown function shall be either wired to the main platform's SIS (Safety Integrated System) or implemented by Package's own Safeguarding System required as part of VENDOR's proprietary design. When

Văn bản này được xác thực tại https://eoffice.vietsov.com.vn với số định danh: 334/25-CV-TDH/NIPI

the package supplied with its own Safeguarding system, it is possible to combine it with the control function subject to COMPANY approval.

The Package Safeguarding system related to SIS (Safety Integrated System) shall be implemented in a PLC approved by TUV Rhienland (to IEC 61508, suitable for SIL-3 applications as minimum). This SIL requirement includes the controller, the programming software, the I/O modules and termination boards. VENDOR shall provide the relevant certificates and associated reports.

All control software shall be documented according with ANS/ISA-5.06.01. The software documentations shall be able to be used for control software definition, design, testing and validation and not require specialized knowledge of any particular engineering or computer science discipline to develop or understand.

All software used shall be handed over to the COMPANY after FAT. Third party software requires evergreen license in COMPANY'S name.

5.2 Selection Guidelines

The general platform requirements place emphasis on particular aspects of the instrument systems.

- The operator interface must be easy to use with respect to multi-skilled operators and low manning level.
- The system should be easily configurable /programmable to reduce the need for specialist staff.
- The system maintenance requirement must be low.

Due to operational requirements, VENDOR supplied systems shall be based on the following principles:

- The operator shall, via the PCS system, normally be able to monitor the operation of the package.
- The operators shall, via the PCS system, have access to the parameters necessary to perform remote start-up and shut-down of the package.

The VENDOR shall recommend a control strategy, which in his opinion best meets the CONTRACTOR/ COMPANY's objectives for standardization, easy maintenance, etc. as given above and the package specification and also meets VENDOR's detail design and package responsibility.

The control system (PLC) chosen for the package shall be as per COMPANY Approved Vendor List.

5.3 Local operator interface

The Package shall be supplied with all local operator interfaces required to safely start, stop, commission, operate and maintain the package.

Local field panels will display all pertinent information required by field operators adjacent to the package.

Package unit panels shall contain all operator interfaces necessary for independent operation and trouble shooting.

5.4 Interface to platform's ICSS

Package control systems which are totally self-contained and operated independently will be interconnected to PCS via serial link or hardwired links or combination of both. However, in case where only small amount of data is required to be transferred, hardwired links are preferred. All safeguarding signals shall be hardwired to platform SIS (Safety Integrated System).

The interface shall be at sufficient level to enable the operation of the unit from the CCR.

Where the numbers of signals are small or safety related, a hardwired interface shall be used. The signals shall be of the following types:

- Analogue (4-20mA at 24VDC)
- Volt-free contact (24VDC) for status and alarms from the package to ICSS and be powered by the LCP/UCP. Contact rating shall be 1 Amp.

Văn bản này được xác thực tại https://eoffice.vietsov.com.vn với số định danh: 334/25-CV-TDH/NIPI

- Digital output (24VDC powered, 0.5A max) directly from ICSS to the package devices.
- Relay coil (24VDC powered) for output control signals from ICSS to the packages for devices with power consumption higher than 8W 24VDC.

For equipment that operates on AC power or not on 24VDC power, VENDOR shall provide appropriate interposing relays or interface at the local panels to interface with 24VDC powered output signals from the ICSS.

MODBUS RTU RS485 or TCP/IP communications protocol shall be used for all data link interfaces between UCP/LCP and PCS. The UCP/LCP will act as slave in any communications with the PCS.

Data links shall be provided with appropriate test equipment. VENDOR offering data links will include provision for, at the COMPANYs discretion:

- An integration test at the PCS supplier's works.
- Provide facilities and assistance for the PCS supplier to attend tests.

Overrides for the purposes of testing shall be as recommended by VENDOR. In general, all I/O's shall have bypass capability for safe operation and maintenance of package unless specifically agreed by COMPANY in writing.

5.5 Alarm Handling and Annunciation

Each process trip shall have a pre-trip alarm. Alarms generated from instruments shall be provided at the panel to warn operators of potentially hazardous situations before shutdown occurs.

Package panel alarm annunciations that do not require first-up facility (e.g. pre-alarms) should have "Automatic Reset" in accordance with sequence A as detailed in ISA-S18.1. Package panel alarm annunciation groups that require first-up facility should have "Automatic Reset First Out with First Out Flashing and Reset Pushbutton with Silence Pushbutton" in accordance with sequence F3A-1 as detailed in ISA S18.1.

Alarms acknowledge and reset philosophy shall be decided during detailed engineering.

5.6 Fire and Gas System

Fire and gas devices inside package skid for package without F&G System shall be wired to platform's FGS/SIS (Safety Integrated System).

Where detectors and other equipment are installed as part of the VENDOR's scope (i.e. inside enclosures) the make and models shall be required to be in accordance with the make and models approved for the Project.

Refer individual mechanical equipment specification for Fire & Gas Detection and protection requirements.

5.7 Installed Spares

The UCP / LCP shall have minimum 20% spare prewired and tested, up to field I/O incoming cable termination blocks. In addition, 20% spare space and slots shall be provided. All spare positions in racks/slots shall be provided with cover plates. All hardware required for pre-wiring of spare shall be provided by VENDOR. All spare capacity shall be evenly distributed as spare positions over the various cabinets/equipment. Spare terminals shall be provided to terminate all cores/pairs of the field cables.

VENDOR shall also ensure that all power supplies shall be dimensioned to take the above requirements into account.

6. PROGRAMMABLE LOGIC CONTROLLER (PLC)

6.1 General

PLC shall run in a standalone mode and shall be able to operate without operator intervention under normal operating conditions. The overall availability that required to be 99.95% or better for process control.

All key operational data and alarms from equipment packages shall be displayed and recorded by the ICSS.

Văn bản này được xác thực tại https://eoffice.vietsov.com.vn với số định danh: 334/25-CV-TDH/NIPI

6.2 Power Supply

The CONTRACTOR will supply 220V A.C. UPS power supplies for the UCP via a redundant cables, further distribution shall be by VENDOR, for which the VENDOR shall provide double pole isolators within the System panel.

Redundant 220VAC/24VDC Power supply unit (PSU), with a common D.C. distribution and circuit protection network shall be provided to power up the PLC. Each PSU shall be rated at 125% maximum system load, and shall provide local and remote status and alarm facilities. Each PSU shall be of the linear type. PSU failure alarm shall be provided as part of common cabinet alarm.

Each PSU in a redundant power supply shall be rated such that all loads, including spares, can be simultaneously powered.

Diagnostics, signaling and isolation facilities shall be provided to service or replace a faulty PSU.

PSU shall be easily replaceable without disrupting the process plant.

6.3 PLC Hardware

6.3.1 Main processor module

Processor module shall be a microprocessor based controller that provides the functions required for a variety of field automation applications.

The module shall be fitted with status and diagnostic LED's (as a minimum, status and fault).

The final design should not utilize more than 50% of available memory at final commissioning.

6.3.2 Communication module

Communication module shall be automatically and permanently tested, to monitor their healthy condition. Identification and location of statuses and faults shall be automatic.

The serial communication between PLC and PCS shall be Modbus RTU RS 485 or TCP/IP, unless otherwise specified. Vendor shall provide details on Modbus address, data type and size, alarm and trip points (for analogue input points), logic active state (for discrete points), slave address, PLC details, baud rate etc at the minimum.

Communication module shall be designed for optimum data transmission speed.

6.3.3 Input and Output modules (I/O)

All input and output circuits shall be electrically isolated to prevent transients in the field wiring from affecting the internal machine circuitry (components other than I/O modules). Optical or transformer isolation is acceptable.

All input/output module electronics and channels shall include individual protecting device to prevent short circuit of the card.

Analog Input/Output modules should have HART pass-through facility to pass on health data coming from the smart field instruments to the LCP/UCP.

The system shall be designed to automatically self-test input and output cards in such a way as not to cause any process disturbance.

The I/O modules shall feature status and diagnostic LED's (as a minimum, power supply status and I/O channel status).

It must be possible to remove the I/O modules and replace them without:

- Disconnecting the field wiring from the I/O module termination assembly.
- Removing power from the PLC or any field devices.
- Disrupting the operation of the PLC in any way except for the functions associated with the module being replaced.

Văn bản này được xác thực tại https://eoffice.vietsov.com.vn với số định danh: 334/25-CV-TDH/NIPI

- Incurring any damage to any circuits.

6.4 Application software requirements

The PLC shall be supplied with a standard laptop PC complete with the operating system, antivirus and programming software for programming, commissioning, testing and maintenance. All software used shall be handed over to the COMPANY after FAT. Third party software requires evergreen license in COMPANY'S name.

Type and characteristics of the notebook shall be submitted by VENDOR at bid stage and shall be subject to COMPANY's approval.

Password access shall be provided for different using levels (configuration, programming, operation and maintenance).

6.5 Redundancy Requirement

The PLC shall be equipped with redundant components and designed such that on failure of a single module, the system or components shall be able to switch over automatically in the event of malfunction or failure of the primary unit. The transfer shall be 'bumpless" and no data acquisition shall be lost during the transfer.

The following parts of the system shall be redundant:

- Controller module
- Memory module
- Power supply module
- Communication module (as required)
- I/O modules for regulatory control
- I/O modules for critical signals 1

7. CONTROL PANEL REQUIREMENT

7.1 General

The VENDOR shall provide all necessary terminals and circuit breakers to distribute power logically within all panels in his supply. A suitably rated heavy duty, double pole, electrical isolator shall be provided for each incoming power cable (VENDOR to advise maximum cable size). Further power distribution within panels shall use Miniature circuit breakers (MCB's). For the LCP all the breakers shall be explosion proof, Ex"d" type.

Panel wiring shall be in accordance with IEEE wiring Regulations. Wiring shall be sized to suit each application with a minimum of 0.5mm2, (except for ribbon type cabling).

Wiring shall be routed in vented flame retardant plastic trunking with adequate separation and sized so that not more than 50% of the cross sectional area is filled with conductors.

For UCP, all field input cables shall be terminated to knife edge isolation terminal block. Terminal block for output field cables shall be installed with fuse. For the LCP, all terminal block shall be Fuse isolation.

Cable entry shall be from bottom only. Top entry shall not be used.

Each panel shall be provided with rigidly supported 25mm x 6mm copper earthing bars. Each bar shall have an identification label and two 10mm bolts for the earthing cables.

7.2 LCP Panel Requirement

LCP shall be constructed for outdoor application with appropriate safety / area classification and suitable for offshore marine using. SS316 and Cooper free aluminum alloy with epoxy or polyurethane coating are preferred. Material selection shall be proposed by Vendor for COMPANY approval.

Văn bản này được xác thực tại https://eoffice.vietsov.com.vn với số định danh: 334/25-CV-TDH/NIPI

The LCP at the hazardous area shall be certified suitable for Zone 1 hazardous area (Ex"de"/Ex"d"). This requirement does not include LCP at unclassified / safe area. Ingress protection class shall be IP 56 as a minimum for all the LCP.

If Ex"e" will be provided for LCP enclosure, Ex"ia" components could be provided only when Ex"d" is not available, all relative instruments inside package shall be Ex"ia" and safety barriers shall be provided in LCP. The using of Ex"ia" shall be proposed by VENDOR for COMPANY approval.

Field panel size and shape shall be as per manufacturer's standard.

Weather shields shall cover the LCP front and rear panels.

LCP shall be located at the edge of skid for easy maintenance and operation.

7.3 UCP Cabinet Requirement

UCP shall consist of one combined system and marshalling cabinet. The UCP cabinet shall be used to install input/output modules, controllers, termination of field incoming/outgoing signals, communication modules, network switches, converters and other electronic modules specific to the system architecture and the selected PLC VENDOR. The UCP shall be supplied as a completely assembled unit, pre-wired and tested to meet the operation requirements.

The cabinets shall meet the requirement of IP44 for installation inside enclosed rooms without air conditioner. Installation inside enclosed room with air conditioner shall meet IP22. UCP for high heat dissipation shall be equipped with own cooling and ventilation system.

Cabinets shall be constructed from steel plate painted, these shall be a standard rack cubicle (e.g. Rittal) or custom made cabinet or panels.

Cabinets shall generally be free standing, fully enclosed cubicle type complete with access doors. Unless otherwise stated in package's specification, base cabinet shall be 800mm x 800mm x 2000mm - maximum shipping length 1600mm. Panels shall be fitted with a plinth constructed from 100mm high mild steel channel with a minimum of 4 bolt down points, anti-vibration mountings, and prepared/finished in line with CONTRACTOR/COMPANY approved paint specification.

Access doors shall be fully gasketted and adequately stiffened to prevent distortion. Doors shall be mounted on lift-off hinges complete with lockable handles. Where doors have components mounted on them, steps must be taken to prevent damage to wiring, equipment or adjacent apparatus.

The cabinets shall be supplied as one complete unit unless it is required to be sectioned for access. Removable lifting eye bolts with local stiffening shall be provided to allow lifting and transportation of the fully assembled and wired panel, without any distortion.

Instruments on the panel front which require adjustment or which have dials that require inspection shall be fitted within a height of 1.5m from grade.

8. INSTRUMENT INSTALLATION

Instruments Installation, cable routing and tubing routing within skid limit shall be in accordance to "VSP-NIPI-TYP-TS-IA2-SP-03_General Instrument Specification".

9. INSPECTION, CALIBRATION AND FUNCTIONAL TEST

9.1 Scope of work

The VENDOR shall, before shipment visually inspect, calibrate, and functionally test all instruments which are included in the package instrumentation system. This shall apply whether instruments are mounted on the package, mounted but disconnected for shipment, or shipped loose for installation at the module construction yard or offshore.

The VENDOR shall perform the following:

Văn bản này được xác thực tại https://eoffice.vietsov.com.vn với số định danh: 334/25-CV-TDH/NIPI

- Control function testing before installation, installation checking and testing, leak testing, resistance and continuity testing and system function test where applicable.
- Complete package functional test shall be performed at VENDORs workshop, which means VENDORs/Sub-VENDORs Panel(s) and Skid(s) have to be hooked up and tested together.
- Spool pieces shall be provided for all inline instruments which will have to be removed for flushing (control valves, turbine meters, etc.).

9.2 Documentation and Test Equipment

All test shall be recorded and verified by VENDOR on suitable documents, and according to agreed procedures for inclusion in the final documentation for the package.

All test equipment shall have a valid calibration certificate, not older than one year at the time of testing.

9.3 CONTRACTOR / COMPANY's Inspection Representative

CONTRACTOR's Inspection Representatives shall be granted access to VENDOR's premises for inspection and verification of materials and work at any time. All material and test certificates shall be presented to the Inspector for verification or witnessing in accordance with VENDOR's approved Inspection Plan.

9.4 Calibration Procedure

The VENDOR shall perform a check/inspection on equipment purchased or received from sub-VENDOR and ensure that all instruments which are part of his supply, either have a calibration certificate supplied with the equipment, or are calibrated by the VENDOR witnessed by CONTRACTOR / COMPANY approved inspectors in his works.

Calibration/test certificate shall be issued for all instruments.

9.5 Functional Testing

The VENDOR must include the function testing procedure for the instrumentation system for testing of the package. This test procedure shall be prepared by the VENDOR including for control panel, field instruments, etc. and submitted to the CONTRACTOR / COMPANY for approval before testing is performed.

Before shipment, package VENDOR shall test all serial link input/ output on PLC panel side using simulating PC with software.

VENDOR shall supply test simulators to test all I/O's of the panel. Full functional test shall be carried out to simulate both normal and abnormal conditions / sequence.

All equipment failure modes shall be checked (e.g. power dips, redundancy, fail safe). The equipment radiated emission characteristics shall be within the recommendations of IEC standard.

VENDOR shall develop a control narrative for the system prior to functional test. This document shall be approved by COMPANY.

VENDOR shall participate in the panel integration test at the PCS Supplier works, for those packages that are connected via Modbus communication to PCS. VENDOR shall provide the PLC rack with CPU, communication cards, etc. fully loaded with the latest & final configuration files, software's required for this testing at PCS works. It is VENDOR's responsibility for coordinating with PCS Supplier for establishing the successful communication and testing with PCS. VENDOR shall provide all necessary parameters in the requested formats for the PCS interface.

The following tests shall be carried out to demonstrate the immunity of the equipment to radio frequency interference.

- A portable radio of frequency and electric field shall be operated at a distance of 3 feet from each equipment cabinet or console in turn.
- All doors on the equipment cabinets or consoles shall be left fully open for the duration of this test.

Văn bản này được xác thực tại https://eoffice.vietsov.com.vn với số định danh: 334/25-CV-TDH/NIPI

- During the test, the system shall be fully operational and shall be monitored for abnormal indications or spurious data.

9.6 Flushing and Testing Requirement

During flushing/clean of process and utility pipework all inline instruments including control valves and orifice plates shall be disconnected, removed and replaced by spool-pieces. Thermowells may be left in place.

In the case of pipework pressure-testing all instruments connected on small bore off-takes which are protected by a block and bleed arrangement shall be isolated and vented. Where no block and bleed is provided the instrument will be removed unless there is no danger of damage due to leakage of the isolating valve. Orifice plates and thermowells may remain in place during pressure testing.

In general, instruments which form part of the process pipework may be left in place during pressure testing but if there is a danger of damage they are to be removed. Control valves with axial stem movement shall be removed or protected by spades or spectacle blinds. Control and shutoff valves with rotary stem movement may be left in place provided the gland is rated to withstand the test pressure. All instruments forming part of the process piping shall be replaced for the reinstatement test.

After the reinstallation the VENDOR shall recheck for correct installation including checks to ensure that valves, flowmeter etc. are installed in the correct flow direction.

Instrument impulse lines shall be flushed and tested according to VENDORs test procedure, which shall be subject to CONTRACTOR / COMPANY approval. A pressure test to 1.5 times maximum process design pressure shall be performed. All the lines shall be drained with clean air or nitrogen after the test, the lines should be considered dry after blowing for 30 minutes.

Hydraulic piping and equipment shall be flushed, pressure tested and leak tested according to VENDORs procedures.

The CONTRACTOR shall certify that the system cleanliness level is in accordance with ISO 4406 Class 17/15/12 or better. The pressure test shall be performed to 1.5 times the maximum working pressure.

The flushing shall be carried out by a dedicated flushing unit with capacity of a flow rate of at least 1.5 times the service pump flow rate. The system hydraulic pump shall not be used for flushing.

Piping and equipment which have been protected with a rust inhibitor (preservation liquid) shall be ascertained for compatibility with the operating fluid. If not, the piping/equipment shall be flushed to remove the rust inhibitor.

Pneumatic signal and supply lines shall be flushed and pressure tested according to VENDORs test procedure, which shall be subjected to CONTRACTOR / COMPANY approval. A pressure test to 1.1 times maximum design pressure shall be performed in accordance with the requirements of ANSI B 31.3.

Pneumatic signal and supply lines shall be leak tested according to VENDORs test procedure, which shall be subject to CONTRACTOR / COMPANY approval. Instrument air or nitrogen to be used for the leak testing at the maximum operating pressure.

All instruments shall be calibrated, and the calibration results recorded on agreed record sheets.

All cables shall be "megger" tested for insulation, between core to core, core to screen, screen to armor, screen to ground, armor to ground.

Polarity and continuity of cores, screens and armor shall also be tested. All tests shall be documented on agreed record sheets.

The completed skid instrumentation shall be subjected to as full functional test as possible. This includes the operation of control valves, block valves and solenoid valves. Where a panel is provided as part of the package a full functional test of the panel together with the skid shall be carried out.

The Package VENDOR shall be responsible for the supply and cost of all replacement material and labor necessary to rectify faults which show up during instrument installation and testing, if such faults are due to design errors, faulty workmanship or faulty materials in the Package VENDOR supply.

Văn bản này được xác thực tại https://eoffice.vietsov.com.vn với số định danh: 334/25-CV-TDH/NIPI

10. PACKING, SHIPPING AND REASSEMBLE

The instruments on skid or packaged equipment shall be packed to avoid damage during shipment. Any instrument on skid or packaged equipment which possibly being damaged during shipment shall be disassembled and removed. The disassembled instruments shall be packed and shipped with the skid or packaged equipment. All openings to be suitably sealed.

Any electronic or electrical component in control panel which possibly being damaged during shipment shall be removed. Each such item shall be suitably packed or crated to protect them from damage during shipment. Each item, crate, box, etc. shall be identified. A complete packing list for each box or crate shall be provided.

The electronic and electrical components removed from skid mounted panel shall be shipped independently. The shipping notice shall be written on the box or crate with red letters, such as "Handle with Care", "Keep Dry", "Fragile", etc.

The control panels or junction boxes in which contain electronic or electrical components shall be put drying agent inside to protect from wet and rusty during shipment.

The instruments disassembled during shipment shall be reassembled after the skids or packaged equipment are positioned and installed on site.

The installation material such as fittings, sealant, etc., used for instrument reassemble shall be provided by skid or packaged equipment VENDOR.

It is VENDOR's responsibility to reassemble the instruments removed from skid or packaged equipment during shipment.

The instruments shall be functionally tested and recalibrated after completing the reassemble work. Any fault component or instrument found shall be replaced by the VENDOR of skid or packaged equipment.

The pneumatic tubing reassembled shall be checked for leakage.

11. SPARE PARTS AND SPECIAL TOOLS

11.1 Spare Parts

The package VENDOR shall supply commissioning and start-up spares for instrumentation as part of his scope of delivery. A complete list shall be forwarded by VENDOR for CONTRACTOR / COMPANY approval.

All unused commissioning and start-up spares left after the start-up shall be left onboard, handover with proper documents and become COMPANY's property.

11.2 Special Tools

The Package VENDOR shall supply one set of any and all special tools required for erection or maintenance of the instrument system provided (e.g. HART configurator).

Văn bản này được xác thực tại https://eoffice.vietsov.com.vn với số định danh: 334/25-CV-TDH/NIPI

APPENDIX A

Detailed Package type of this project shall be specified later for each Project.

No.	Package Description	Package Type
A	**Process Packages**	
B	**Utility Packages**	

Văn bản này được xác thực tại https://eoffice.vietsov.com.vn với số định danh: 334/25-CV-TDH/NIPI

APPENDIX B

Documentation for Instrument for Package Equipment shall be minimum as follow:

DOCUMENT DESCRIPTION	APPLICABLE FOR PACKAGE	APPROVAL/ INFOR.
A. General Documentation		
1. Overall schedule	ALL	Approval
2. P&ID	ALL	Approval
3. Instrument list	ALL	Approval
4. I/O list	P3, P4	Approval
5. Instrument Data sheet	ALL	Approval
6. Interconnection Diagram	P2, P3, P4	Approval
7. Tubing layout and tubing routing	P3, P4	Approval
8. Cable routing and cable tray layout	P3, P4	Approval
9. Instrumentation Loop wiring diagram	P3, P4	Approval
10. Instrument Calculation Sheets	ALL	Approval
11. Calculation sheet for IS loop (if required)	ALL	Approval
12. System Architecture (showing interconnection)	P3, P4	Approval
13. Control and Safety Systems Description	P3, P4	Approval
14. Operating principle and Functional Design Specification	ALL	Infor.
15. Control, logic and sequence diagram, cause and effect chart	ALL	Approval
16. Instrument card I/O assignment	P3, P4	Approval
17. Calculation Sheets of network and controller load	P3, P4	Infor.
18. Software specification, configuration documentation	P3, P4	Infor.
19. Software Database Exchange Table	P3, P4	Infor.
20. Power supply and Instrument air consumption	ALL	Infor.
21. CPU heat dissipation	P3, P4	Infor.
22. SIL Data	ALL	Infor.
B. Operation and Maintenance Documentation		
23. Operating Manual	ALL	Infor.
24. HMI Graphic Display, Report Printouts	P3, P4	Infor.
25. Spare part list (for start-up and for 2 years of normal use)	ALL	Infor.
26. Special Tools List	ALL	Infor.
C. Test Procedure		
27. Performance and Test Procedure	ALL	Infor.

Văn bản này được xác thực tại https://eoffice.vietsov.com.vn với số định danh: 334/25-CV-TDH/NIPI

DOCUMENT DESCRIPTION	APPLICABLE FOR PACKAGE	APPROVAL/ INFOR.
28. Hydro test Procedures	ALL	Infor.
29. Performance Test Reports	ALL	Infor.
30. Surface Preparation and Paint System Specification	ALL	Infor.
31. Commissioning and Site Acceptance Test Procedures	ALL	Infor.
32. Factory Acceptance Test Procedure (FAT, IFAT, SAT)	ALL	Infor.
33. Preservation and Storage Procedure	ALL	Infor.
34. Welding Procedures & Qualification Test Reports	ALL	Infor.
35. NDT Procedures	ALL	Infor.
D. QA/Certification		
36. QA Accreditation Certification	ALL	Infor.
37. Contract Quality Plan	ALL	Infor.
38. Inspection and Test Plan	ALL	Approval
39. Statement of Code Compliance	ALL	Infor.
40. Approval of Relevant Authorities	ALL	Infor.
41. Inspection and Test Reports	ALL	Approval
42. Material Certification	ALL	Infor.
43. Hazardous Area Electrical Equipment Certification	ALL	Infor.
44. Electrical Type Test Certificates	ALL	Approval
45. Post Weld Heat Treatment Records	ALL	Approval
46. Hydro test Reports	ALL	Infor.
47. NDT Reports	ALL	Infor.
48. Performance Curves and Data (ANSI and ASME)	ALL	Approval
49. FAT, IFAT, SAT Reports (performance, leak and functional systems tests)	ALL	Approval
50. Commissioning and Site Acceptance Test Results	ALL	Approval
51. Noise Test Data	ALL	Infor.

NOTE:

Other documents may be required as detailed in package specifications and/or relevant codes and standards.

Văn bản này được xác thực tại https://eoffice.vietsov.com.vn với số định danh: 334/25-CV-TDH/NIPI

RESEARCH AND ENGINEERING INSTITUTE FOR OFFSHORE OIL AND GAS

PROJECT NAME : BK-10A WELLHEAD PLATFORM

DOCUMENT TITLE : TECHNICAL SPECIFICATION FOR PAINTING

DOCUMENT NO. : BK1.BK10.BK10A-001-GE-AC7-SP-002

PHASE : DE

Applied Document			VSP-NIPI-TYP-GE-AC7-SP-10		Rev.	1
			Signed by: Lê Thị Hằng Date: 30/06/2025 10:44:15 Certified by: Vietsovpetro CA	Signed by: Гайнутдинов Евгений Нурлыгалиевич Date: 30.06.2025 12:15:48 Certified by: Vietsovpetro CA	Signed by: Авдеев Андрей Сергеевич Date: 30.06.2025 12:18:57 Certified by: Vietsovpetro CA	
			DC: L.T.HANG	**ENG.MGR: GAYNUTDINOV E.N.**	**PRO.MGR: AVDEEV A.S.**	
0	IFA	26.06.25	Signed by: Đặng Thế Anh Date: 28/06/2025 23:29:11 Certified by: Vietsovpetro CA	Signed by: Nhâm Điện Biên Date: 29/06/2025 10:28:06 Certified by: Vietsovpetro CA	Signed by: Nguyễn Văn Dũng Date: 30/06/2025 09:35:21 Certified by: Vietsovpetro CA	
REV.	**DES.**	**DATE**	**PREPARED: D.T.ANH**	**CHECKED: N.D.BIEN**	**DEPT.MGR: N.V.DUNG**	

CONTROLLED

Văn bản này được xác thực tại https://eoffice.vietsov.com.vn với số định danh: 415/25-BB-PCAM/NIPI

TRACK CHANGES

No	Rev.	Content of Change	Note
1	0	Issued for Approval	

Văn bản này được xác thực tại https://eoffice.vietsov.com.vn với số định danh: 415/25-BB-PCAM/NIPI

TABLE OF CONTENTS

1 INTRODUCTION 4

2 ADDENDUM 4

Văn bản này được xác thực tại https://eoffice.vietsov.com.vn với số định danh: 415/25-BB-PCAM/NIPI

1. INTRODUCTION

BK-10A Wellhead Platform belongs to Vietsovpetro JV. It will be located in Block 09-1, White Tiger oil field, offshore the Socialist Republic of Vietnam.

BK-10A is connected with BK-10 by a linking bridge. BK-10A is an unmanned platform with 12 slots (03 spare slots) and will be remotely controlled from the host platform BK-10 via fiber optic cable.

There will be 09 production wells on BK-10A (02 wells will be converted into water injection wells in future as planned) and 03 wells can be added in the future.

Based on the criterion of the need for production and maximizing the return on investment, BK-10A will be considered to have the minimum facilities. The full well stream of BK-10A will be gathered together with the produced fluid of BK-10 and BK-1, preliminarily separated on BK-10 and then transferred to CPP-2.
The scope of this project is detailed engineering design for the BK-10A Wellhead Platform, Linking Bridge and modification of BK-10.

Location of BK-10A and related platforms as below.

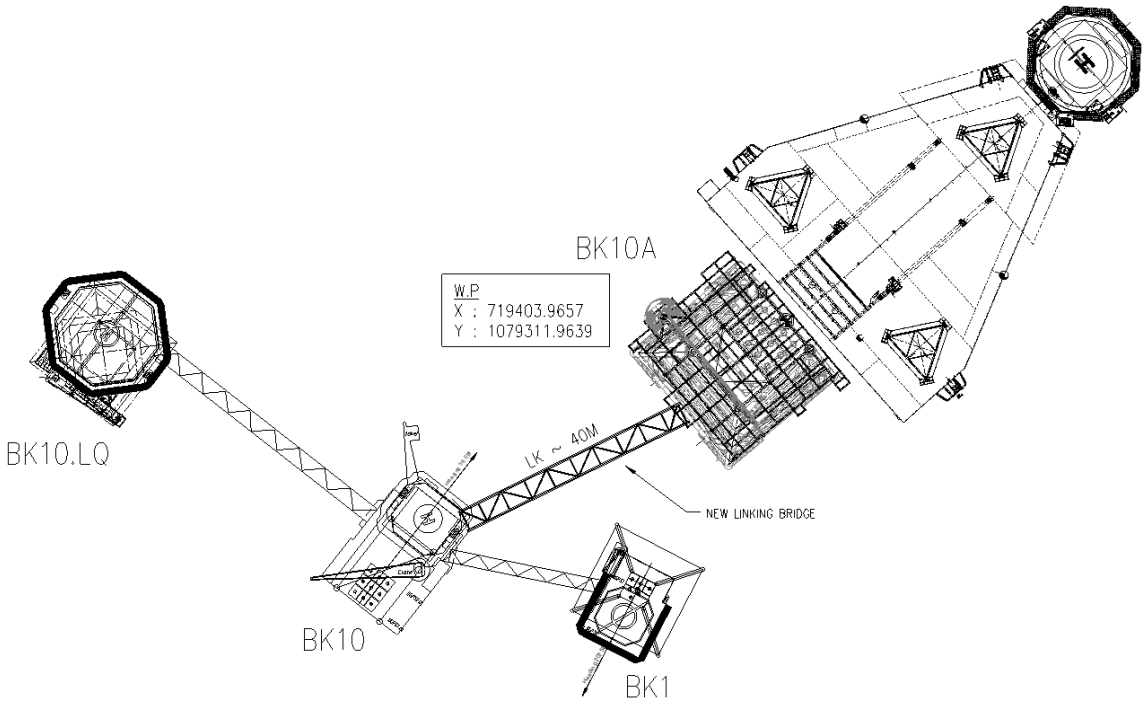

Figure 1: Location of the BK-10A Wellhead Platform and related platforms

2. ADDENDUM

This document uses the Typical Engineering Documentation for this Project. However, some design intends or requirements may require to be revised to fit with Project's purpose. This section lists changes in the applied typical documents, originating in Typical Engineering Documentation for any reason including those indicated in Table 1. These changes are identified in this Addendum to the applied

Văn bản này được xác thực tại https://eoffice.vietsov.com.vn với số định danh: 415/25-BB-PCAM/NIPI

typical document, identifying the document and section affected and the required change.

VENDOR shall review the required changes in conjunction with the referenced document and project's engineering documents.

The type of modification shall be defined and indicated in subsequent text as follows:

- ✓ "ADD" - Indicates the following statement(s) is/are added to the Company referenced text.
- ✓ "DELETE" - Indicates the following statement(s) is/are deleted from the Company referenced text.
- ✓ "REPLACE WITH" - Indicates the following statement(s) is/are revision(s) to the Company referenced text.

Section	Current Statement or Requirement	Revised to

Note:
No changes need to be made

Văn bản này được xác thực tại https://eoffice.vietsov.com.vn với số định danh: 415/25-BB-PCAM/NIPI

VIETSOVPETRO

RESEARCH AND ENGINEERING INSTITUTE FOR OFFSHORE OIL AND GAS

VIETSOVPETRO
RESEARCH & ENGINEERING INSTITUTE

AGREED BY
Deputy General Director of Vietsovpetro

Tran Xuan Hoang
16 / 04 /2024

APPROVED BY
Chief Engineer of Vietsovpetro

LIÊN DOANH VIỆT-NGA VIETSOVPETRO

Le Viet Dzung
____/____/2024

TYPICAL ENGINEERING DOCUMENTATION

DOCUMENT TITLE : **PAINTING SPECIFICATION FOR PLATFORM AND PIPELINE**

DOCUMENT No. : **VSP-NIPI-TYP-GE-AC7-SP-10**

CONTROLLED

AGREED	SIGNATURE	
CAPITAL CONTRUCTION DEPT., VSP	Signed by: Phạm Văn Quân Date: 10/04/2024 17:09:49 Certified by: Vietsovpetro CA	Signed by: Đỗ Hồng Sơn Date: 11/04/2024 19:54:57 Certified by: Vietsovpetro CA
OIL & GAS PRODUCTION ENTERPRISE, VSP	Signed by: Phạm Khắc Dũng Date: 10/04/2024 11:18:52 Certified by: Vietsovpetro CA	
OFFSHORE CONSTRUCTION DIVISION	Signed by: Đinh Xuân Trường Date: 10/04/2024 14:32:56 Certified by: Vietsovpetro CA	Signed by: Phạm Thanh Bình Date: 11/04/2024 15:29:38 Certified by: Vietsovpetro CA

REV.	DES.	DATE	PREPARED	CHECKED	DEPT.MGR
			Signed by: Lê Thị Hằng Date: 11/04/2024 09:10:35 Certified by: Vietsovpetro CA	Signed by: Bùi Hồng Dương Date: 11/04/2024 10:06:48 Certified by: Vietsovpetro CA	Signed by: Trần Duy Hải Date: 11/04/2024 14:13:48 Certified by: Vietsovpetro CA
			DC	ENG.MGR	PRO. MGR
1	IFA	08.04.24	Signed by: Nhâm Điện Biên Date: 10/04/2024 11:13:22 Certified by: Vietsovpetro CA	Signed by: Савельев Вадим Владимирович Date: 10.04.2024 11:17:02 Certified by: Vietsovpetro CA	Signed by: Nguyễn Văn Dũng Date: 10/04/2024 11:31:34 Certified by: Vietsovpetro CA
0	IFA	10.08.22			

Văn bản này được xác thực tại https://eoffice.vietsov.com.vn với số định danh: 188/24-CV-PCAM/NIPI
Văn bản này được xác thực tại https://eoffice.vietsov.com.vn với số định danh: 415/25-BB-PCAM/NIPI

Change Log

REV	SECTION	PAGE	CHANGE DESCRIPTION
1	6.1	-	Update application range of coating system: No.1A, 2A, 7A, 8A, 14A, 16A, 17A, 20A, 21A
			Delete coating systems: - 12A (merged into coating system No.7A) - 15A (merged into coating system No.8A) - 23A - 24A
	7	26	Update the section "Technological procedure"
	9.11	36	Update the chloride content in according to the practical condition at the site
	General	-	Deleted section 6.2, 7.2 to performe in the document "VSP-NIPI-TYP-GE-AC7-SP-12)
	Section 13	40	Add color codes for Xmas-tree, safety valves, actuator of SDV

Reference Documents

Văn bản này được xác thực tại https://eoffice.vietsov.com.vn với số định danh: 435/25-BB-PCAM/NIPI

TABLE OF CONTENTS

1 GENERAL 6
1.1 Introduce 6
1.2 Purpose and scope of document 6
1.3 Definitions 6
1.4 Units 6
1.5 Language 6
1.6 Abbreviation 6
2 CODES AND STANDARDS 7
3 TECHNICAL REQUIREMENTS 8
3.1 Environmental conditions 8
3.2 Painting and coating scope 8
3.2.1 Items to be painted 8
3.2.2 Items not to be painted 9
3.3 Proposal 9
3.4 Coating materials 9
3.5 Application conditions 10
4 SURFACE PREPARATION 10
4.1 General 10
4.2 Surface Preparation by abrasive blasting 11
4.2.1 Materials and conditions for abrasive blasting 12
4.2.2 Abrasive blasting 13
4.3 Surface Preparation by Mechanical Power Tools 13
5 PAINT APPLICATION 13
5.1 General coating application 13
5.2 Spray application 14
5.3 Brush application 15
5.4 Touch-up and repairs 15
5.5 Drying of coated surfaces 16
5.6 Galvanizing surface 16
6 COATING SYSTEMS 16
6.1 Coating system for new building and modification 16
6.1.1 Coating system №1A 17
6.1.2 Coating system №2A 17
6.1.3 Coating system №3A 17
6.1.4 Coating system №4A 18

Văn bản này được xác thực tại https://eoffice.vietsov.com.vn với số định danh: 188/24-CV-PCAM/NIPI
Văn bản này được xác thực tại https://eoffice.vietsov.com.vn với số định danh: 415/25-BB-PCAM/NIPI

6.1.5 Coating system №5A 18
6.1.6 Coating system №6A 18
6.1.7 Coating system №7A 19
6.1.8 Coating system №8A 19
6.1.9 Coating system №9A 20
6.1.10 Coating system №10A 21
6.1.11 Coating system №11A 21
6.1.12 Coating system №12A 21
6.1.13 Coating system №13A 21
6.1.14 Coating system №14A 22
6.1.15 Coating system №15A 22
6.1.16 Coating system №16A 23
6.1.17 Coating system №17A 23
6.1.18 Coating system №18A 23
6.1.19 Coating system №19A 24
6.1.20 Coating system №20A 24
6.1.21 Coating system №21A 24
6.1.22 Coating system №22A 25
6.1.23 Coating system №23A 25
6.1.24 Coating system №24A 25
6.2 Coating systems for restoration the existing painting systems 25
7 TECHNOLOGICAL PROCEDURES 26
7.1 For new building and modification 26
7.2 For restoration the existing painting coatings 33
8 WORKMANSHIP 33
9 INSPECTION / TESTING AND ACCEPTANCE CRITERIA 34
9.1 Inspection equipment used for inspection 34
9.2 Ambient atmospheric and surface temperature conditions 34
9.3 Surface preparation quality 34
9.4 Assessment of dust on the cleaned surface 34
9.5 Contamination chlorides test 34
9.6 Wet film thickness measurement 35
9.7 Dry film thickness measurement 35
9.8 Adhesion strength test 35
9.9 Cross-cut test for Adhesion 35
9.10 Holiday test 35

Văn bản này được xác thực tại https://eoffice.vietsov.com.vn với số định danh: 188/24-CV-PCAM/NIPI
Văn bản này được xác thực tại https://eoffice.vietsov.com.vn với số định danh: 415/25-BB-PCAM/NIPI

9.11	Acceptance Criteria	36
10	TEST PLAN	36
11	HEALTHS AND SAFETY	37
11.1	General	37
11.2	Handling of chemicals	38
11.3	Spray and blasting operations	38
11.4	Pressure equipment	39
11.5	Earthling connection	39
11.6	Breathing Apparatus	39
12	HANDLING AND SHIPPING OF FINISHED PRODUCT	39
13	COLOR CODE	39
14	MARKING FOR PIPING SYSTEMS	40

Văn bản này được xác thực tại https://eoffice.vietsov.com.vn với số định danh: 188/24-CV-PCAM/NIPI
Văn bản này được xác thực tại https://eoffice.vietsov.com.vn với số định danh: 415/25-BB-PCAM/NIPI

1 GENERAL

1.1 Introduce

The typical engineering documentation is a set of engineering documents issued by Research and Engineering Institute (REI) that can be applied repeatedly to many projects that REI involves.

The typical engineering documentation shall be agreed upon by related departments in Vietsovpetro and approved by Vietsovpetro, if any.

1.2 Purpose and scope of document

This Specification covers the minimum technical requirements for the paint application, coating systems and painting technological procedures for new projects to use for items such as: metal structures, piping systems, equipment, wellhead, facilities of topside, jacket, conductors, risers, pipelines, etc. on the new building platform of Vietsovpetro J.V. on offshore Vietnam.

This Specification also provides coating systems and corresponding painting technological procedures that can be used for painting application to metal structures, piping systems, equipment, wellhead, facilities of topside, jacket, conductors, risers, pipelines, etc.

1.3 Definitions

PROJECT NAME:	Typical engineering documentation.
DOCUMENT TITLE:	Painting specification for platform and pipeline.
DOCUMENT NO.:	VSP-NIPI-TYP-GE-AC7-SP-10.
COMPANY:	Vietsovpetro (Referred to as VSP).
DESIGNER:	The party which carries out all or part of the design, engineering, procurement, construction and commissioning of the project. Here the DESIGNER is a joined Team between Research and Engineering Institute (R&EI), a subsidiary of VSP, and an outside contractor.
MANUFACTURER/ VENDOR:	The party on which the order or contract for supply of painting material.
CONTRACTOR:	The party engaged to complete the fabrication portion of the Project works.

1.4 Units

The design shall be performed using the SI System units.

1.5 Language

All technical documentation is to be in the English language.

1.6 Abbreviation

VSP:	Joint Venture Vietsovpetro
REI	Research and Engineering Institute
BS:	British Standard
NACE	National Association of Corrosion Engineers
ISO:	International Organization for Standardization

Văn bản này được xác thực tại https://eoffice.vietsov.com.vn với số định danh: 188/24-CV-PCAM/NIPI
Văn bản này được xác thực tại https://eoffice.vietsov.com.vn với số định danh: 415/25-BB-PCAM/NIPI

ASTM:	American Society of Testing and Materials
HSE:	Health, Safety and Environment.
VOC:	Volatile Organic Compound.
WFT:	Wet Film Thickness.
DFT:	Dry Film Thickness.
OSHA:	Occupational Safety and Health Administration.

2 CODES AND STANDARDS

The latest editions of all applicable codes, specifications, and references shall define the minimum requirements applicable to the subject work and no statement contained in this specification shall construed as limiting the work to such minimum requirements.

Wherever conflicts or omissions between codes, specifications, and contracts occur, the most onerous condition shall apply. The contractor is responsible for reviewing the list below and informing the Client of any omission. All conflicts shall be formally brought to the attention of the Client.

The surface preparation, coating application, quality coat material, and qualification of the applied coating shall comply with the requirements as set out in the following international standards and specifications of coat manufacturer(s).

ASTM D 4940:	Standard test method for conduct metric analysis of water-soluble ionic contamination of blasting abrasives.
ASTM A-385:	Standard Practice for Providing High-Quality Zinc Coatings (Hot-Dip).
ASTM A-123:	Standard Specification for Zinc (Hot-Dip Galvanized) Coatings on Iron and Steel Products.
ASTM D3359:	Standard Test Methods for Measuring Adhesion by Tape Test.
ASTM D5162:	Standard Practice for Discontinuity (Holiday) Testing of Nonconductive Protective Coating on Metallic Substrates.
ASTM D4752:	Standard Practice for Measuring MEK Resistance of Ethyl Silicate (Inorganic) Zinc-Rich Primers by Solvent Rub.
ASTM D 4541:	Standard Test Method for Pull-Off Strength of Coatings Using Portable Adhesion Testers
ASTM D4285:	Standard Test Method for Indicating Oil or Water in Compressed Air
ASME A13.1:	Scheme for the Identification of Piping Systems.
ISO 2409:	Paints and Varnishes, Cross - cut test.
ISO 4628:	Evaluation of paint and varnish defects. Designation of intensity, quantity and size of common types of defects - (Parts 1; 2; 3; 4; 5; 6).
ISO 1514:	Paints and varnishes. Standard panels for testing
ISO 8501:	Preparation of steel substrates before application of paints and related products. Visual assessment of surface cleanliness - (Parts 1; 2; 3).
ISO 8502:	Preparation of steel substrates before application of paints and related products. Tests for the assessment of surface cleanliness - (Parts 1; 2; 3; 4; 6; 9).

Văn bản này được xác thực tại https://eoffice.vietsov.com.vn với số định danh: 188/24-CV-PCAM/NIPI

Văn bản này được xác thực tại https://eoffice.vietsov.com.vn với số định danh: 415/25-BB-PCAM/NIPI

ISO 8503:	Preparation of steel substrates before application of paints and related products. Surface profile of abrasive blast-cleaned steel - (Parts 1; 2; 3; 4).
ISO 21457 2010:	Material selection and corrosion control for oil and gas production systems.
ISO 8504:	Preparation of steel substrates before application of paints and related products. Methods for surface preparation - (Parts 1; 2; 3).
ISO 12944:	Paints and varnishes - Corrosion protection of steel structures by paint systems - (Parts 1; 2; 3; 4; 7; 8).
ISO 16276:	Corrosion protection of steel structures by protective paint systems - Assessment of, and acceptance criteria for, the adhesion/cohesion (fracture strength) of a coating - (Parts 1; 2).
ISO 19840:	Paints and varnishes. Corrosion protection of steel structures by protective paint systems. Measurement of, and acceptance criteria for, the thickness of dry films on rough surfaces.
ISO 20340:	Paints and varnishes - Performance requirements for protective paint systems for offshore and related structures.
ISO 7724-1 to 3	Paints and varnishes. Determination of color and color difference
NACE SP0188:	Discontinuity (Holiday) Testing of New Protective Coatings on Conductive Substrates.
SSPC-SP 16	Brush-off Blast Cleaning of Coated and Uncoated Galvanized Steel, Stainless Steels, and Non-Ferrous Metals
NORSOK M-501:	Surface preparation and protective coating.
SSPC SP-1:	Solvent cleaning.
SSPC SP-2:	Hand tool cleaning.
SSPC SP-3:	Power tool cleaning.
SSPC SP-5:	White metal blast cleaning.
ISO 9000:	Quality management systems.

3 TECHNICAL REQUIREMENTS

3.1 Environmental conditions

Items that have had paint and protective coatings applied may be installed either outdoors in an unprotected area on an offshore platform or indoors. The paint and protective coatings shall be suitable for the environmental conditions specified for such installations in the Project Documents, and the specific details for the item being painted and coated.

3.2 Painting and coating scope

3.2.1 Items to be painted

Offshore production facilities to be protected from corrosion with coatings covered by this specification include all equipment, piping systems, vessels, tanks, steel structures of platform and jacket, etc.

Stainless steels shall be painted when requested in the present specification. Only piping, pipelines, and vessels, or other pressure-containing equipment are concerned. The followings shall apply:

Văn bản này được xác thực tại https://eoffice.vietsov.com.vn với số định danh: 188/24-CV-PCAM/NIPI

Văn bản này được xác thực tại https://eoffice.vietsov.com.vn với số định danh: 415/25-BB-PCAM/NIPI

Stainless steel type	Coating requirement
Austenitic Stainless steel SS316/316L	Coated only if T > 60°C
Duplex Stainless steel 22%Cr DSS	Coated only if T > 100°C
Super duplex Stainless steel 25%Cr DSS	Coated only if T > 110°C
Stainless steel with thermal insulation	Coated

Zinc containing paints shall be prohibited on stainless steel. All stainless steel shall be painted on areas in contact with carbon steel piping supports.

3.2.2 Items not to be painted

The following surfaces and items shall not be coated:

- Nonmetallic surfaces or metallic surfaces are coated with plastic, resin, etc.
- Inside pipe.
- Rubber hoses, belts, flexible braided connectors.
- Machined surfaces.
- Nameplates, tubes, fittings, gauges, valve made from stainless steel.
- Conduits.
- Control panel.
- Motor shafts.

3.3 Proposal

The painting requirements will be defined in the relevant Project Specification. However, it shall include as a minimum the following descriptive for each coating material:

- Coating manufacturer's name and address.
- Complete generic description.
- Trade name and ordering number.
- Percent zinc content by weight for primer coats when required and percent non-volatile solids content by volume for intermediate and finish coats.
- The proposal shall include the coating Manufacturer's standard product datasheets for each coating material.

3.4 Coating materials

Coating and other consumable materials shall be new. Materials shall be supplied unopened in the coating manufacturer's containers. The unopened containers shall be clearly identified. Labels and tags shall be intact and no coating shall be used after the manufacturer's recommended shelf life has expired.

Mixing of different coating materials is not permitted whether or not from the same coating manufacturer.

Coating material shall not be mixed or kept in suspension by using a bubbling air stream. If settling has occurred it must be remixed immediately before using. No thinner shall be added unless necessary for proper application. Type of thinner shall comply with the manufacturer's instructions.

Materials shall not be left in a spray pot longer than the coating manufacturer recommends. If this limit is reached, the pot shall be emptied and cleaned, the materials destroyed, and the new material mixed.

Văn bản này được xác thực tại https://eoffice.vietsov.com.vn với số định danh: 188/24-CV-PCAM/NIPI
Văn bản này được xác thực tại https://eoffice.vietsov.com.vn với số định danh: 415/25-BB-PCAM/NIPI

The products of only a single coating manufacturer shall be used for each complete coating system discussed in this specification. The use of different coating manufacturer's products for successive coats on a single surface, or piece of equipment, is not permitted.

Thinning of coating materials is not allowed except when specifically called for in the coating manufacturer's recommendations. The procedure and limits for thinning shall be in accordance with the coating manufacturer's recommendations.

At least two samples shall be taken from each batch of product to test before painting application work commences. The COMPANY may request test panel on these samples. The CONTRACTOR must conduct quality testing on the product during construction or before the end of the project.

Successive coats shall be of a different color or tint to provide contrast so that incomplete coverage can be detected.

Unless otherwise specified, the Contractor shall comply with the finish coat color schedule.

3.5 Application conditions

Coatings shall be applied under the environmental conditions established by the Coating Manufacturer. No coating shall be applied:

- On wet surfaces.
- When the relative humidity is more than 85%.
- When the surface temperature is less than 3°C above the dew point.
- When the wind speed exceeds 7 m/s.
- When surface temperatures are more than 50°C or temperature recommended by the Coating manufacturer.

Outdoor surface preparation and coating shall be conducted during daylight hours. Indoor painting is allowed 24 hours a day in a well-lit building if the environmental conditions as described are met inside the building at all times during preparation, painting, and curing.

The Contractor's work procedures, material handling, and waste disposal methods shall include any additional precautions established by the COMPANY Representative to prevent the release of pollutants to the surrounding environment.

Before painting application works commences, the Contractor shall verify that environmental conditions are met application conditions on a daily report.

4 SURFACE PREPARATION

4.1 General

The Contractor shall be responsible for the cost of surface preparation, removal of all unsatisfactory coating, and application of the coating or system in accordance with the requirement of this Specification.

The Contractor shall provide skilled, experienced personnel to carry out all work and shall provide competent and qualified supervision and inspection services to ensure that the quality of painting works met with requirements of this Specification as well as complied with the quality policy of COMPANY.

For equipment skids, surface preparation for coating application will be only carried out after all structural, mechanical, piping, and welding works have been completed on the equipment.

Abrasive blast cleaning shall be the preferred method of surface preparation for carbon steel and shall be completed, as a minimum, to comply with ISO 8501-1, SSPC-SP-10, or equivalent one at the time of coating.

Văn bản này được xác thực tại https://eoffice.vietsov.com.vn với số định danh: 188/24-CV-PCAM/NIPI
Văn bản này được xác thực tại https://eoffice.vietsov.com.vn với số định danh: 415/25-BB-PCAM/NIPI

The surface profile shall be assessed by a profile comparator or replica tape in accordance with ISO 8503. This assessment shall be carried out at random locations over the prepared surface to provide an accurate assessment of the surface profile.

Surface preparation, including abrasive blasting, shall not be carried out in the areas where:

- The coating is being applied.
- The coating has not dried or cured.
- The coated surfaces may be contaminated with the residue of the surface treatment process.

The preparation can affect the open machinery.

4.2 Surface Preparation by abrasive blasting

Prior to abrasive blasting all welded seams, fillets, corners, sharp edges of the surface to be coated shall be rounded as defined in ISO 8501-3 (minimum radius > 2 mm). Welds must be free of pinholes and all weld spatters are to be removed prior to blasting.

Hard surface layers (e.g., resulting from flame cutting) shall be removed by grinding prior to blast cleaning.

All machined parts shall be cleaned with a solvent liquid suitable to remove any machining fluids.

Before and after blasting, all welds shall be closely inspected for the presence of welding flux and spatter, slivers, inclusions, lamination, scabs and underlying mill scale. Imperfections shall be mechanically removed and the immediate area re-blasted.

All welds shall be inspected and, if necessary, repaired prior to final blast cleaning of the area. Surface pores, cavities etc. shall be removed by suitable dressing or weld repair.

The surfaces shall be free from any foreign matter such as weld flux, residue, slivers, oil, grease, salt etc. prior to blast cleaning. Any Oil, grease, wax, dirt, and other foreign matter shall be removed in accordance with ISO 12944-4 or SSPC-SP-1.

Coated surfaces contaminated with abrasive or the residues of surface preparation operation shall be deemed unacceptable and shall be cleaned back to bare metal and re-treated to conform to the requirements of this Specification. All repair work shall be at the CONTRACTOR's expense.

Refreshing of previously coated materials shall be necessary only if the coating has been damaged.

Prior to the application of any protective coating, all damage to previously applied coatings shall be repaired. Damaged and loosely adhering coating(s) shall be removed, the area cleaned, edges of coating breaks feathered, and designated coat(s) reapplied.

The CONTRACTOR shall notify the COMPANY Representative immediately of any damaged galvanized surfaces. With COMPANY approval, the Contractor shall repair the damaged surfaces by:

- Solvent cleaning.
- Treating with a 10% by volume phosphoric acid wash or a vinyl butyral wash primer, or brush blasting.
- Applying a coat of the zinc rich primer suitable for galvanizing repair.

Immediately prior to any coating application, environmental conditions shall be checked to ensure the environmental conditions are within the limits established by the coating manufacturer and as stated in section 3.5.

Văn bản này được xác thực tại https://eoffice.vietsov.com.vn với số định danh: 188/24-CV-PCAM/NIPI
Văn bản này được xác thực tại https://eoffice.vietsov.com.vn với số định danh: 415/25-BB-PCAM/NIPI

Prior to abrasive blasting, working parts of machinery, valves, instruments, glass faces of gauges, light fittings, control panels and consoles and surfaces that are not to be coated, etc. shall be properly protected (shielded) against damage during abrasive blasting and form the ingress of blasting abrasives and residue, and from paint overspray.

Cloth, cloth tape, paper secured by tape, and/or grease protection are preferred for shielding. Shielding materials shall not be applied directly to the protected surface. After coating application finished, all such protection shall be removed and the underlying surface restored to the original condition.

Openings in vessels, piping, and other appurtenances shall be properly protected against entry of abrasive material.

4.2.1 Materials and conditions for abrasive blasting

Blast abrasive shall be dry, hard, clean, and free from contaminates. The abrasive shall contain no more than 75 parts per million chlorides by weight.

To achieve the required anchor profile, abrasive particle size shall follow the surface preparation commentary of the SSPC manual as necessary to comply with ISO 8501-1, SSPC-SP-10, surface Preparation Specification – White metal Blast Cleaning, or an equivalent one.

Copper slag, silica sand, or other materials producing silica dust shall not be used when blasting onshore.

Stainless steel requiring coatings shall be blast cleaned using non-metallic blasting abrasive such as Garnet or Aluminum Oxide. Copper slag, steel shots, and steel grits shall not be used in blast cleaning stainless steel surfaces.

The conductivity of abrasive's washing water shall be less than 250µS/cm as per ASTM D4940.

Abrasives shall be sealed in watertight packaging. Any delivered in defective packaging shall be rejected. Products must be stored sheltered from the elements.

The mixture of steel grit and steel shot shall be used for the blasting of carbon steel in the blasting chamber.

Blasting is not permitted if the relative humidity is greater than 85%, or if the surface temperature is less than 3°C above the air dew point.

The compressed air used for blasting shall be free of detrimental amounts of oil and water. A test in accordance with ASTM D4285 shall be conducted to determine the presence of oil or water in compressed air used.

Adequate separators and traps shall be provided, installed in the coolest part of the system. They shall be emptied regularly to prevent carryover of water and oil. Accumulation of oil and moisture shall be removed from the air receiver by regular purging.

Blasting to white metal shall be allowed only during daylight hours. The first primer coat shall be applied to the blasted surface before sundown of the same day. Surfaces that remain uncoated overnight shall be re-blasted to white metal prior to applying the first primer coat.

Where repair or re-coating is carried out on coating systems, the affected area shall be whip blasted to provide an adequate paint key. The blast cleaning shall carry over to the secure surrounding coating for a distance not less than 25 mm. The coating edges shall be chamfered by a method approved by the COMPANY.

Blasting abrasives materials used for blast cleaning of structural steels with a diameter more than 1200mm and welding seams shall be in accordance with specified technical requirements in the Project's document "Specification for abrasive materials".

Văn bản này được xác thực tại https://eoffice.vietsov.com.vn với số định danh: 188/24-CV-PCAM/NIPI
Văn bản này được xác thực tại https://eoffice.vietsov.com.vn với số định danh: 415/25-BB-PCAM/NIPI

4.2.2 Abrasive blasting

All steel surfaces to be coated shall be blast-cleaned to near white metal in accordance with standard ISO 8501 or equivalent.

Surfaces are to be applied shall have anchor patterns in the range of 30-80 microns or 70-120 microns. In general, the blasted surface shall have anchor patterns in accordance with the coating manufacturer's recommendation.

After blast-cleaning, all dust must be removed using a vacuum cleaner before application of the paint. A test in accordance with ISO 8502-3 shall be conducted to determine the quantity of dust.

All blast-cleaned surfaces shall be coated before the deterioration of the "grade of cleanliness". In any case, any surface that has been blast-cleaned shall be coated on the same day.

Surface blasting to near white metal shall extend a minimum of 150mm beyond the area to be coated during the same day. Surface blasting to near white metal shall continue a minimum of 25mm into adjoining previously coated surfaces.

No acid washes, cleaning solutions, solvents, or inhibited washes intended to prevent rusting shall be applied to surfaces after abrasive blasting and prior to the first primer coat application.

The blast cleaning procedure shall be submitted to COMPANY for approval.

4.3 Surface Preparation by Mechanical Power Tools

In the event of abrasive cleaning being impossible or unsuitable, steel surfaces may be mechanically cleaned using power tools such as wire brushes, needle guns, etc., power tool cleaning shall be performed according to grade St.3 of the standard ISO 8501-1 or equivalent.

The surfaces shall be solvent cleaned as specified in standard SSPC SP-1 before cleaning with mechanical power tools.

5 PAINT APPLICATION

5.1 General coating application

Coating shall be applied in accordance with the requirements established by this specification and the recommendations of the coating manufacturer. Any area not specifically covered shall be in accordance with the principles and guidelines set forth in the SSPC Manual.

There should be no deep or detrimental brush marks. Paint shall be worked into all crevices and corners. Runs or sags shall be brushed out.

No coating shall be applied to surfaces that have not been prepared in accordance with the requirements of section 4.

Prior to coating, surfaces blasted to white metal shall be dust-free. The dust remaining on the surfaces shall be removed by dry brushing or by vacuuming with an industrial vacuum cleaner. Pressure air blowing is permitted if suitable precautions are taken to ensure that the air is free of moisture, oil, and other contaminants.

Coatings shall not be applied within 150 mm of unprepared surfaces or within 150 mm of edges prepared for subsequent welding. The area of unprepared or subsequent welding shall be protected with an initial primer coat.

The initial primer coat shall be applied as soon as possible after preparation. In all cases, the primer coat shall be applied during daylight hours on the same day that the surface is prepared.

In general, intermediate and finish coatings shall be applied following the final assembly of component parts. Surfaces shall be in the final configuration.

Văn bản này được xác thực tại https://eoffice.vietsov.com.vn với số định danh: 188/24-CV-PCAM/NIPI
Văn bản này được xác thực tại https://eoffice.vietsov.com.vn với số định danh: 415/25-BB-PCAM/NIPI

Any surfaces inaccessible for proper coating application and/or inspection shall be coated prior to final assembly. Specifically, flange faces and bolt holes shall be coated prior to final installation. The COMPANY representative will designate inaccessible areas.

Prior to applying a succeeding coat, all coatings shall be allowed to dry at site ambient conditions for at least the minimum time specified by the coating manufacturer and not longer than the maximum time for site ambient conditions.

No coating shall be applied over a previous coating that is not thoroughly dry.

Coatings shall be applied by brush to all crevices, corners, edges, and other hard-to-spray areas.

The coating film thickness referred to in this specification shall be the dry film thickness measured by a properly calibrated film thickness gauge and are minimum values.

All areas such as external corners and edges, welds, bolts, nuts, and interstices (excluding galvanized surfaces) shall receive a "stripe" coat prior to application of the specified coat (excluding the inorganic zinc silicate primer) to ensure that these areas have at least the minimum specified film thickness and to ensure continuity of the coating. The "stripe" coat shall be allowed to become touch-dry prior to coating with the specified coat.

All areas that will be subject to welding after painting shall be masked after blast cleaning. Masking shall preferably be with cloth or cloth tape and shall extend at least 50 mm on all sides of the intended weld area.

Nameplates shall be suitably masked before blast cleaning to protect from blasting abrasive and paint.

The cured coatings shall be visually free of pinholes, voids, bubbles, mud cracking, and other "holidays".

Each coat shall be in a proper state of cure or dryness before the application of the next coat. Material shall be dry for re-coating when an additional coat can be applied without the development of any detrimental film irregularities, such as lifting or loss of adhesion of the undercoat. The manufacturer's instructions shall be followed.

When successive coats of the same color have been specified, alternate coats shall be tinted, when practical, sufficiently to produce enough contrast to indicate complete coverage of the surface. When the material is the color of the steel, or when the tinting of the final coat is objectionable, the first coat to be applied shall be tinted. The tinting material shall be compatible with the material and not detrimental to its service life.

Prior to the application of any coat of material, all damage to previous coats shall be touched up with the specified coating. Damage prior to delivery of finish coating shall be re-primed and refinished.

5.2 Spray application

Spray coating shall comply with the following:

- Coating Manufacturer's recommendations.
- Spray equipment Manufacturer's recommendations for the coating material.
- This specification.

Spray equipment

Conventional air spray equipment shall be suitable for the intended purposes. The type of gun, air caps, nozzles, and needles shall comply with the coating manufacturer's application instructions and datasheets.

Văn bản này được xác thực tại https://eoffice.vietsov.com.vn với số định danh: 188/24-CV-PCAM/NIPI
Văn bản này được xác thực tại https://eoffice.vietsov.com.vn với số định danh: 415/25-BB-PCAM/NIPI

Suitable traps and separators shall be installed to remove water, oil, and other contaminants from the air supply. Traps and separators shall be of the continuous-bleed type and shall be checked frequently to prevent carryover.

Suitable regulators and gauges shall be installed in the air supply to the pressure pot and the gun.

Airless spray equipment is acceptable if the minimum requirements established in this specification are met, if airless spray application is recommended by the coating manufacturer, and if specific equipment is approved by the Company.

Application

Prior to application, all coating materials shall be vigorously stirred and/or agitated in spray pots until pigments, vehicles, and catalysis are thoroughly mixed. During application, coatings can be continuously stirred by mechanical spray pot agitators or other approved means if required by the Manufacturers.

Prior to adding new material, lines, pots, and guns shall be thoroughly cleaned following each application. Solvents left in the equipment shall be completely removed before coating the prepared surfaces.

For optimum spraying effectiveness, the pressure on the material in the pot and of the air at the gun shall be adjusted and maintained to deliver the material at the rate specified by the coating manufacturer. Air pressure and volume shall be the minimum required to properly atomize the coating material.

The spray pattern shall be adjusted so that the coating is deposited in uniform layers with the correct wet film thickness.

The spray gun shall be held perpendicular to the surface at all times and at a distance that will ensure depositing a fully wet layer of material on the surface. Arching of the spray gun is not permitted.

Parallel even passes shall be made that overlap the previous spray coating by 50 percent. Large continuous surfaces shall be coated by two passes made at right angles to each other.

All runs, air bubbles, sags, and other imperfections shall be brushed out immediately or the coating shall be removed and the surface re-sprayed.

5.3 Brush application

Coatings shall be applied with a brush in all areas that cannot be spray coated properly.

Brushes shall be of a style, quality, and composition (pure bristle or nylon bristle) that enable proper coating application.

Round or oval brushes are the most suitable for rivets, bolts, irregular surfaces, and rough or pitted steel.

Wide flat brushes are suitable for large flat surfaces. A brush-width greater than 125 mm is not acceptable.

Successive coats shall be applied by crosshatching the previous coat.

Runs, air bubbles, and sags shall be brushed out immediately.

Coating shall be worked into all crevices and corners. Surfaces not accessible to brushes shall be coated with daubers.

5.4 Touch-up and repairs

Touch-up and/or repair of damaged coating shall be carried out to ensure that the coating requirements for the particular surface comply with this Specification.

Văn bản này được xác thực tại https://eoffice.vietsov.com.vn với số định danh: 188/24-CV-PCAM/NIPI
Văn bản này được xác thực tại https://eoffice.vietsov.com.vn với số định danh: 415/25-BB-PCAM/NIPI

Coating damage not exposing steel surfaces shall be cleaned and abraded. Hard edges shall be feathered. The coating shall be made good to the full coating system nominated for the area and complying with this specification.

Coating damage exposing steel surfaces shall be re-cleaned and coated with the suitable method in accordance with the requirements of this specification.

5.5 Drying of coated surfaces

No coat shall be applied until the preceding coat has dried. The material shall be considered dry for re-coating when another coat can be applied without the development of any film irregularities such as lifting or loss of adhesion or undercoats, and the drying time of the applied coat does not exceed the maximum specified for it as a first coat.

No painting shall be force dried under conditions that will cause cracking, wrinkling, blistering, formation of pores, or detrimentally affect the condition of the paint. No drier shall be added to a point on the job unless specifically called for in the manufacturer's specification for the paint.

Paint shall be protected from rain, condensation, and contamination until dry to the fullest extent practicable.

5.6 Galvanizing surface

All galvanizing of structural steel shall conform to ASTM A-123's latest edition and be applied in accordance with ASTM A-385. The minimum zinc coat shall be 0.705 kg/m^2 and the average thickness of galvanized coat shall be a minimum 100µm. No specimen shall be less than 0.67kg/m^2 and galvanized coating thickness shall be less than 95µm. Galvanized steel surfaces for either indoor or outdoor installation shall not be primed or painted unless otherwise noted in the applicable equipment specifications or for safety requirements (e.g. staircases).

Galvanizing damaged through fabrication, erection, assembly, handling, welding or other operations, shall be repaired, preferably with galvanized rods and heat or if this is impossible or impractical, by the proper surface treatment and application of a zinc-rich type of coating.

6 COATING SYSTEMS

The coating systems and painting technological procedures recommended for the new building, modification of offshore platforms below are built based on studying, testing, and applying painting materials for corrosion protection of VSP's offshore platforms. However, these coating systems and painting technological procedures may be updated or modified to meet new technical requirements.

Any changes will be noted in the detailed design documents in each project.

6.1 Coating system for new building and modification

The coating systems below are recommended for newbuilding and modification of platform and pipelines projects, however for each project these coating systems may be reviewed and changed if necessary.

Văn bản này được xác thực tại https://eoffice.vietsov.com.vn với số định danh: 188/24-CV-PCAM/NIPI
Văn bản này được xác thực tại https://eoffice.vietsov.com.vn với số định danh: 415/25-BB-PCAM/NIPI

6.1.1 Coating system №1A

Applied for the metal structures of topside from elevation from +15m to upper (above submaindeck or equivalent decks), wellhead, Xmas-tree and other technological equipment on the topside with operating temperature up to 120°C, excluded bridge structure, vent booms, flare booms, underside submaindecks, upperside decks, etc.

Surface preparation	Coat No.	Generic Paint Type	DFT (µm)
1	*2*	*3*	*4*
Initial painting & Spot repair painting			
Blast cleaning to Sa 2.5/ISO 8501-1 Surface profile: 30 ÷ 80 µm	1st	Zinc Rich Epoxy Primer	50
	2nd	Modified Epoxy	110
	3rd	Modified Epoxy	110
	4th	Polyurethane Finish	50
		Total dry film thickness:	***320***

6.1.2 Coating system №2A

Applied for vent boom, flare boom, bridges, and steel equipment/ piping, structure of stairs, handrails at the jacket zone etc.

Surface preparation	Coat No.	Generic Paint Type	DFT (µm)
1	*2*	*3*	*4*
Initial painting & Spot repair painting			
Blast cleaning to Sa 2.5/ISO 8501-1 Surface profile: 30 ÷ 80 µm	1st	Zinc Rich Epoxy Primer	50
	2nd	Modified Epoxy	175
	3rd	Modified Epoxy	175
	4th	Polyurethane Finish	50
		Total dry film thickness:	**450**

6.1.3 Coating system №3A

Applied for insulated carbon steel surfaces inside rooms.

Surface preparation	Coat No.	Generic Paint Type	DFT (µm)
1	*2*	*3*	*4*
Initial painting & Spot repair painting			
Blast cleaning to Sa 2.5/ISO 8501-1 Surface profile: 30 ÷ 80 µm	1st	Zinc Rich Epoxy Primer	50
	2nd	Modified Epoxy	125
	3rd	Modified Epoxy	125
		Total dry film thickness:	***300***

Văn bản này được xác thực tại https://eoffice.vietsov.com.vn với số định danh: 188/24-CV-PCAM/NIPI
Văn bản này được xác thực tại https://eoffice.vietsov.com.vn với số định danh: 415/25-BB-PCAM/NIPI

6.1.4 Coating system №4A

Applied for facilities with design temperature from 400°C to 600°C.

Surface preparation	Coat No.	Generic Paint Type	DFT (µm)
1	*2*	*3*	*4*
Initial painting & Spot repair painting			
Blast cleaning to Sa 2.5/ISO 8501-1 Surface profile: 25 ÷ 50 µm	1st	Silicon Aluminum	25
	2nd	Silicon Aluminum	25
	3rd	Silicon Aluminum	25
		Total dry film thickness:	***75***

6.1.5 Coating system №5A

Applied for thermal insulated facilities in temperature 120°C<T<400°C.

Surface preparation	Coat No.	Generic Paint Type	DFT (µm)
1	*2*	*3*	*4*
Initial painting & Spot repair painting			
Blast cleaning to Sa 2.5/ISO 8501-1 Surface profile: 30 ÷ 80 µm	1st	Inorganic Zinc Silicate	65
		Total dry film thickness:	**65**

6.1.6 Coating system №6A

Applied for non-insulated facilities with design temperature from 120°C to 400°C.

Surface preparation	Coat No.	Generic Paint Type	DFT (µm)
1	*2*	*3*	*4*
Initial painting & Spot repair painting			
Blast cleaning to Sa 2.5/ISO 8501-1 Surface profile: 30 ÷ 80µm	1st	Inorganic Zinc Silicate	65
	2nd	Silicon Aluminum	25
	3rd	Silicon Aluminum	25
		Total dry film thickness:	**115**

- **Note:** Zinc dust pigment of inorganic zinc rich silicate primer shall be in compliance with ASTM D520 type II.

Văn bản này được xác thực tại https://eoffice.vietsov.com.vn với số định danh: 188/24-CV-PCAM/NIPI
Văn bản này được xác thực tại https://eoffice.vietsov.com.vn với số định danh: 415/25-BB-PCAM/NIPI

6.1.7 Coating system №7A

Applied for thermal insulated facilities with design temperature up to 120°C and thermal insulated stainless-steel facilities 60°C ≤T<110°C.

Surface preparation	Coat No.	Generic Paint Type	DFT (µm)
1	*2*	*3*	*4*
Initial painting & Spot repair painting			
- **Carbon steel surfaces:** Blast cleaning to Sa 2.5/ISO 8501-1 Surface profile: 30 ÷ 80µm - **Stainless steel surface:** Sweep blast with dry, non-iron containing grit to provide a suitable anchor profile	1st	Epoxy Phenolic	100
	2nd	Epoxy Phenolic	100
		Total dry film thickness:	***200***

6.1.8 Coating system №8A

Applied for upperside of decks, helidecks, underside submaindeck, conductor in air, conductor guider, riser hook-up, transition stub pile and other facilities from the top of Jacket to the first deck of Topside (under) exception to small metallic structures as per: electrical supports, piping supports, etc....

Option 1: Coating system №8A-1

Surface preparation	Coat No.	Generic Paint Type	DFT (µm)
1	*2*	*3*	*4*
Initial painting & Spot repair painting			
Blast cleaning to Sa 2.5/ISO 8501-1 Surface profile: 30 ÷ 80 µm	1st	Zinc Rich Epoxy Primer	50
	2nd	Glass flake epoxy	400
	3rd	Glass flake epoxy	500
	4th	Polyurethane Finish	50
		Total dry film thickness:	***1000***

Option 2: Coating system №8A-2

Surface preparation	Coat No.	Generic Paint Type	DFT (µm)
1	*2*	*3*	*4*
Initial painting & Spot repair painting			
Blast cleaning to Sa 2.5/ISO 8501-1 Surface profile: 30 ÷ 80 µm	1st	Zinc Rich Epoxy Primer	50
	2nd	Glass flake epoxy	900
	3rd	Polyurethane Finish	50
		Total dry film thickness:	***1000***

Văn bản này được xác thực tại https://eoffice.vietsov.com.vn với số định danh: 188/24-CV-PCAM/NIPI
Văn bản này được xác thực tại https://eoffice.vietsov.com.vn với số định danh: 415/25-BB-PCAM/NIPI

6.1.9 Coating system №9A

Applied for Anti-skid walkways (if any)

Option 1: Coating system №9A-1

Surface preparation	Coat No.	Generic Paint Type	DFT (µm)
1	*2*	*3*	*4*
Initial painting & Spot repair painting			
Blast cleaning to Sa 2.5/ISO 8501-1 Surface profile: 30 ÷ 80 µm	1st	Zinc Rich Epoxy Primer	50
	2nd	Glass flake epoxy	500
	3rd	Glass flake epoxy	200
	-	*Anti-skid powder*	-
	4th	Glass flake epoxy	200
	5th	Polyurethane Finish (marking No.1)	50
	6th	Polyurethane Finish (marking No.2)	50
		Total dry film thickness:	***1000 -1050***

Option 2: Coating system №9A-2

Surface preparation	Coat No.	Generic Paint Type	DFT (µm)
1	*2*	*3*	*4*
Initial painting & Spot repair painting			
Blast cleaning to Sa 2.5/ISO 8501-1 Surface profile: 30 ÷ 80 µm	1st	Zinc Rich Epoxy Primer	50
	2nd	Glass flake epoxy	700
	-	*Anti-skid powder*	-
	3rd	Glass flake epoxy	200
	4th	Polyurethane Finish (marking No.1)	50
	5th	Polyurethane Finish (marking No.2)	50
		Total dry film thickness:	***1000 -1050***

Note:

- The anti-skid powder should be broadcasted uniformly at 3kg /m^2.
- The size of anti-skid powder shall be from mesh #8 to mesh #16 or recommendation of the manufacturer(s).
- The anti-skid painting system in the coating system №9A can be changed following the recommendation by the manufacturer.

Văn bản này được xác thực tại https://eoffice.vietsov.com.vn với số định danh: 188/24-CV-PCAM/NIPI
Văn bản này được xác thực tại https://eoffice.vietsov.com.vn với số định danh: 415/25-BB-PCAM/NIPI

6.1.10 Coating system №10A

For all galvanized steel surfaces, brass piping system, etc.

Surface preparation	Coat No.	Generic Paint Type	DFT (µm)
1	*2*	*3*	*4*
Initial painting & Spot repair painting			
Sweet blast or Degrease galvanized surfaces to SP1-SSPC	1st	Special Epoxy Paint	50
	2nd	Modified Epoxy	150
	3rd	Polyurethane Finish	50
		Total dry film thickness:	***250***

Note: The epoxy primer is to be recommended by the manufacturer(s) for suitable application on galvanized steel surfaces.

6.1.11 Coating system №11A

For non-insulated stainless-steel facilities 60°C ≤T<110°C.

Surface preparation	Coat No.	Generic Paint Type	DFT (µm)
1	*2*	*3*	*4*
Initial painting & Spot repair painting			
Sweep blast with dry, non-iron containing grit to provide a suitable anchor profile	1st	High Solid Epoxy	125
	2nd	Polyurethane Finish	50
		Total dry film thickness:	***175***

6.1.12 Coating system №12A

{DELETED}

6.1.13 Coating system №13A

For insulated and non-insulated stainless-steel facilities ≥110°C.

Surface preparation	Coat No.	Generic Paint Type	DFT (µm)
1	*2*	*3*	*4*
Initial painting & Spot repair painting			
Sweep blast with dry, non-iron containing grit to provide a suitable anchor profile	1st	Silicone Aluminum	25
	2nd	Silicone Aluminum	25
		Total dry film thickness:	***50***

Văn bản này được xác thực tại https://eoffice.vietsov.com.vn với số định danh: 188/24-CV-PCAM/NIPI
Văn bản này được xác thực tại https://eoffice.vietsov.com.vn với số định danh: 415/25-BB-PCAM/NIPI

6.1.14 Coating system №14A

Applied for steel structures of jacket, main structures of boatlanding and sea deck, conductor, conductor guider, and other facilities from the elevation (-4.5m) to up to the top of jacket.

Option 1: Coating system №14A-1

Surface preparation	Coat No.	Generic Paint Type	DFT (µm)
1	*2*	*3*	*4*
Initial painting & Spot repair painting			
Blast cleaning to Sa 2.5/ISO 8501-1 Surface profile: 30 ÷ 80 µm	1st	Zinc Rich Epoxy Primer	50
	2nd	Glass Flake Epoxy	400
	3rd	Glass Flake Epoxy	500
	4th	Glass Flake Epoxy	500
	5th	Polyurethane Finish	50
		Total dry film thickness:	***1500***

Option 2: Coating system №14A-2

Surface preparation	Coat No.	Generic Paint Type	DFT (µm)
1	*2*	*3*	*4*
Initial painting & Spot repair painting			
Blast cleaning to Sa 2.5/ISO 8501-1 Surface profile: 30 ÷ 80 µm	1st	Zinc Rich Epoxy Primer	50
	2nd	Glass Flake Epoxy	700
	3rd	Glass Flake Epoxy	700
	4th	Polyurethane Finish	50
		Total dry film thickness:	***1500***

6.1.15 Coating system №15A

{DELETED}

Văn bản này được xác thực tại https://eoffice.vietsov.com.vn với số định danh: 188/24-CV-PCAM/NIPI
Văn bản này được xác thực tại https://eoffice.vietsov.com.vn với số định danh: 415/25-BB-PCAM/NIPI

6.1.16 Coating system №16A

Applied for inside of open drain, closed tanks, air receiver, etc.

Surface preparation	Coat No.	Generic Paint Type	DFT (µm)
1	*2*	*3*	*4*
Initial painting & Spot repair painting			
Blast cleaning to Sa 2.5/ISO 8501-1 Surface profile: 30 ÷ 80 µm	1st	Phenolic Epoxy	150
	2nd	Phenolic Epoxy	150
		Total dry film thickness:	***300***

6.1.17 Coating system №17A

Applied for inside of crude oil separators, test separators, gas separators, etc.

Surface preparation	Coat No.	Generic Paint Type	DFT (µm)
1	*2*	*3*	*4*
Initial painting & Spot repair painting			
Blast cleaning to Sa 3.0/ISO 8501-1 Surface profile: 70 ÷ 100 µm	1st	Epoxy novolacs / Ceramic or equivalent	300
	2nd	Epoxy novolacs / Ceramic or equivalent	300
		Total dry film thickness:	***600***

6.1.18 Coating system №18A

For inside of washing water tanks (carbon steel), inside drinking water tank (carbon steel).

Surface preparation	Coat No.	Generic Paint Type	DFT (µm)
1	*2*	*3*	*4*
Initial painting & Spot repair painting			
Blast cleaning to Sa 2.5/ISO 8501-1 Surface profile: 30 ÷ 80 µm	1st	Solvent Free Epoxy Tank/ Drinking Water Epoxy Tank	150
	2nd	Solvent Free Epoxy Tank/ Drinking Water Epoxy Tank	150
		Total dry film thickness:	***300***

Notes: All products used in washing water tanks, drinking water tanks shall be approved by VSP and accompanied with a Health Certificate issued by authorized organization.

Văn bản này được xác thực tại https://eoffice.vietsov.com.vn với số định danh: 188/24-CV-PCAM/NIPI
Văn bản này được xác thực tại https://eoffice.vietsov.com.vn với số định danh: 415/25-BB-PCAM/NIPI

6.1.19 Coating system №19A

For inside chemical storage tanks (carbon steel).

Surface preparation	Coat No.	Generic Paint Type	DFT (µm)
1	*2*	*3*	*4*
Initial painting & Spot repair painting			
Blast cleaning to Sa 2.5/ISO 8501-1 Surface profile: 30 ÷ 80 µm	1st	Chemical Resistant Epoxy Tank	100
	2nd	Chemical Resistant Epoxy Tank	100
	3rd	Chemical Resistant Epoxy Tank	100
		Total dry film thickness:	***300***

6.1.20 Coating system №20A

For subsea pipeline, spools, subsea templates and other submersed facilities (not be insulated).

Surface preparation	Coat No.	Generic Paint Type	DFT (µm)
1	*2*	*3*	*4*
Initial painting & Spot repair painting			
Blast cleaning to Sa 2.5/ISO 8501-1 Surface profile: 30 ÷ 80 µm	1st	Zinc Rich Epoxy Primer	50
	2nd	Glass Flake Epoxy	450
		Total dry film thickness:	***500***

6.1.21 Coating system №21A

Applied for risers, J-tube and claims, conductors underwater (not be insulated).

Option 1: Coating system №21A-1

Surface preparation	Coat No.	Generic Paint Type	DFT (µm)
1	*2*	*3*	*4*
Initial painting & Spot repair painting			
Blast cleaning to Sa 2.5/ISO 8501-1 Surface profile: 30 ÷ 80 µm	1st	Zinc Rich Epoxy Primer	50
	2nd	Glass Flake Epoxy	400
	3rd	Glass Flake Epoxy	500
	4th	Glass Flake Epoxy	500
		Total dry film thickness:	***1450***

Văn bản này được xác thực tại https://eoffice.vietsov.com.vn với số định danh: 188/24-CV-PCAM/NIPI
Văn bản này được xác thực tại https://eoffice.vietsov.com.vn với số định danh: 415/25-BB-PCAM/NIPI

Option 2: Coating system №21A-2

Surface preparation	Coat No.	Generic Paint Type	DFT (µm)
1	*2*	*3*	*4*
Initial painting & Spot repair painting			
Blast cleaning to Sa 2.5/ISO 8501-1 Surface profile: 30 ÷ 80 µm	1st	Zinc Rich Epoxy Primer	50
	2nd	Glass Flake Epoxy	700
	3rd	Glass Flake Epoxy	700
		Total dry film thickness:	***1450***

6.1.22 Coating system №22A

For marking.

Surface preparation	Coat No.	Generic Paint Type	DFT (µm)
1	*2*	*3*	*4*
Initial painting			
Surface preparation by sanding size mesh 16 to 20	1st	Polyurethane Finish	50
		Total dry film thickness:	***50***

6.1.23 Coating system №23A

{DELETED}

6.1.24 Coating system №24A

{DELETED}

6.2 Coating systems for restoration the existing painting systems

{DELETED}

Văn bản này được xác thực tại https://eoffice.vietsov.com.vn với số định danh: 188/24-CV-PCAM/NIPI
Văn bản này được xác thực tại https://eoffice.vietsov.com.vn với số định danh: 415/25-BB-PCAM/NIPI

7 TECHNOLOGICAL PROCEDURES

7.1 For new building and modification

№.	List of working	Percent of area (%)
1.	**Coating systems No.1A, 2A, 8A-1, 14A-2, 21A-1**	
	Surface preparation by blast cleaning to cleanliness Sa 2.5 according to standard ISO 8501-1. Surface profile after blast cleaning is in the range 30÷80 microns.	100%
	Application of 1st coat by airless spray.	100%
	Stripe coating by brush for all difficult access spots, angles, corners, protrusions, welding seams, etc.	3%
	Cleaning any contaminants with fresh air before application of 2nd coat.	100%
	Application of 2nd coat by airless spray.	100%
	Stripe coating by brush for all difficult access spots, angles, corners, protrusions, welding seams, etc.	3%
	Cleaning any contaminants with fresh air before application of 3rd coat.	100%
	Application of 3rd coat by airless spray.	100%
	Stripe coating by brush for all difficult access spots, angles, corners, protrusions, welding seams, etc.	3%
	Removing any contaminants with fresh air before application of 4th coat.	100%
	Application of 4th coat by airless spray.	100%
	Stripe coating by brush for all difficult access spots, angles, corners, protrusions, welding seams, etc.	3%
	Repair welding seams & coating injuries when installation and translocation (10% area).	
	Degreasing surfaces by oil and grease remove thinner in accordance with the standard SSPC-SP1.	100%
	Surface preparation by blast cleaning to cleanliness Sa 2.5 according to standard ISO 8501-1. Surface profile after blast cleaning is in the range 30÷80 microns.	100%
	Application of 1st coat by airless spray.	100%
2	**Coating systems No.3A, 6A, 8A-2, 21A-2**	
	Surface preparation by blast cleaning to cleanliness Sa 2.5 according to standard ISO 8501-1. Surface profile after blast cleaning is in the range 30÷80 microns.	100%
	Application of 1st coat by airless spray.	100%

Văn bản này được xác thực tại https://eoffice.vietsov.com.vn với số định danh: 188/24-CV-PCAM/NIPI
Văn bản này được xác thực tại https://eoffice.vietsov.com.vn với số định danh: 415/25-BB-PCAM/NIPI

№.	List of working	Percent of area (%)
	Stripe coating by brush for all difficult access spots, angles, corners, protrusions, welding seams, etc.	3%
	Cleaning any contaminants with fresh air before application of 2nd coat.	100%
	Application of 2nd coat by airless spray.	100%
	Stripe coating by brush for all difficult access spots, angles, corners, protrusions, welding seams, etc.	3%
	Removing any contaminants with fresh air before application of 3rd coat.	100%
	Application of 3rd coat by airless spray.	100%
	Stripe coating by brush for all difficult access spots, angles, corners, protrusions, welding seams, etc.	3%
	Repair welding seams & coating injuries when installation and translocation (10% area).	
	Degreasing surfaces by oil and grease remove thinner in accordance with the standard SSPC-SP1.	100%
	Surface preparation by blast cleaning to cleanliness Sa 2.5 according to standard ISO 8501-1. Surface profile after blast cleaning is in the range 30÷80 microns.	100%
	Application of 1st coat by airless spray.	100%
3	**Coating system No.4A**	
	Surface preparation by blast cleaning to cleanliness Sa 2.5 according to standard ISO 8501-1. Surface profile after blast cleaning is in the range 25÷50 microns.	100%
	Application of 1st coat by airless spray.	100%
	Stripe coating by brush for all difficult access spots, angles, corners, protrusions, welding seams, etc.	3%
	Cleaning any contaminants with fresh air before application of 2nd coat.	100%
	Application of 2nd coat by airless spray.	100%
	Stripe coating by brush for all difficult access spots, angles, corners, protrusions, welding seams, etc.	3%
	Removing any contaminants with fresh air before application of 3rd coat.	100%
	Application of 3rd coat by airless spray.	100%
	Stripe coating by brush for all difficult access spots, angles, corners, protrusions, welding seams, etc.	3%
	Repair welding seams & coating injuries when installation and translocation (10% area).	

Văn bản này được xác thực tại https://eoffice.vietsov.com.vn với số định danh: 188/24-CV-PCAM/NIPI
Văn bản này được xác thực tại https://eoffice.vietsov.com.vn với số định danh: 415/25-BB-PCAM/NIPI

№.	List of working	Percent of area (%)
	Degreasing surfaces by oil and grease remove thinner in accordance with the standard SSPC-SP1.	100%
	Surface preparation by blast cleaning to cleanliness Sa 2.5 according to standard ISO 8501-1. Surface profile after blast cleaning is in the range 25÷50 microns.	100%
	Application of 1st coat by airless spray.	100%
	Coating system No.5A	
	Surface preparation by blast cleaning to cleanliness Sa 2.5 according to standard ISO 8501-1. Surface profile after blast cleaning is in the range 30÷80 microns.	100%
	Application of 1st coat by airless spray.	100%
	Stripe coating by brush for all difficult access spots, angles, corners, protrusions, welding seams, etc.	3%
	Repair welding seams & coating injuries when installation and translocation (10% area).	
	Degreasing surfaces by oil and grease remove thinner in accordance with the standard SSPC-SP1.	100%
	Surface preparation by blast cleaning to cleanliness Sa 2.5 according to standard ISO 8501-1. Surface profile after blast cleaning is in the range 30÷80 microns.	100%
	Application of 1st coat by airless spray.	100%
	Coating system No.7A, 11A, 13A	
	- Surface preparation by blast cleaning to cleanliness Sa 2.5 according to standard ISO 8501-1. Surface profile after blast cleaning is in the range 30÷80 microns applied for carbon steel surfaces. - Or sweep blast with dry, non-iron containing grit to provide a suitable anchor profile applied for stainless steel surfaces.	100%
	Application of 1st coat by airless spray.	100%
	Stripe coating by brush for all difficult access spots, angles, corners, protrusions, welding seams, etc.	3%
	Cleaning any contaminants with fresh air before application of 2nd coat.	100%
	Application of 2nd coat by airless spray.	100%
	Stripe coating by brush for all difficult access spots, angles, corners, protrusions, welding seams, etc.	3%
	Repair welding seams & coating injuries when installation and translocation (10% area).	

Văn bản này được xác thực tại https://eoffice.vietsov.com.vn với số định danh: 188/24-CV-PCAM/NIPI
Văn bản này được xác thực tại https://eoffice.vietsov.com.vn với số định danh: 415/25-BB-PCAM/NIPI

№.	List of working	Percent of area (%)
	Degreasing surfaces by oil and grease remove thinner in accordance with the standard SSPC-SP1.	100%
	- Surface preparation by blast cleaning to cleanliness Sa 2.5 according to standard ISO 8501-1. Surface profile after blast cleaning is in the range 30÷80 microns applied for carbon steel surfaces. - Or sweep blast with dry, non-iron containing grit to provide a suitable anchor profile applied for stainless steel surfaces.	100%
	Application of 1st coat by airless spray.	100%
	Coating system No.9A-1	
	Surface preparation by blast cleaning to cleanliness Sa 2.5 according to standard ISO 8501-1. Surface profile after blast cleaning is in the range 30÷80 microns.	100%
	Application of 1st coat by airless spray.	100%
	Stripe coating by brush for all difficult access spots, angles, corners, protrusions, welding seams, etc.	3%
	Cleaning any contaminants with fresh air before application of 2nd coat.	100%
	Application of 2nd coat by airless spray.	100%
	Stripe coating by brush for all difficult access spots, angles, corners, protrusions, welding seams, etc.	3%
	Cleaning any contaminants with fresh air before application of 3rd coat.	100%
	Application of 3rd coat by airless spray.	100%
	Broadcast uniformly the anti-skid powder (mesh #8 to #16) at 3 kg per 1 m^2 of on the wetted surface of 3rd layer.	100%
	Application of 4th coat by airless spray after broadcasting the antiskid powder.	100%
	Stripe coating by brush for all difficult access spots, angles, corners, protrusions, welding seams, etc.	3%
	Removing any contaminants with fresh air before application of 5th coat.	100%
	Application of 5th coat by airless spray.	100%
	Stripe coating by brush for all difficult access spots, angles, corners, protrusions, welding seams, etc.	3%
	Cleaning any contaminants with fresh air before application of 6th coat.	10%
	Application of 6th (Escape direction arrow) coat by airless spray.	5%
	Repair welding seams & coating injuries when installation and translocation (10% area).	
	Degreasing surfaces by oil and grease remove thinner in accordance with the standard SSPC-SP1.	100%

Văn bản này được xác thực tại https://eoffice.vietsov.com.vn với số định danh: 188/24-CV-PCAM/NIPI
Văn bản này được xác thực tại https://eoffice.vietsov.com.vn với số định danh: 415/25-BB-PCAM/NIPI

№.	List of working	Percent of area (%)
	Surface preparation by blast cleaning to cleanliness Sa 2.5 according to standard ISO 8501-1. Surface profile after blast cleaning is in the range 30÷80 microns.	100%
	Application of 1st coat by airless spray.	100%
	Coating system No.9A-2	
	Surface preparation by blast cleaning to cleanliness Sa 2.5 according to standard ISO 8501-1. Surface profile after blast cleaning is in the range 30÷80 microns.	100%
	Application of 1st coat by airless spray.	100%
	Stripe coating by brush for all difficult access spots, angles, corners, protrusions, welding seams, etc.	3%
	Cleaning any contaminants with fresh air before application of 2nd coat.	100%
	Application of 2nd coat by airless spray.	100%
	Broadcast uniformly the anti-skid powder (mesh #8 to #16) at 3 kg per 1 m^2 of on the wetted surface of 2nd layer.	100%
	Application of 3rd coat by airless spray after spraying antiskid powder material.	100%
	Stripe coating by brush for all difficult access spots, angles, corners, protrusions, welding seams, etc.	3%
	Removing any contaminants with fresh air before application of 4th coat.	100%
	Application of 4th coat by airless spray.	100%
	Stripe coating by brush for all difficult access spots, angles, corners, protrusions, welding seams, etc.	3%
	Cleaning any contaminants with fresh air before application of 5th coat.	10%
	Application of 5th (Escape direction arrow) coat by airless spray.	5%
	Repair welding seams & coating injuries when installation and translocation (10% area).	
	Degreasing surfaces by oil and grease remove thinner in accordance with the standard SSPC-SP1.	100%
	Surface preparation by blast cleaning to cleanliness Sa 2.5 according to standard ISO 8501-1. Surface profile after blast cleaning is in the range 30÷80 microns.	100%
	Application of 1st coat by airless spray.	100%
	Coating system No.10A	
	Sweet blast with abrasive materials or Degreasing surfaces by oil and grease remove thinner in accordance with the standard SSPC-SP1.	100%

Văn bản này được xác thực tại https://eoffice.vietsov.com.vn với số định danh: 188/24-CV-PCAM/NIPI
Văn bản này được xác thực tại https://eoffice.vietsov.com.vn với số định danh: 415/25-BB-PCAM/NIPI

№.	List of working	Percent of area (%)
	Application of 1st coat by airless spray.	100%
	Stripe coating by brush for all difficult access spots, angles, corners, protrusions, welding seams, etc.	3%
	Cleaning any contaminants with fresh air before application of 2nd coat.	100%
	Application of 2nd coat by airless spray.	100%
	Stripe coating by brush for all difficult access spots, angles, corners, protrusions, welding seams, etc.	3%
	Removing any contaminants with fresh air before application of 3rd coat.	100%
	Application of 3rd coat by airless spray.	100%
	Stripe coating by brush for all difficult access spots, angles, corners, protrusions, welding seams, etc.	3%
	Repair welding seams & coating injuries when installation and translocation (10% area).	
	Degreasing surfaces by oil and grease remove thinner in accordance with the standard SSPC-SP1.	100%
	Surface preparation by blast cleaning to cleanliness St 3 or Sa 2.5 according to standard ISO 8501-1. Surface profile after blast cleaning is in the range 30÷80 microns.	100%
	Application of 1st coat by airless spray.	100%
	Coating system No.14A-1	
	Surface preparation by blast cleaning to cleanliness Sa 2.5 according to standard ISO 8501-1. Surface profile after blast cleaning is in the range 30÷80 microns.	100%
	Application of 1st coat by airless spray.	100%
	Stripe coating by brush for all difficult access spots, angles, corners, protrusions, welding seams, etc.	3%
	Cleaning any contaminants with fresh air before application of 2nd coat.	100%
	Application of 2nd coat by airless spray.	100%
	Stripe coating by brush for all difficult access spots, angles, corners, protrusions, welding seams, etc.	3%
	Cleaning any contaminants with fresh air before application of 3rd coat.	100%
	Application of 3rd coat by airless spray.	100%
	Stripe coating by brush for all difficult access spots, angles, corners, protrusions, welding seams, etc.	3%
	Cleaning any contaminants with fresh air before application of 4th coat.	100%
	Application of 4th coat by airless spray.	100%

Văn bản này được xác thực tại https://eoffice.vietsov.com.vn với số định danh: 188/24-CV-PCAM/NIPI
Văn bản này được xác thực tại https://eoffice.vietsov.com.vn với số định danh: 415/25-BB-PCAM/NIPI

№.	List of working	Percent of area (%)
	Stripe coating by brush for all difficult access spots, angles, corners, protrusions, welding seams, etc.	3%
	Removing any contaminants with fresh air before application of 5th coat.	100%
	Application of 5th coat by airless spray.	100%
	Stripe coating by brush for all difficult access spots, angles, corners, protrusions, welding seams, etc.	3%
	Repair welding seams & coating injuries when installation and translocation (10% area).	
	Degreasing surfaces by oil and grease remove thinner in accordance with the standard SSPC-SP1.	100%
	Surface preparation by blast cleaning to cleanliness Sa 2.5 according to standard ISO 8501-1. Surface profile after blast cleaning is in the range 30÷80 microns.	100%
	Application of 1st coat by airless spray.	100%
	Coating system No.16A, 18A, 20A	
	Surface preparation by blast cleaning to cleanliness Sa 2.5 according to standard ISO 8501-1. Surface profile after blast cleaning is in the range 30÷80 microns.	100%
	Application of 1st coat by airless spray.	100%
	Stripe coating by brush for all difficult access spots, angles, corners, protrusions, welding seams, etc.	3%
	Cleaning any contaminants with fresh air before application of 2nd coat.	100%
	Application of 2nd coat by airless spray.	100%
	Stripe coating by brush for all difficult access spots, angles, corners, protrusions, welding seams, etc.	3%
	Coating system No.17A	
	Surface preparation by blast cleaning to cleanliness Sa 3.0 according to standard ISO 8501-1. Surface profile after blast cleaning is in the range 70÷100 microns.	100%
	Application of 1st coat by airless spray.	100%
	Stripe coating by brush for all difficult access spots, angles, corners, protrusions, welding seams, etc.	3%
	Cleaning any contaminants with fresh air before application of 2nd coat.	100%
	Application of 2nd coat by airless spray.	100%

Văn bản này được xác thực tại https://eoffice.vietsov.com.vn với số định danh: 188/24-CV-PCAM/NIPI
Văn bản này được xác thực tại https://eoffice.vietsov.com.vn với số định danh: 415/25-BB-PCAM/NIPI

№.	List of working	Percent of area (%)
	Stripe coating by brush for all difficult access spots, angles, corners, protrusions, welding seams, etc.	3%
	Coating system No.19A	
	Surface preparation by blast cleaning to cleanliness Sa 2.5 according to standard ISO 8501-1. Surface profile after blast cleaning is in the range 30÷80 microns.	100%
	Application of 1st coat by airless spray.	100%
	Stripe coating by brush for all difficult access spots, angles, corners, protrusions, welding seams, etc.	3%
	Cleaning any contaminants with fresh air before application of 2nd coat.	100%
	Application of 2nd coat by airless spray.	100%
	Stripe coating by brush for all difficult access spots, angles, corners, protrusions, welding seams, etc.	3%
	Removing any contaminants with fresh air before application of 3rd coat.	100%
	Application of 3rd coat by airless spray.	100%
	Stripe coating by brush for all difficult access spots, angles, corners, protrusions, welding seams, etc.	3%
	Coating system No.22A	
	Surface preparation by sanding size mesh 16 to 20.	100%
	Application of 1st coat by airless spray.	100%

7.2 For restoration the existing painting coatings

{DELETED}

8 WORKMANSHIP

The Contractor shall comply with the minimum requirements established by this specification but has exclusive control over the detailed manner for performing the required work. The Contractor shall work in a careful, diligent, and prudent manner and shall achieve results that exhibit high-quality craftsmanship.

The Contractor only used trained persons for blasting, a painting application, supervision, and inspection. Certificates of personnel shall be submitted to COMPANY for approval before any painting application work commences.

Prior to beginning work, all Contractor personnel shall be thoroughly familiar with the material, equipment, this specification, and all applicable standards and codes.

Care shall be exercised at all times to prevent splashing, dropping, spillage, and overspray of coating and abrasive materials.

Văn bản này được xác thực tại https://eoffice.vietsov.com.vn với số định danh: 188/24-CV-PCAM/NIPI
Văn bản này được xác thực tại https://eoffice.vietsov.com.vn với số định danh: 415/25-BB-PCAM/NIPI

The Contractor shall protect all equipment, walls, floors, ceilings, and other surfaces from damage by coating materials and other contaminants.

The Contractor shall clean any accidentally applied material from all surfaces. No permanent color or stain shall remain from accidentally applied materials.

Good housekeeping procedures shall be established and followed at all times. When work is complete, the Contractor shall leave all work areas in a condition equal to that when work began.

9 INSPECTION / TESTING AND ACCEPTANCE CRITERIA

The Contractor shall perform inspection and testing activities complying with requirements of this Specification and/or recommendation's paint manufacturer.

An inspection and test plan shall be prepared by the Contractor and shall be submitted to COMPANY for approval.

As a requirement for each painting system the following aspects of the work shall be documented and recorded in the painting inspection report, but not limited:

- Quality of surface preparation (surface profile, cleanliness, etc.)
- Dry film thickness of each coat.
- Dry film thickness of the total system.
- Coating supplier.
- Coating batch number.
- Ambient conditions, including ambient temperature, surface temperature, dew point, and relative humidity.
- The visual aspect of the coating.
- The coating inspection reports should be signed by the COMPANY's nominated representative.

9.1 Inspection equipment used for inspection

The Contractor is responsible for the quality of equipment to be used during the qualification test. All equipment shall be calibrated by the authorized organization.

Certificate of calibration of equipment and list of equipment shall be submitted to COMPANY for approval before test panel/ inspection activities commence.

9.2 Ambient atmospheric and surface temperature conditions

Prior to the commencement of any coating operation, the surface temperature, ambient temperature, dew point, and relative humidity shall be measured and recorded in the daily report.

9.3 Surface preparation quality

The cleanliness of the cleaned surface shall be Sa 2 ½ according to the standard ISO 8501-1 or equivalent.

Anchor profile shall be compliance the requirement ranges of each coating system.

9.4 Assessment of dust on the cleaned surface

The cleaned surface shall be inspected for dust rate in accordance with standard ISO 8502-3. Dust quantity rating 2 for dust size class 2 is acceptable.

9.5 Contamination chlorides test

Chloride content shall be tested in accordance with standard ISO 8502-6 and 8502-9, with acceptance **criteria mentioned in table 9-1.**

Văn bản này được xác thực tại https://eoffice.vietsov.com.vn với số định danh: 436/25-BB-PCAM/NIPI

9.6 Wet film thickness measurement

Wet film thickness shall be measured and recorded for each coat application by the wet film combs such as Elcometer112 or equivalent.

9.7 Dry film thickness measurement

Each individual coat and coat system shall be measured for DFT. Method for measuring DFT shall be in accordance with ISO 19840 using appreciate thickness gauge such as Elcometer 456 or equivalent.

9.8 Adhesion strength test

A pull-off test is used for evaluating the adhesion of the coating system to the metal substrates. The pull-off test shall be carried out in accordance with ASTM D4541 using hydraulic adhesion tester PAT or equivalent. The coating system to be tested shall be fully cured, clean, dry, and free of oil, dirt, and other contaminants.

9.9 Cross-cut test for Adhesion

A cross-cut test shall be performed on the coating systems having a total DFT less than 200µm in accordance with standard ASTM D3359.

9.10 Holiday test

A holiday test shall be performed on the final coat of the system in accordance with NACE SP 0188. The coating system to be tested shall be fully cured, clean, dry, and free of oil, dirt, and other contaminants.

High voltage spark testing shall perform on the coating systems having a total DFT above 200µm with the suggestion of NACE RP 0188. Low voltage wet sponge testing shall perform on the coating system having a total DFT of less than 200µm.

Văn bản này được xác thực tại https://eoffice.vietsov.com.vn với số định danh: 188/24-CV-PCAM/NIPI
Văn bản này được xác thực tại https://eoffice.vietsov.com.vn với số định danh: 415/25-BB-PCAM/NIPI

9.11 Acceptance Criteria

Table 9-1: Inspection plan and acceptance criteria

Test type	Testing method	Acceptance criteria	Frequency
Surface preparation			
Environment conditions	N/A	3°C above dew point. Relative humidity: max 85%.	Before start of each shift
Visual examination	Visual for sharp edges, weld splatter slivers, rust grade	No defects	100% surface
Cleanliness	ISO 8501-1	Grade Sa $2^{1/2}$ /St3	100% surface
Dust test	ISO 8502-3	Rate 2 for dust size class 2	
Chloride	ISO 8502-5	- **Max. 30mg/m² at workshop** - **Max 50mg/m² at site**	Random
Conductivity	ISO 8502-9	Max. 70 µS/cm	Random
Paint application and final inspection/testing.			
Environment conditions	N/A	- 3°C above dew point. - Relative humidity: max 85%. - Ambient temperature max. 50°C or temperature recommended by the Coating manufacturer	Before start of each shift
Visual examination of coating	Visual to determine curing, contamination, pin holes sagging, appearance, color, etc.	No defect	100% surface
Holiday detection	NACE SP 0188	No holiday	As per coating system specification
Adhesion	ASTM D4541	As per requirement of each coating system	On test panel
Dry film thickness	ISO 19840	ISO 19840	5 readings per 10m².

10 TEST PLAN

The paint materials that have been tested and used successfully on the VSP's offshore platforms can be accepted without additional testing requirements. However, a test panel can be required before painting application.

The test plan can be required for new paint materials of all paint manufacturers, which have not been tested or used successfully in VSP. The quality of the testing painting systems shall be reviewed and qualified in accordance with the requirements offered in section 7 and Table 10-1

Văn bản này được xác thực tại https://eoffice.vietsov.com.vn với số định danh: 188/24-CV-PCAM/NIPI
Văn bản này được xác thực tại https://eoffice.vietsov.com.vn với số định danh: 415/25-BB-PCAM/NIPI

of this specification. The coating systems will be measured, checked, and assessed when cured completely (in normal condition, the complete cured time required is about 7 days). The results of the test panel shall be documented in suitable inspection forms.

The other paint manufacturers mentioned above can provide the test panel reports that have been approved by the Project's owners for the constructions similar to VSP's offshore platforms operating in the marine environment of Vietnam and suitable to the requirements of the test panel mentioned in this document.

Table 10-1: Testing and acceptance criteria for new painting materials

Test type	Testing method/ Equipment	Acceptance criteria	Remarks
Coating system	-	Section 6 "Coating systems"	
Cleaning method and cleaning grade of steel panels	Visual	Sa $2^{1/2}$, ISO 8501-1	
Surface profile of steel panels	Elcometer 124 or equivalent.	As per painting schedules	
Dry film thickness	ISO 19840	In accordance with section 6 "Coating systems"	Minimum 5 readings per $10m^2$.
Visual examination of coating	Pin holes, sagging, color, etc.	No defect	
Holiday detection	NACE SP 0188	No holiday	
Adhesion (Spots test)	ASTM D4541	≥5.0MPa (Applied for hydraulic adhesion tester)	For Epoxy/polyurethane coatings with DFT from 200 to 450µm
		≥7.0MPa (Applied for hydraulic adhesion tester)	For Glass Flake Epoxy coatings with DFT≥500µm

Notes: MEK test can be checked at the site to determine the proper degree of cure for a power coating primer in order to maximize the inter-coat adhesion properties between itself and final coat, so that, MEK test is for information only, because these properties have been tested and e valuated by adhesion test mentioned in table 10-1 above.

11 HEALTHS AND SAFETY

All Coating Contractors using this standard shall have a section in their Safety Management System devoted to industrial coating applications. This shall include, but not be limited to the following sections:

11.1 General

Handling of coatings, thinners, and chemicals must be treated with due regard to environmental protection and suitable to VSP's instruction VSP-000-ATMT-435.

Văn bản này được xác thực tại https://eoffice.vietsov.com.vn với số định danh: 188/24-CV-PCAM/NIPI
Văn bản này được xác thực tại https://eoffice.vietsov.com.vn với số định danh: 415/25-BB-PCAM/NIPI

The waste disposal shall be collected to the prescribed area.

A safe area shall be established and clearly identified for handling and storage of all flammable materials and for waste disposal. No source of ignition shall be permitted within the safe area at any time.

The Contractor shall take proper precautions before and during work in confined areas and/or in areas with the potential for fire or explosion.

If possible, all electrical equipment shall be located remote from the hazardous work area in a well-ventilated, non-hazardous space.

All electrical equipment intended for such areas shall be of an approved type in accordance with the area classification requirements established by the relevant IEC codes (International Electro-technical Commission).

The Contractor shall provide and maintain fire extinguishers approved for the expected fire hazard near or in all work areas.

The Contractor shall provide and install sufficient scaffolding and staging for easy access during surface preparation, coating application, and inspection of all surfaces.

The supporting structure and the surface or item being worked on shall be constructed so that workers will have free use of body and arms.

The structures shall be provided with safety features that will help prevent accidents. The structures shall comply with all applicable OSHA requirements.

The Contractor shall exercise extreme care and caution when working in the vicinity of in-service facilities. All valves, switches, and controls shall remain unmoved and undisturbed.

11.2 Handling of chemicals

Material Safety Data Sheets (MSDS's) shall always be available for review during transport and prior to the application of the product. Manufacturer's instructions for the safe handling of products shall be followed to minimize the risk of injury or creation of health hazards to personnel.

Handling of coatings and chemicals shall be carried out with due care and diligence.

The correct use of personal protection equipment (PPE) shall be employed during the coating preparation and application.

Disposal of chemicals must be treated with due regard to environmental protection.

11.3 Spray and blasting operations

Abrasive blasting and spray coating shall be performed with approved equipment by experienced operators.

The Contractor shall provide all operators with hoods for protection against abrasives and with paint masks that are OSHA-approved for extended service. The hoods and masks shall be worn at all times when work is being done.

Pressure vessels, such as sand hoppers and compressed-air volume tanks, shall be protected from over-pressurization with automatic pressure-relieving devices.

Pressure nozzle controls shall be of the fail-safe, dead-man type.

Pressure hose connections shall incorporate a positive locking mechanism to prevent accidental disconnection (For example, quick-connect connections shall have a safety wire in place).

Adequate ventilation shall be provided in confined areas with blowers capable of a minimum of 12 air changes per hour.

Văn bản này được xác thực tại https://eoffice.vietsov.com.vn với số định danh: 188/24-CV-PCAM/NIPI
Văn bản này được xác thực tại https://eoffice.vietsov.com.vn với số định danh: 415/25-BB-PCAM/NIPI

Spray and blasting equipment in confined areas shall be securely grounded to dissipate static electrical charges.

The hand tool shall be made of spark-proof materials.

11.4 Pressure equipment

The safe operation of all pressure equipment shall be detailed in the Contractor's Safety Management System and show how, when, and records for the inspection of such equipment. The equipment and associated connections shall be regularly inspected and well maintained.

11.5 Earthling connection

All equipment, particularly nozzles, tanks, piping, and cable trays, and cable ladders shall be earthed to prevent sparking and electric shocks from static electricity.

11.6 Breathing Apparatus

Appropriate air-fed masks should be used during blasting and coating operations. Other personnel in the vicinity shall wear suitable protective masks or respirators when necessary. Adequate ventilation must be provided in confined spaces and when using air-fed masks in these areas, attention should be paid to the possibility of explosive vapor build-up. As a minimum, dust, rust, and vapors should be directed away from the operator by wind or extraction fan.

12 HANDLING AND SHIPPING OF FINISHED PRODUCT

Once all coatings have been applied and fully cured the equipment shall be packed by the Contractor ready for shipment. Packaging shall allow for the shipment method and route to ensure that no mechanical or other damage to the coating will occur in transit. The Contractor shall be responsible for any coating repairs, which are found necessary upon receipt and un-packaging of the goods.

13 COLOR CODE

Unless otherwise noted, the color of the external coatings for different items on the newbuilding and modification of the platform shall be specified as followings:

Table 13-1: Color code

№	Description	Color	RAL code
1	*2*	*3*	*4*
I.	**PIPELINES**		
1.	Subsea pipeline, spools, risers, J-tubes and claims	Yellow signal	RAL 1003
II.	**JACKET AND MSF STRUCTURES**		
1.	Panels, plans, boat landing, walkway, caissons, conductors, conductor guider, clamps, MSF structures, handrails, stairs, treads, drilling deck, grating deck on sea-deck, etc....	Yellow signal	RAL 1003
III.	**TOPSIDE STRUCTURES**		
1.	Rows, bracings, columns, underside and structures of decks, walls, flare, supports, escape route, bridge	Yellow signal	RAL 1003

Văn bản này được xác thực tại https://eoffice.vietsov.com.vn với số định danh: 188/24-CV-PCAM/NIPI
Văn bản này được xác thực tại https://eoffice.vietsov.com.vn với số định danh: 415/25-BB-PCAM/NIPI

№	Description	Color	RAL code
1	*2*	*3*	*4*
	structures, walk way on bridge, supports of cable trays, etc. External wall of shelters and living quarter, stairs, treads, handrails, kick plates. Riser hook-up.		
2.	Upside of decks (main deck, platform deck, upper decks, etc.), hatch covers, grating decks on topside, floor room, roof decks.	Green	RAL 6002
3.	Interior of rooms, stores without thermal insulation	White	RAL 9010
4.	Escape route marking (direction arrow)	Red signal	RAL 3020
5.	Upside deck of Helideck	Green	BS 381C:267
6.	Markings on the Helideck	Red signal	BS 381C: 537
		Yellow	BS 381C: 309
		White	RAL 9010
IV.	**PIPING SYSTEMS AND EQUIPMENT**		
1.	Gas piping system, water piping system, crude oil piping system and other piping systems, piping supports, risers, mechanical equipment, pumps, electrical motors, generators, heat exchangers, **wellheads, Xmas-tree**, electrical panels, valves, tanks, vessels, SKID's foundation, crane boom, crane body, monorails, etc.	Yellow signal	RAL 1003
2.	Firefighting systems, **safety valves (PSV) and actuator of shutdown valves (SDV)**	Red signal	RAL 3020

14 MARKING FOR PIPING SYSTEMS

Marking and identification shall be in accordance with the document "Specification for Piping Fabrication, Installation, inspection and testing, No. VSP-NIPI-TS-PI1-SP-05" in the latest version.

Văn bản này được xác thực tại https://eoffice.vietsov.com.vn với số định danh: 435/25-BB-PCAM/NIPI